SYLLABUS

UNIT I STONES – BRICKS – CONCRETE BLOCKS

Stone as building material – Criteria for selection – Tests on stones – Deterioration and Preservation of stone work – Bricks – Classification – Manufacturing of clay bricks – Tests on bricks – Compressive Strength – Water Absorption – Efflorescence – Bricks for special use – Refractory bricks – Cement, Concrete blocks – Light weight concrete blocks.

UNIT II LIME – CEMENT – AGGREGATES – MORTAR

Lime – Preparation of lime mortar – Cement – Ingredients – Manufacturing process – Types and Grades – Properties of cement and Cement mortar – Hydration – Compressive strength – Tensile strength – Fineness– Soundness and consistency – Setting time – Industrial byproducts – Fly ash – Aggregates – Natural stone aggregates – Crushing strength – Impact strength – Flakiness Index – Elongation Index – Abrasion Resistance – Grading – Sand Bulking.

UNIT III CONCRETE

Concrete – Ingredients – Manufacturing Process – Batching plants – RMC – Properties of fresh concrete – Slump – Flow and compaction Factor – Properties of hardened concrete – Compressive, Tensile and shear strength – Modulus of rupture – Tests – Mix specification – Mix proportioning – BIS method – High Strength Concrete and HPC – Self compacting Concrete – Other types of Concrete – Durability of Concrete.

UNIT IV TIMBER AND OTHER MATERIALS

Timber – Market forms – Industrial timber– Plywood – Veneer – Thermacole – Panels of laminates – Steel – Aluminum and Other Metallic Materials – Composition – Aluminium composite panel – Uses – Market forms – Mechanical treatment – Paints – Varnishes – Distempers – Bitumens.

UNIT V MODERN MATERIALS

Glass – Ceramics – Sealants for joints – Fibre glass reinforced plastic – Clay products – Refractories – Composite materials – Types – Applications of laminar composites – Fibre textiles – Geomembranes and Geotextiles for earth reinforcement.

TEXT BOOKS:

1. Varghese.P.C, "Building Materials", PHI Learning Pvt. Ltd, New Delhi, 2012.
2. Rajput. R.K., "Engineering Materials", S. Chand and Company Ltd., 2008.
3. Shetty.M.S., "Concrete Technology (Theory and Practice)", S. Chand and Company Ltd.,2008.
4. Gambhir.M.L., "Concrete Technology", 3rd Edition, Tata McGraw Hill Education, 2004
5. Duggal.S.K., "Building Materials", 4th Edition, New Age International , 2008.

REFERENCES:

1. Jagadish.K.S, "Alternative Building Materials Technology", New Age International, 2007.
2. Gambhir. M.L., & Neha Jamwal., "Building Materials, products, properties and systems", Tata McGraw Hill Educations Pvt. Ltd, New Delhi, 2012.
3. IS456 – 2000: Indian Standard specification for plain and reinforced concrete, 2011

4. IS4926–2003 : Indian Standard specification for ready–mixed concrete, 2012
5. IS383–1970: Indian Standard specification for coarse and fine aggregate from natural Sources for concrete, 2011
6. IS1542–1992: Indian standard specification for sand for plaster, 2009

UNIT-1

STONES-BRICKES-CONCRETE BLOCKES

PART – A (2marks)

1. **Define Construction Materials?**

Construction Materials or Building Materials are defined as the materials used for various engineering purposes such as building constructions etc.

2. State any four characteristics of the good building stone?

I. A good building stone should have good appearance and colour.
II. It should have heavy weight.
III. It should not contain pores.
IV. The crushing strength should not less than 100N/mm^2 for a good building stone.

3. List any four tests on stone?

Following tests are conducted in stones, to determine the various properties.

i) Hardness Test
ii) Impact Test
iii) Attrition Test
iv) Crushing Test

4. Define Efflorescence?

Efflorescence is defined as the white coloured appearance on the surface of the bricks or concrete, due to the crystalline deposit.

5. State various cause of deterioration of stones?

1. Rain.
2. Temperature Variation.
3. Alternative wetness and Drying.
4. Vegetable Growth.

6. How Living Organisms affects the stonework?

Living Organisms (like Worms and bacteria) act upon stones and deteriorate them. These organisms make holes in stones and thus weaken them. They also secrete organic acids, which corrode the stones.

7. **What is Preservation of stones?**

Preservation of stones is the preventing process of stones from deterioration by external agencies.

8. Name any four preservatives used in the preservation of stones?

- Coal tar
- Linseed oil
- Paint
- Paraffin
- Alum Soap Solution
- Baryta Solutions

9. Name some of the requirements of a good preservative?

- It should not develop objectionable odor and colour.
- It should penetrate the stone surface easily.
- It should be easily applied on stone surface easily.
- It should be impervious.

10. What are factors Influencing the selection of preservatives?

- Type of the stone
- Durability of the preservative
- Colour of the preservative
- Environmental Conditions (temperature, frost etc)
- Cost factors etc.

11. What are the constituents of good brick earth?

- Alumina
- Silica
- Lime
- Iron oxide
- Magnesia

12. State the Steps carried out in the manufacturing process of bricks?

- Prepration of clay
- Moulding
- Drying
- Burning

13. What are Kilns? State its types?

Kilns are the permanent structure or arrangements, used for large scale unite in the manufacturing process of bricks, for burning purposes. Based on the period of functioning, Kilns are classified as,

- Intermittent Kilns
- Continuous Kilns

14. Explain the factors affecting the Quality of bricks?

- Composition of Brick Earth
- Preparation of Clay and Blending
- Type of the Moulding
- Process of drying and stacking
- Type of Kiln used
- Burning and cooling methods

- Loading and unloading of Bricks

15. What are the suitability Tests for bricks?

In order to determine the suitability of brick for construction work, the following test are carried out.

- Absorption Test
- Crushing strength test
- Hardness Test
- Pressure of (soluble) salt Test
- Size and shape Test
- Soundness Test
- Structure Test

16. Explain the types of Bricks?

Following are the classification of the Bricks

1. Classification of Bricks based on burning process
2. Classification of bricks based on quality

Basedon the Burning process bricks are classified into,

1. Burnt Bricks
2. Unburnt Bricks (or) Sun dried bricks

17. What are the Bullnose Bricks and Quoin?

A brick moulded with a rounded angle is called **Bullnose Brick,** and it is used for a rounded quoin.

A connection which is formed when a wall taken a turn is called **Quoin**.

18. What are Concrete Blocks and state its uses?

Concrete blocks(or **Concrete bricks**) are the solid cement concrete bricks made up of cement, aggregates and water.

Concrete blocks are used in the construction of wall for larger scale for mass housings, industrial structure, foundations of heavy structures and power plants etc.

19. What are light weight concrete blocks?

Light- weight Bricks is defined as the type of brick which includes an expanding agent in it that increases the volume of the mixture, while reading the dead weight.

20. What are the advantages of Light weight Blocks?

Following are the various advantages of light weight blocks

- Light in weight
- High Thermal Insulation
- High Fire Protection
- High sound insulation
- Lower Water Absorption
- Eco Friendly blocks
- Economical

PART – B (16marks)

1. Write the Criteria for Selection of Stones Criteria for selection of stones:

Stone should be selected according to their use. In any case, it should be durable and free from defects.

1. Stone for masonry.

Any type of stone can be used for rough work like random rubble. However, for ornamental works and dressing the stones to different finishes (as for ashlar work) we have to use stones suitable for these purposes. Soft stones like limestones and sandstones can be dressed more easily than granite. For ornamental works in temples or heavy engineering works like facing work in docks and harbours or bridge piers, we will prefer well- dressed granite.

2. Stone for pavements.

Generally, hardstones of any type can be used for paving walkways, driveways, etc.

3. Stone for flooring.

Stones are used for heavy duty flooring in many situations. Nowadays, with the help of machines, we can produce large slabs for flooring even from hard rocks like granite. In some locations like bathrooms, marble floorings are preferred. Materials like marble, kotastones can take polish and are prefered in many places. They can also be obtained in pleasing colours. Cuddapa slabs are popular for using in kitchen platforms, shelves, etc.

4. Stones for facing work in buildings.

The facing stones should have attractive colours. It should be durable. Both impervious stones like granites, marbles and pervious stones like limestones are used. The impervious varieties are preferred as they do not get change in colour with time, especially in an industrial atmosphere.

5. Stones for concrete aggregates.

Hard igneous rocks like granite are always preferred for high strength concrete as needed in prestressed concrete. Aggregates of moderate strength like limestones are also useful for making concrete of moderate strength

2. Enumerate the characteristics to be considered in selection of stones. Characteristics to be considered in selection of stones:

The desirable qualities depend on the use of the stone. Hard stones are used for heavy engineering works like building quay walls. Many types of stones are used as aggregates for concrete. Stones like marbles are used for appearance. Now, we will deal with the important general properties to took for.

1. Crushing strength. The following are the ultimate strengths of some of the common types of stones as compared to 15 to 20 N/mm 2 for ordinary concrete.

(a) Igneous rocks

Granite 80 to 150 N/mm 2 Basalt 150 to 200 N/mm 2 Trap 300 to 350 N/mm 2

(b) Metamorphic rocks

Gneiss 200 to 350 N/mm 2 Slate 75 to 200 N/mm 2

(c) Sedimentary rocks

Limestone 50 to 60 N/mm 2 Sandstone 50 to 70 N/mm 2 Shale 1 to 10 N/mm 2

(d) Other types

Laterite 2 to 3 N/mm 2

Most of the stones have more than the required compressive strength for masonry, compared to hand -made bricks available in India with a strength of only 2 to 10 N/mm2. clip

2. Appearance. Appearance is very important for stones used for decorative Works and the facing work of buildings.

3. Density. It should be dense. Its specific gravity should he greater than 2.7

4. Durability. This property is very important, especially when used in exposed conditions,

5. Easiness of dressing. This property depends on its usage. Stones used for tacitly, work should have easiness to get dressed to the required texture.

6. Fire resistance. Argillaceous stones like limestones resist fire better than the stones containing quartz which explodes on heating. Thus, limestone resists fire up to 800°C.whereas granites with quartz minerals can stand only up to 600°C.

7. Fracture. The grains should be well cemented and sharp if we examine a fractured surface.

8. Impact resistance. It is a measure of toughness of the stone. An impact test value of 19 is good and a value below 13 shows bad quality of stone

9. Hardness. This test gives resistance against wear as in road works. Hardness greater than 17 is good and less than 14 is considered as poor

10. Resistance to wear. Resistance to wear is indicated by attrition test. It is also an important quality for use as coarse aggregate in concrete. For a good facing stone, its value can be as low as 3. However, for use as coarse aggregate a much higher value is needed.

11. Seasoning. Many types of stones fresh from the quarry contain moisture (quarry sap). They can be dressed easily at freshly quarried stage. Such stones should be dressed and kept apart for some time for the moisture to evaporate before they are used. (For example, laterite is a special stone which require good seasoning. When quarried, it is soft, and it hardens only when exposed to the atmosphere. The iron compounds get oxidized and give it the necessary strength. Hence, laterite should always be dressed as soon as it is quarried and stored away from rain for some time before it is used on the works.)

12. Texture. It should have a pleasing texture and should be free from cracks and cavities.

13. Water absorption. For durability the percentage of absorption should be less than 0.6 per cent. Otherwise, in exposed situations, water can seep into the stone and leach out the salts.

14. Weathering. It should weather well as shown by its use in similar types of old buildings in which they have weathered well

3. Write short notes on deterioration of stones work and preservation of stones
Deterioration of stones

The following are the main causes for deterioration of stones:

1. Alternate wetting and drying.
2. Alternate freezing and thawing.
3. Deleterious substances present in the air such as in the atmosphere near the seashores and industrial areas.
4. Living organisms, growth of vegetation (like seedlings of banyan trees that grow from droppings of birds) and living worms or bacteria that live in the stone can cause decay.
5. Movement of chemicals between materials. This occurs when limestones and sandstones are used together. The granular limestone can absorb magnisium sulphate present in other rocks if they are used adjacent to the other.
6. Nature of mortar. If the mortar has chemicals, they can affect the stonework.
7. Temperature variation. Large variations of temperature and alternate heating and cooling can cause expansion and contraction which cause cracking of stone.
8. Waterfalls and rainfalls. Falling of water from great heights or falling of water containing chemicals (like rainwater absorbing gases from the atmosphere) can cause deterioration of stones.
9. Wind. Winds blowing for a long time can over deserts contain sand and dust, which passing over the stones for a long lime can cause their deterioration.

Preservation of stones

There are two aspects to be considered under this heading. Firstly, the precautions to be taken before and during the construction of stonework and secondly, the steps to be taken after the stonework has been completed.

1. Precautions during Construction

The precautions to be taken during the construction are the following:

The type and size of stones selected should be good. Only compact and durable stones should be selected for construction. The size of these stones should be as large as possible to minimize the number of joints. The stones should be well seasoned and washed clean before they are used. The construction should be up to the required specifications. The stones should be placed on their natural beds and the joints completely filled with mortar so that there is no cavity. External renderings like pointing is preferred for exposed stones. Otherwise, it should be plastered with high -quality plaster.

2. Methods of Preservation of Completed Stonework

Stonework after construction also needs careful attention if they are to be preserved in their natural condition. The art of preserving ancient stone statues in museums consists of special techniques and is a specialized subject. For preserving stonework in buildings which tend to deteriorate with time, we usually resort to coating the stone with one of the following preservatives.

a) Linseed oil. Raw linseed oil is light in colour while boiled linseed oil is dark and hence discolour the stone.

b) Solution of alum and soap. Alum and soap in 40 to 60 proportions respectively dissolved in water can be applied on the stone to act as a protective coating.

c) Solution of barium hydroxide (Baryta). If the decay is due to $CaSO_4$, then this treatment is effective. The reaction is as follows

d) $Ba(OH)_2 + CaSO_4 = BaSO_4 + Ca(OH)_2$

The barium sulphate is insoluble and the $Ca(OH)_2$ absorbs carbon dioxide and gives strength to the stonework.

e) Paraffin. It is used alone or dissolved in naphtha as a paint medium. However it may changes the colour of the stone.

f) Paint. Painting preserves the stone but changes the colour of the stone. If applied under pressure, it can till the pores in the stone. The paint should be neutral and should not react with the stone. Modern colorless paints are also available.

g) Coal tar. Even though it is listed as a preservative, it is a highly objectionable material to be used as it completely changes the colour of the stone. The chemicals in coal tar may not also suit some types of stones.

3. Conservation of Granite

As there are a large number of art works and monuments made of granite in this world, a large amount of research has gone into methods of conservation of granite. In general the following three methods are commonly used depending on the state of existence of the granite work to be made good:

Consolidation using consolidates

Injection using injection materials and

Fillers using filling materials.

The binding medium used is ethylsilicate, acrylic resin, epoxy resins and others. Filler materials like suitably coloured sands from 0.1 mm to 2 mm are also added if needed. This art of conservation of stones and especially granite is extensively practiced in the laborations attached to museums.

4. Explain physical tests on stones

Physical tests on stones:

Building stones are to be tested for the following tests:

1. Absorption test
2. Smith's test
3. Toughness test

4. Moh's scale of hardness test
5. Acid test
6. Crystallization test
7. Attrition test (see also Chapter 8 on coarse aggregates)
8. Crushing test
9. Freezing and thawing test (for cold countries)
10. Hardness test (see Chapter 8 on coarse aggregates)
11. Impact test (see Chapter 8 on coarse aggregates)
12. Microscopic test

Tests 1 to 6 are simple tests that can be carried out in the field and are usually made on building stones.

Tests 7 to 12 are carried out in a laboratory and are often performed to find suitability of coarse aggregate for concrete. These tests are briefly described below:

SIMPLE FIELD TESTS:

i. Absorption test This is a simple test that should be done on all stones. It consists of keeping a sample of rock of about 50 gm in distilled water and finding the water absorbed in 24 hours. It should not exceed 0.6 per cent.

ii. Smith's test This test is to determine the deterioration of stones when immersed in water. A sample of the stone is placed in distilled water in a glass vessel and vigorously stirred. It is kept in water for at least 24 hours. If the water turns muddy, then the stone contains earthy substances. Some very consolidated sands which look like sandstones simply slump under water in this test. We should ensure that all stones we use pass this test.

iii. Toughness test. Hit the stone with a hammer and find how tough it is to break it with the hammer.

iv. Moh's scale of hardness test. One simple way of describing strength of stones is in terms of hardness of the surface. We scratch the stone with a penknife and classify hardness by Moh's scale of hardness. It is based on the relative abrasiveness of minerals (the softest being talc and the hardest diamond), the scale being divided into 10 scales as shown below:

1. Talc
2. Gypsum
3. Calcite
4. Fluorspar
5. Apatite
6. Orthoclase feldspar
7. Quartz
8. Topaz
9. Corundum (Saphire)
10. Diamond

v. Acid test this is to test the presence of poorly weathering calcium carbonates in sandstones. The test consists of placing a cube of the stone weighing about 50 to 100 gm in one per cent hydrochloric acid for 7 days. A good building stone should be free from powder formation on the surface of the cube and the sharp edges should not be broken up after the above immersion.

vi. Crystallization test This test consists in immersing a sample of stone (cubes of say 40 mm) in 14 per cent sodium sulphate solution for two hours and then drying it in an oven at 100°C. This procedure is repeated for at least five times. The loss of weight and the presence of cracking are noted. There should not be any visible defect formed, and the loss in weight should be minimal.

LABORATORY TESTS:

i. Attrition test (as described under coarse aggregates). This is carried out in a Deval testing machine (see Chapter 8, Section 8.5.8).

ii. Crushing test This test consists of finding the compressive strength of a stone cube 40 mm in size in a compression -testing machine. The rate of loading used is 140 kg per cm- per minute.

iii. Freezing and thawing test. This test is applicable to the regions where the temperature can go below the freezing point. It consists of keeping a specimen of the stone in water for 24 hours and then freezing it at —12°C for 24 hours. It is then thawed. This is repeated at least seven times after which the specimens are carefully examined for any damage.

iv. Hardness test This test is different from the attrition test. Here, we use the Dorry's testing machine. A cylinder of 25 mm of the rock is rubbed against a steel disc sprinkled with coarse sand. The specimen is given a pressure of 1.25 kg. After 1000 revolutions, the loss in weight is determined.

v. Microscopic test in this test, thin sections of the stone are taken and placed under the microscope to study its grain size, mineral constituents and presence of harmful materials.

5. What are the 3types of classification of bricks?

CLASSIFICATION OF BRICKS

Bricks can be classified in three ways namely according to their use, or its general physical requirements and strength or as in IS classification. The classification of bricks on the basis of these criteria is as follows:

a) According to use. Bricks are, sometimes, broadly classified according to their uses as:

i. Common bricks
ii. Engineering bricks (special bricks for carrying heavy loads)
iii. Facing bricks
iv. Fire bricks

v. Specials (special shapes)

b) According to general physical requirements. In some specifications, clay bricks are classified as Class I, Class II and Class III according to their general physical properties indicated in Table 2.2. As can be seen, the bricks of different classes differ in their water absorption property. No good brick should disintegrate when immersed in water even for a long period. Such disintegration shows lack of good burning.

c) **I.S. Classification of bricks.** Indian Standards I.S. 3102-1971 "Classification of burnt clay solid bricks" classifies bricks according to their strengths

UNIT – 2

LIME-CEMENT-AGGREGATES-MORTAR

PART – A (2marks)

1. What is Lime?

Lime is a locally available binding material (or cementing material) and it is used as an alternative for cementing material.

2. Define Calcination of lime?

Calcination is defined as the process of heating the lime to redness (contact with air). Calcination removes the moisture contents and carbon-di-oxide from hydrated lime, as follows.

$$CaCO_3 \longrightarrow CaO \text{ (Quick Lime)} + CO_2$$

3. What is Quick Lime and Slacked Lime?

The lime which is obtained by the calcination of pure limestone($CaCO_3$) is called quick lime or caustic lime.

The quick lime obtained from the pure lime stone in the kilns is called Lumplime.

Slacked lime is the hydrated Calcium Oxide, Ca $(OH)_2$obtained from the absorption of water

The plastic mass of lime which results from the slaked lime in the presence of sufficient quality of water is called Putty.

4. What is Slaking?

Slaking is defined as the process of chemical combination of quick lime with sufficient quality of water for reducing the heat and to get the powder form of lime.

$$CaO + H_2O \longrightarrow Ca(OH)_2 + \text{Heat}$$

5. What is Pozzolana?

The volcanic dust containing 80% clay with lime, magnesia and iron oxide in varying proportions is called Pozzolana.

6. What are the constituents of lime stone?

Following are the main constituents of lime.

- Clay
- Soluble Silica
- Magnesium Carbonate ($MgCo_3$)
- Metallic Oxide and Alkalies
- Sulphates
- Iron compounds
- Carbonaceous Matter

7. State some of the properties of good lime?

- High workability
- Strength to masonry
- Provides good plasticity
- High initial setting and hardening
- High resistance to moisture
- Low shrinkage
- High durability
- Good bonding properties

8. What are the types of lime?

Limes are classified as,

1. Fat Lime
2. Hydraulic Lime
3. Poor Lime

9. What is lime mortar?

Following are requirements of good mortar.

- It should develop good bond between the building units (such as bricks, stone etc.,)
- It should be capable of developing desired stresses.
- It should be of water impermeable.
- It should not affect the durability of materials with which it comes into contact.
- It should not develop cracks in the joints.
- It should have sufficient heat resistance.
- It should be free from dust and inorganic matters
- It should set quickly and increase the speed of the construction activities.

10. What is Cement and state its types?

Cement is the binding materials, obtained by burning and crushing of clay stones containing Calcium Carbonate and Magnesium Carbonate. ($CaCO_3$) and ($MgCO_3$). Cement can be classified as,

1. Natural cement
2. Artificial cement

11. What are the normal ingredients of Cement?

NO.	Ingredients	%	Range	Important Functions
1.	Lime (CaO)	62%	62% to 67%	Gives strength, regulating the setting time.
2.	Silica(SiO_2)	22%	17% to 25%	Gives strength
3.	Alumina (AL_2O_3)	5%	3% to 8%	Increasing the setting property
4.	Calcium Sulphate ($CaSO_4$)	4%	3% to 4%	Increasing the initial setting time
5.	Iron Oxide (Fe_2O_3)	3%	3% to 4%	Gives colour, Hardness and strength.
6.	Magnesia (MgO)	2%	1% to 3%	Provides hardness and strength.
7.	Sulphur(S)	1%	1% to 3%	Provides soundness for cement.
8.	Other Substances	1%	0.2% to 1%	Changes the Properties

12. What are the desirable properties of cement?

- High strength to masonry
- Easy Hardening.
- High Plasticity.
- Good Building material.
- High workability.
- High moisture resistant.

13. What is setting of cement?

Setting of the cement is defined as the process of the formation of complicated chemical compounds when the cement is added with water. Setting of cement is a continuous process. When the water is mixed with cement, cement paste will be formed and the paste is gradually thickening till it achieves a hard-solid material.

14. Define setting time of cement.

Setting time of the cement is defined as the time required for stiffening of cement paste to a defined consistency. It is indirectly related to the chemical reaction of water to form Aluminium Silicate compound.

15. What are the chemical compounds formed during the setting action of cement?

- C_3A - Tri Calcium Aluminate ($3CaO.AL_2O_3$)

- C_4AF - Tetra Calcium Alumino - Ferrite ($4CaO, AL_2O_3, Fe_2O_3$)
- C_3S - Tri Calcium -Silicate ($3CaO.SiO_2$)
- C_2S - Di Calcium Silicate ($2CaO.SiO_2$)

16. State the important processes carried out in the manufacturing of ordinary Cement?

Mixing of raw materials.

- Burning.
- Grinding.

17. What is packing of cement?

Packing is the process of storing the cement either in gunny bags or in conventional jute in order to prevent the chemical reaction of cement with atmospheric moisture.

18. What is Hydration of cement?

The chemical reaction takes place between cement and water is called Hydration of cement react chemically with various complicated chemical complicated.

19. Define setting and Hardening of cement?

Setting is the process of changing of cement from liquid to paste state and the gaining of initial strength. Hardening is the process of strength gain for a set cement paste.

20. What is Quick Lime and Slacked Lime?

The lime which is obtained by the calcination of pure limestone($CaCO_3$) is called quick lime or caustic lime.

The quick lime obtained from the pure lime stone in the kilns is called Lumplime.

Slacked lime is the hydrated Calcium Oxide, $Ca(OH)_2$obtained from the absorption of water

The plastic mass of lime which results from the slaked lime in the presence of sufficient quality of water is called Putty.

PART – B (16marks)

1. List the composition of Portland cement.

COMPOSITION OF PORTLAND CEMENT

The cementing properties of cement develop due to chemical reaction of the above— mentioned compounds. Depending on the raw materials, type of firing, etc., the proportion of these various constituents can be made to differ and the resulting product will also give differing properties. Of all the main constituents of cement, C 3 S and CA control the setting and early strengths and heat of hydration. The compound GIS is responsible for strength at longer ages. C3A also generates higher heat than other compounds. Increase in C 3 S results in higher long-term strength and high heat of hydration. If C3 A and C 4 AF are kept low, then the resistance to chemicals such as sulphates is increased. Portland cement itself is produced in different types by varying the proportions of the constituents of cement.

1. We should note the difference between setting of lime (given in Chapter 4) and setting of cement. Cement after its final set can set strong under water. Whereas the cementing property of lime depends on its exposure to air, the cementing property of Portland cement is due to the chemical reaction between its various constituents in the presence of moisture It is absolutely essential that moisture should be present in the initial stages for the development of strength of cement. This process of supplying this kind of environment is known as curing. Thus, curing of the products of cement is very important in all the works connected with cement. like construction of masonry. Plastering, concreting. Etc

2. The total percentage of C 2 S and C A S in all types of Portland cements is around 70 percent, so that even though the strength development of two cements at early stages may be different, the final strength obtained after long periods of time may not be different. However, removal of formwork, prestressing of concrete depends to a large extent on the early strength of concrete.

3. When producing low -heat Portland cement the percentage of C 2 S is increased and that of C A S and C 3 A is decreased. This type of cement is of particular use in construction of dams, massive foundation, etc. to reduce the production of heat.

4. Reducing C 3 A increases. Sulphate resistance but the 7 day and 28 day strengths also get lowered as compared to the ordinary Portland cement. Sulphate -resisting Portland cement has less than 5% C 3 A. This type of cement is recommended for sewer works.

5. Rapid hardening cements compared to ordinary cements have more or less the same composition except that the latter is more finely ground and may sometimes contain higher percentage of C 3 S. The increased fineness increases the 7 day strength.

WHITE CEMENT

White cement is very much used for making of mosaic tiles, coloured cements, etc. White cement is made from chalk or limestone or shelllime free from impurities and white clays like china clay (kaoline clay) free from oxides of iron, manganese, etc. Shelllime is on ideal raw material. In some factories, oil is used instead of coal as fuel. Grinding is also done in a special mill to avoid iron oxide. White cement is the base for all coloured cements. However, all concretes made from coloured cement tend to fade with time due to deposition of lime salts on the surface. Hence, the best coloured concretes are those in which naturally coloured aggregates are relied upon for the colour effect and the colour of the cement should play only a secondary role.

2. Explain types of cement produced in India. TYPES OF CEMENT PRODUCED IN INDIA

Ordinary portland cement (OPC) and Portland pozzolana cement (PPC), (the latter being a mixture of Portland cement and 15 to 35% pozzolanas,) are the types of cements prescribed in India. Even though formerly it was mandatory in India to indicate on the cement bags the nature of its contents (OPC or PPC) nowadays this is not legally necessary. Only the grade of the cement is marked on the bag. Most cements sold in India is Portland cement mixed with various proportions of pozzolanes like flyash. Cement is specified by its grade, i.e. the mortar cube strength in 1N/mm2 in 28 days. (We use compression strength of 1:3 cement mortar as cubes of 50 cm 2 area (7.06 cm) in 28 days for defining strength.) Thus. Grade -33 cement (C-33) means cement with

standard mortar cube strength of 33 Islimm 2 in 28 days. In India, cement is available in the market in bags of 50 kg. The tolerance allowed is -±2.5% in weight per hag and an in overall tolerance of ±0.5% per wagon load of 20 to 25 tonnes. In case of massive works like dams, it is to be supplied in bulk and is stored in large bins at the site. The following ale the IS specifications.

I. Ordinary portland cement (OPC) in 3 grades

(a) Grade 33 IS 269-1989 designated as C-33

(b) Grade 43 — IS 8112-1989 designated as C-43

(c) Grade 53 — IS 12269-1987 designated as C-53

2. Portland pozzolana cement (PPC) (a mixture of OPC and Pozzolanas)

(a) IS 1489 (Pan 0-1991 (flyash-based)

(b) IS 1489 (Part II) -1991 (calcined clay -based)

3. Sulphate -resisting cement—IS 12330-1988
4. Portland slag cement—IS 455-1989 (PSC)
5. Low -heat cement—IS 12600-1989
6. Rapid -hardening cement—IS 8041-1990
7. Concrete sleeper -grade cement—IS T40-1985
8. Coloured cement—White Cement—IS 8042-1989
9. Oil well cements—IS 8229-1986
10. Hydrophobic cement -1S 8043-1991
11. Masonry cements—IS 3466-1988
12. High -alumina cements—IS 6452-1989
13. Super-sulphated cements—IS 6909-1990
14. Expansive cement
15. Quick -setting cement.

The more important types of cement are the following:

1. Ordinary Portland cement (OPC). About 70% of cement produced in India was of this category and in 3 grades, viz. Grade 33, 43 and 53 as already stated above. However pure portland cement is generally not marketed nowadays in bags.

2. Portland pozzolana cement (PPC). This type of cement is the most common type available now in the market and is made by blending 10 to 25% reactive pozzolana like flyash or calcined clay with OPC. Addition of pozzolana makes cement sensitive to curing and PPC requires longer curing than OPC. This type (PPC) is also available in three grades.

3. Sulphate -resisting Portland cement (SRPC or SRC). This kind of cement is produced in small quantities in India. It is special OPC with less than 5% C3A and are superior in resistance against sulphates. Cements called Birla Coastal comes in this category. They should not be confused with supersulphated cements (SSC) made from blast furnace slag, calcium sulphate and small quantities of OPC. (SSC is not recommended for use in places with temperatures above 40°C as in India.) IS 456-2000 recommends that where chlorides is encountered along with sulphate in foundation soil or ground water, OPC with C 3A content 5 to 8 per cent is desirable to be used instead of supersulphate-resisting cement. Alternately, Portland slag cement having more than 50% slag or a blend of OPC and slag cement (which has been found to be of good performance) is recommended.

4. Portland blast furnace slag cement or Portland slag cement (BFSC or PSC). This type of cement constitutes about 10% of cement produced in India. The slag forms 25 to 60`1

of the cement. Every ton of cast iron produces about 0.3 tons of blast furnace slag which can be used in the cement industry. During its setting, the Ca(OH)2 liberated by OPC hydration acts as an activator for the slag. They are also less costly than OPC. Even though it is equated with OPC, it behaves more like PPC and has lower heat of hydration and better sulphate resistance At present, the BFSC cement produced in India is only Grade -33 and there arc proposals to make Grade -43 cements with 45 -70% slag content. Blast furnace slag cement with more than 50% slag has good sulphate resistance too.

5. Hydrophobic cement. In places of high rainfall and humidity, normal cement tends to set when stored due to moisture present in the atmosphere By grinding the cement clinker with a water-repellent film forming substance like oleic acid, a water-repellent film is formed around cement particles during the manufacturing itself. This prevents setting of cement during storage. During mixing with aggregates, this film is broken and cement behaves as ordinary cement.

6. Blended cement For economy, a mixture of Portland cement, blast furnace slag and fly ash is allowed to be used in some countries. It is known as blended cement. This type of cement is not marketed in India.

3. Explain grades of cements available in India and Tests on Cement. GRADES OF CEMENTS AVAILABLE IN INDIA

In the U.S.A. and U.K., cement is covered by one specification, whereas in Germany, it is available in 3 grades. The German practice has also been accepted in India and it came about as follows: Till around 1973, only Grade -33 cement was available in India.

Between 1973 – 75 the Indian Railways adopted the use of prestressed concrete sleepers in a big way for running the high speed trains. It was soon apparent that the common Grade -33 cement available in the market was inadequate to develop the needed minimum characteristic concrete strength of about 50 N/mm - required for the purpose. Hence, the railways developed their own specification for "sleeper cements" with minimum cement strength of 52.5 N/mm2 in 28 days. Some of the factories in India came forward to make these type of cements for the railways, which made them available only to the sleeper manufacturers. Very soon, with the advancement of cement technology, more and more factories found it easy to manufacture higher grade cements with their modernized cement plants. Thus, we have the following types of cement in India:

1. Grade -33 as per IS 269 (1989)—C 33
2. Grade -43 as per IS 8112 (1989)—C 43
3. Grade -53 as per IS 12269 (1987)—C 53
4. Sleeper cements as per IRS -T40-85 (this will be between C 43 and C 53) supplied only to the railways.

The easily available cement today is of Grade -43. It should be noted that the testing procedures used in India are different from those in U.S.A., where cylinders are used so that the 53 -Grade cement produced in India would give approximately 25 to 30% less strength as per ASTM standards. The compressive strength developed by the cements with time.

4. Description of physical tests on Cement.

DESCRIPTION OF PHYSICAL TESTS (IS 4031: PARTS 1 TO 11)

The physical tests are specified in Parts Ito 11 of IS 4031. We shall briefly deal with some of the main laboratory physical tests in the following sections. The concerned Indian Standards should be consulted for details of these tests. In engineering college laboratories, only physical tests are carried out. Chemical tests are carried out in cement factory laboratories and they are shown in the test certificates for each batch manufactured and supplied by the manufacturer to their field agents.

Test for Fineness

The first requirement is that 90% of cement should pass IS 90 microns. Indian Standards also specifies fineness test by Blaine's Air -permeability method as described in IS 4031-1968. The principle is based on the relation between the rate of flow of air through a cement bed and the surface area of the particles comprising the cement bed of a given porosity. The finer the cement the more the surface area and less the porosity in the permeability tests. The Blane's apparatus is shown in Fig. As shown in Table .3 it should be at least 225 m^2/kg.

Test for Normal or Standard Consistency

Many tests for cements like soundness, setting time are to be carried out with cement to which water required to produce what is called the "normal consistency". Normal consistency is determined by the apparatus called Vicars needle. It is the consistency at which the Vicat plunger G of 10 mm diameter and 50 mm length will penetrate 33-35 mm within 3 to 5 minutes of mixing. The test procedure is to carry out at least three trial experiments by mixing the cement with distilled water varying from about 24 to 27 per cent of the weight of cement.

Test for Soundness

The soundness test is an indication of excess of lime caused by inadequate burning of cement or excess of magnesia or sulphates. Excess of these substances is harmful and thus. not allowed in cements. The following two types of tests are used for testing for soundness

(a) Le Chatelier's test (using Le Chatelier's apparatus)

(b) Autoclave test

Le Catelier's test: Le Chatelier's test shows unsoundness due to lime only. Unaerated cement paste at normal consistency is first tested for expansion. If the test results does not satisfy to a depth of 75 mm at a relative humidity of 50 to 80% for 7 days. The expansion in this aerated cement test should not be more than 5 mm.

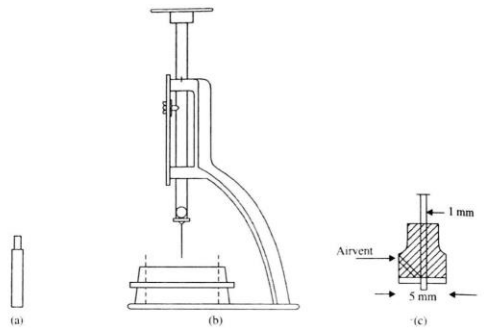

The apparatus used is shown in Fig. 5.3. Cement pastes with normal consistency is filled into the mould. After covering both sides with glass, it is first placed in water of temperature 24 to 35°C for 24 hours. It is taken out and the distance between pointers is measured. The mould is then placed in water and the water is heated to the boiling point

in 30 minutes. The boiling of water is continued for one hour. The mould is then removed and after cooling, the distance between the points is again measured.

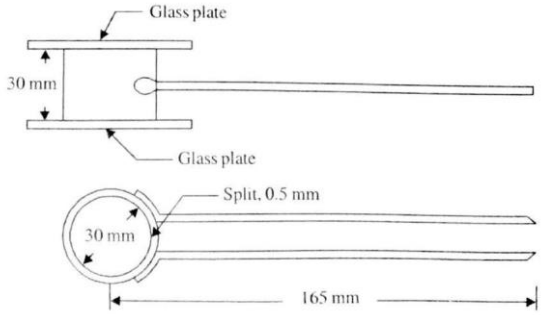

Autoclave test.

Autoclave test is another test used sensitive for soundness ot cement. It is to both lime and magnesia. All the cement having magnesia content more than 3 per cent is to be tested for soundness by this test with unaerated cement. The test consists of heating bars made of cement paste with water of normal consistency and measuring its expansion.

Effect of unsoundness of cement does not appear in the field for a considerable period of time. Hence, these accelerated tests are needed to determine them. In autoclave test, we use higher pressure and temperature to accelerate the reactions. The autoclave expansion of unaerated cement should not be more than 0.8 per cent and that of aerated cement not more than 0.6 percent.

Test for Setting Time

The setting time is also determined by the Vicat's needle on cement paste of normal consistency. For this test, we use a 1 mm square needle (needle C). For this needle, the time to penetrate 33-35 mm is taken as initial setting time.

For final setting time, we use special needle F (which has a diameter of 5 mm) and the time at which this needle will not penetrate more than 0.5 mm is taken as the final set.

False set happens when the ratio of the penetration of the Vicat's C needle after 300 seconds to the penetration in 20 seconds is less than 1/2. In such cases the test has to be repeated. The temperature of water and test room should be 27 ± 2°C.

Compressive Strength

Compressive strength of cement is a very important test. Compressive strength of cement is determined from cubes of face 50 cm 2 in area (7.06 cm cubes) made of cement mortar with one part of cement and three parts of standard sand (conforming to IS 650-1966) by weight and water corresponding to 25% normal consistency plus three per cent of the combined weight of the cement and sand (P/4 + 3.0 per cent weight of cement and sand). The average cube strength of three samples is taken as the test value. Strengths in 3, 7 and 28 days are to be reported. Usually 555 gm of sand and 185 gm of cement are used for the test. The procedure can be described as follows:

1. 555 gm of standard sand and 185 gm of the given cement enough to make three standard cubes are mixed with water equal to 0.25 normal consistency plus three per cent of the combined weight of the cement and sand to a uniform mix (1:3 mortar with a water cement ratio of 0.4 is also specified for this test).

2. The mortar is placed in the standard 7.05 cm size cubes and compacted in a vibrating machine for 2 minutes (The former method of ramming has now been standardized by the vibrating machine).

3. The moulds, with the mortar, is placed under a damp gunny bag or cabin for 24 hours for the cement mortar to set.

4. The cubes are removed after 24 hours and submerged in clean water for curing for 3, 7 or 28 days.

5. The cubes are tested in sets of three after 3 days and 7 days and 28 days after drying the specimen with a cloth. The strengths should conform to the specified strength.

Heat of Hydration (IS 4031-1968)

Hydration of cement is a chemical reaction and it produces heat. In very massive construction this effect can raise the temperature of concrete as much as 50°C. In such cases, we should u se low heat cements or adopt cooling methods. This test is, hence, required only as a check for low heat cements. It is made by the principle of determining heat gain as in physics experiments; the test is carried out by a Calorimeter. Low heat cements should satisfy the following criteria.

a) In 7 days, heat generated should not be more than 65 calories per gram of cement.

b) In 28 days, heat generated should not be more than 75 calories per gram of cement

Chemical Composition Tests (Test for LSF)

The Lime Saturation Factor or LSF is the most important factor. It is determined by applying the following formula to the various constituents of the given cement.

Tests for Tensile Strength

This test was once used as a routine test for cement but has been discontinued as test for cement, but is used for testing mortars (see Chapter 10). For this test, briquettes as shown in Fig. 5.4 are made from 1:3 cement mortar using standard sand and water of 8 per cent the weight of cement and sand. They are cured and the 3 -day and 7 -day tensile strengths are reported. It is generally specified that the 3 - day tensile strength should not be less than 2 N/mm- and the 7 -day strength not less than 2.5 N/mm^2. The briquettes are tested in a special briquette –testing machine. (The shape of briquettes for cement mortar test is shown in Fig. It has an area of 25.4 x 25 mm or 1 x 1 inch, compared to 38 x 38 mm for test on lime mortar).

5. Explain sampling and testing of aggregates.

SAMPLING AND TESTING OF AGGEGATES

The routine and other tests usually prescribed on coarse aggregates are as follows:

1. Routine tests
   - a) Particle Size,(grading) shape and flakiness (3tests)
   - b) Organic impurities
   - c) Moisture content
   - d) percent fines value
   - e) Water absorption and specific gravity
2. Other special tests
   - a) Aggregate crushing value
   - b) Aggregate impact value
   - c) Aggregate abrasion value
   - d) Bulk density and void ratio

DESCRIPTION OF ROUTINE TESTS

Of the above tests, only the first five tests are specified as mandatory and important in many specifications like CPWD specification 77. These are briefly described below:

Particle Size, Shape and Flakiness (IS 2386-1963: Part I)

1. Test for particle size. This is carried out in the field by sieve analysis. The results are plotted as a grading curve as already shown for sand in Fig. 7.1.

2. Tests for shape. Aggregates are classified according to their shape as follows:

(a) Rounded

(b) Irregular or partly -rounded

(c) Angular

(d) Flaky

The shape of aggregates becomes important in case of high strength (high performance) concrete where very low water -cement ratios are to be used. In such cases, cubical –shaped aggregates are preferred for better workability. Improved makes of crushers such as Hydrocone crushers, Barma rock or Rock VSI crushers, give better products than ordinary jaw crushers. The laboratory test for shape is known as test for flakiness or elongation index.

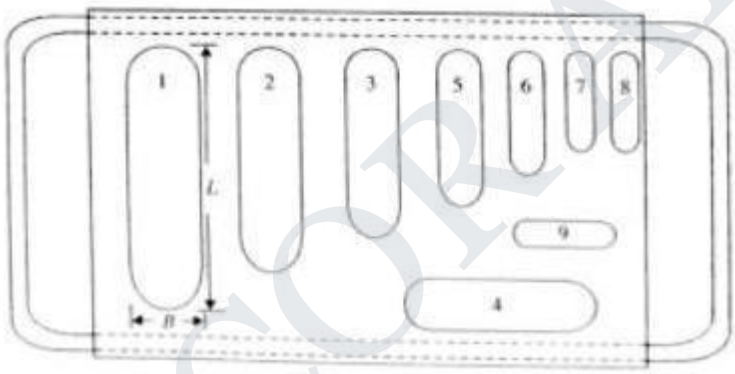

3. Test for elongation index (flakiness). The flakiness or elongation index of an aggregate is defined as the percentage weight of particles in the given aggregate which has its length greater than 1.8 times and its least dimension (thickness) is less than 3/5 (or 0.6) times its mean dimension. A length gauge with holes of various sizes as specified is available as a standard piece of laboratory equipment as shown in Fig. 8.1. This test is not used for aggregate sizes smaller than 6.3 mm.

For the test, sufficient quantity of sample should be taken so that the minimum number of 200 pieces of any standard size fraction is to be tested. The following is the procedure of the test.

1) Take sufficient quantity of the aggregate and sieve it through the different standard sizes of sieve shown in Table 8.3 into fractions. Each fraction should be tested for flakiness.

2) Each fraction is gauged in turns through the hole of dimension of thickness 0.6 times and of length 1.8 times the mean size of the aggregate as shown in Table 8.3.

3) The total amount passing through the various gauges is weighed to an accuracy of 0.1% of the weight of the sample.

4) Flakiness index is the total weight of the material passing through the gauges of various thickness expressed as a percentage of the total weight of the sample taken.

British specifications limit this index to 50 for natural aggregate and 40 for crushed coarse aggregate. For wearing surfaces like roadwork, we may adopt a lower value.

TEST FOR ORGANIC IMPURITIES, CLAY CONTENT AND PERCENTAGE FINES

The same test as described for fine aggregate (sand) can be used for coarse aggregate also. The clay content and percentage fines can be found by immersing the aggregate in water and examining the suspended particles in the water.

TEST FOR MOISTURE CONTENT

The easy test is the drying method in an oven or heating in an open pan in the field. It can also be carried out by pouring an inflammable liquid like methylated spirit and igniting it to evaporate the water.

TEST FOR LOAD FOR 10% FINENESS VALUE OR CRUSHING VALUE

(Sample preparations for this test and also for the test called aggregate crushing test described later are similar). About 6.5 kg material consisting of material passing 12.5 mm and retained on 10 mm sieve is taken and compacted in the standard cylinder used for this test in three layers—each layer being compacted 25 times with a tamping rod. The top layer is leveled off. The weight of the sample is recorded. The same weight should be taken for subsequent tests also. The apparatus used is shown in Fig.

On the cylinder with the base plate, the plunger is placed and the unit is set up in a compression testing machine. The load is applied gradually at a uniform rate so that the plunger penetration is as given below in 10 minutes: About 15 mm for rounded or partially - rounded aggregate like natural gravel samples: 20 mm for normal crushed stones and 24.0 mm for honeycombed aggregates like shale and slag. After reaching the necessary penetration the load is released and the material is sieved through 2.36 mm I.S. sieve. The percentage of the fines passing the above sieve is expressed as a percentage of the weight of the test sample. This should be on the range of 7.5 to 12.6% (i.e. about 10%). Repeat the test till we find the load for the above result.

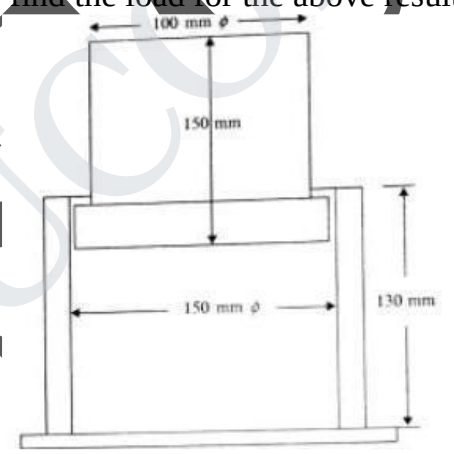

AGGREGATE CRUSHING VALUE

In this test, we find the percentage of fines at a specified load of 40 tonnes. The preparation for this test is the same as that for 10 per cent fines. In this test, after the specimen is set in the compression machine, the plunger is loaded to 40 tonnes in 10 minutes. The load is released and the material is sieved through 2.36 mm sieve (same sieve as used in 10% fine test) to obtain the aggregate crushing value or the percentage fines. It is usually recommended as 45 per cent for aggregates used for concrete other than that used for wearing surfaces. For concrete for wearing purposes, it should not exceed 30 per cent. Generally, it ranges from 18 to 27% for Indian aggregates.

Test for Water Absorption and Specific Gravity (IS 2386-1963: Part III)

A sample of aggregates not less than 2 kg is washed and immersed in water for 24 hours and its immersed weight in water is found (A). It is taken out of the water and the saturated surface dry sample is weighed in air (B). It is then over -dried and weighed

AGGREGATE IMPACT TEST

This test is for aggregates in concrete that undergoes impact as in runways in airports. Materials passing through 12.5 mm and retained as 10 mm are tilled in the standard cylinder in three layers, each layer tamped with 25 strokes of an iron rod. A hammer weighing 14 kg is dropped from a height of 380 mm 15 times and the resulting material is sieved through a 2.36 mm I.S. sieve. The percentage tine is the aggregate impact test value. It should not be more than 45% for aggregates for concrete for ordinary use and not more than 30% for aggregates for concrete for runways and pavements. For Indian aggregates, it ranges from 15 to 30%.

AGGREGATE ABRASION VALUE (ATTRITION TEST)

This test is for the stones used in road construction. We use the Deval's abrasion testing machine or preferably the Los Angeles abrasion machine for this purpose. hi the latter test, a sample of specified grading which varies with the maximum size of aggregate to be tested is placed in the machine with steel or cast iron spheres of 48 mm diameter and 390 to 445 gm weight. The machine is rotated for specified revolutions depending on the grading (500 to 1000 revolutions). The resulting material is sieved through 1.7 mm sieve the percentage of wear is called the Los Angeles aggregate abrasion value. It should not be more than 16 per cent for a good aggregate.

BULK DENSITY AND VOID RATIO

Bulk density is determined by packing the aggregate into a specified container of known volume and determining the weight of the aggregates packed.

Aggregate Crushing Strength

This test is performed on a core or cube obtained from the original rock. It gives a measure of the strength of the parent rock (see Section 1.5.1).

MEASURE OF STRENGTH OF AGGREGATES

As discussed earlier, the three tests that deal with the strength of aggregates are

(a) Ten percent fineness value
(b) Aggregate crushing value
(c) Aggregate crushing strength

Of these, the ten per cent fineness value is considered a good test for weak aggregates while the crushing value is considered good for general aggregates. As already stated, crushing strength gives only the strength of the parent rock.

ALKALI AGGREGATE REACTION

It was as late as in 1940 that it was discovered by the American Bureau of Reclamation that some of the natural aggregates that contain reactive silica (like traps, andesites, rhyolite, some types of limestones, sandstones and natural gravels) react with the alkali of the cement and produce compounds that cause expansion and deterioration of concrete. Such concrete can become unserviceable even in one year's time. Aggregates from such sources should be tested for reactive silica by special tests for its suitability for making concrete.

UNIT – 3

CONCRETE

PART – A (2 MARKS)

1. Define Concrete?

Concrete is defined as the solid-composite material and made up of suitable proportions of binding material, fine aggregate, coarse aggregate and water some special chemicals (called Admixtures) may be used to change properties of concrete.

2. State the various ingredients of concrete?

- Binding materials (Cement, Lime etc)
- Fine aggregate (Sand, Rock quarry dust etc)
- Coarse aggregate (Broken stone, gravel, brick bats etc)
- Water

3. What are five aggregates and Coarse Aggregate?

Fine aggregates are the material in concrete (or in mortar) of size of above 4.75mm and lesser, used to fill the voids present in the coarse aggregate.

Example: Sand, Rock quarry dust etc.

Coarse aggregates are the material of size 40mm and lesser, provides the bulk for the concrete mass.

4. What are the functions of water in concrete?

1. It reacts with cement and forms a cement paste, to form a binding medium for aggregate.
2. Water wets the surface of the aggregates.
3. It spreads the cement paste over the aggregates.
4. It increases the workability of concrete.

5. What is batching of ingredients of concrete?

Batching is the process of measuring the accurate quality of materials used to prepare the concrete, to get the homogenous concrete mass.

It is carried out in the following two methods

1. Weight batching
2. Volume Batching

6. What is Transportation of concrete? State the methods?

Transportation of concrete is the process of carrying (or transporting) the concrete from the mixing place to the place of deposition.

- Mortar pan Method

- Wheel barrow and hand carts
- Truck mixture and dumper
- Crane, Bucker and ropeway

7. Define Compaction of concrete and state various methods of compaction?
Compaction is the process of moulding the concrete with the in the form and around embedded parts in order to expel the entrapped air form the concrete and to obtain homogeneous dense mass.

- Hand compaction
- Compaction by vibration
- Compaction by pressure and jolting
- Compaction by spinning

8. What are the factors deciding the choice of particular type of method of compaction of concrete?

- Water-cement ratio
- Types of concrete structure
- Desired properties of hardened concrete etc.

9. What are the methods of compaction?

1. Hand compaction
2. Compaction by vibration
3. Compaction by pressure and jolting
4. Compaction by spinning

10. What is the ready Mix concrete (RMC)?

Concrete prepared at plant or in trick inixers and transported to the construction site is called Ready Mic concrete (RMC) or Pre-Mix concrete.

11. What are the advantages of ready mix concrete?

1. Low cost
2. High durability
3. Can be manufactured for desired strength.
4. No quality control required as in the case of concrete prepared at site.

12. Define Workability. What are factors affecting workability?

Workability is defined as the property of fresh concrete, where determine the case and homogeneity with which the concrete can be mixed, placed compacted and finished.

1. Water-Cement ratio
2. Mix Proportions
3. Size of the aggregates
4. Shape of the aggregates
5. Nature of the work
6. Climatic condition (temperature, humidity etc)

13. What is Consistency of Concrete?

Consistency is also an important property of fresh concrete, and it indicates the degree of fluidity or degree of mobility.

14.What is water-Cement Ratio?

Water-Cement ratio in a given volume of concrete is an important parameter to define the work ability. The higher the W/C ratio, the higher will be the fluidity of concrete, and hence the workability will be decreased.

15. What arethe methods adopted to measure the workability of fresh concrete?

1. Slump Test
2. Flow test
3. Compression Factor test
4. Kelly ball test
5. Vee-Bee consistometer test

16. State the principle of compaction factor test?

Compaction factor (or compacting factor) testis working on the principle of determining the degree of compaction achieved by a standard amount of determining the degree of the compaction achieve by a standard amount of work done by allowing the concrete to fall through a standard height.

17. Define Segregation?

The Disintegration of ingredients of concrete mix, so that the mix is no longer in a homogeneous and stable condition, is called as **Segregation**.

18. What are the causes of Segregation?

- Improper mixing of concrete
- Improper mix design
- Dropping of concrete from heights
- Discharging concrete against the obstacles
- Passing the concrete along the chute
- Concrete discharges from a badly designed mixer
- During the conveyance of concrete
- Excessive vibration to high-wet mix
- Improper finishing of concrete surface

19. What are the causes of bleeding?

- Improper mixing
- Improper mix design
- Highly wet mix
- Heavy compaction (or) vibration.

20. Define Bleeding?

It is defined as the type of segregation, in which sum of the water leaves out from the concrete and float on the surface of the concrete. It is sometimes referred as Water gain. It is happening due to the lowest specific weight of water when compare with other ingredients of concrete.

PART – B (16MARKS)

1. Write the short note on Production of Concrete/Concrete Operations

PRODUCTION OF CONCRETE/CONCRETE OPERATIONS

The concrete operations i.e. the various operations required in production of concrete for a concrete construction project are listed down as follows;

(i) Storing
- (a) Storing of cement
- (b) Storing of aggregates
- (c) Storing of water

(ii) Batching
- (a) Batching of cement
- (b) Hatching of aggregates
- (c) Batching of water

(iii) Mixing
- (a) Hand mixing
- (b) Machine -mixing

(iv) Handling and Transporting
(v) Placing
(vi) Compacting
(vii) Finishing
(viii) Curing.

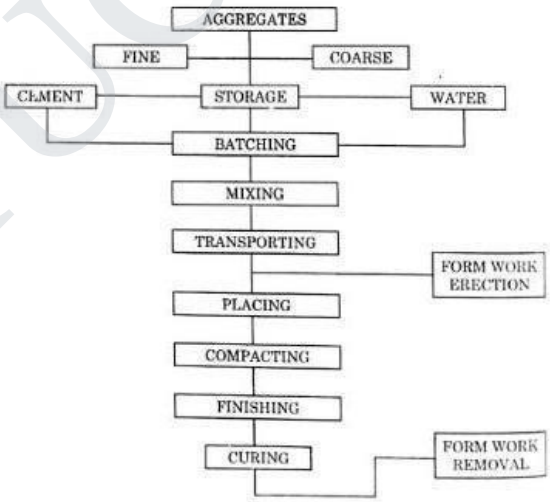

Fig. 5.1

2. What are the stages of Concrete Period? And Explain Properties of Fresh Concrete.

STAGES OF CONCRETE PERIOD

There are two distinct stages of the concrete period. Each stage has its qwn requirements for its ideal properties. These stages are:

(A) Fresh concrete
(B) Hardened concrete

PROPERTIES OF FRESH CONCRETE

The fresh concrete or plastic concrete is the initial stage of concrete period and it is counted from the mixing stage till it is transported, placed, compacted and finished in the position. The fresh concrete must satisfy the following requirements.

Ideal Requirements of Fresh Concrete

i. Mixability

The mix should be able to produce a homogeneous and uniform fresh concrete from the constituent materials of each batch under the action of mixing forces.

ii. Stability

The mix should be stable meaning thereby it should not segregate during transporting and placing and also the tendency of the bleeding should be minimum.

iii. Mobility/Flowability

The mix should be mobile enough to surround all reinforcement without leaving any voids behind as well as to completely fill the formwork.

iv. Compactability

The mix should be amenable to proper and thorough minpaction into a dense compact concrete under the existing facilities of compaction at site.

v. Finishability

It should be able to obtain a uniform and satisfying surface finish.

Workability

All the diverse and various requirements of fresh concrete viz mixability, stability mobility, compactability and finishability are unified in a single term WORKABILITY. It is difficult to define workability precisely in a single definition.

IS: 6461 (part VII) -1973 defines 'workability that property of freshly mixed concrete or mortar which determines the case and homogeneity with which it can be mixed, placed, compacted and finished.

Here, it should bear in mind that the optimum workability of concrete varies from situation to situation. Concrete which is workable for pouring into large sections with minimum reinforcement may not be equally workable for pouring the same in thin sections with heavy conjestion of reinforcement. A concrete may not be workable when compacting by hand but may be satisfactory when mechanical vibrator is used.

Measurement of Workability

There are a number of different empirical tests available for measuring the workability of fresh concrete but there is no acceptable test which can measure directly the workability as defined by IS: 6461 (part VID-1973. Each test measures only a particular aspect of it and there is really no unique method which can measure the workability in its totality. The widely used empirical tests are as follows,

i. Slump test
ii. Compacting Factor test
iii. Flow test
iv. Vee-Bee test
v. Kelly Ball test

Slump Test

- The slump test is used extensively in the site work all over the world because of the simplicity of the apparatus required and test procedure.

- The slump tea indicates the behaviour of a compacted concrete cone under the action of gravitational forces
- The slump test is very useful on the site as a check on batch -to -batch or hour -to – hour variation in the materials being fed into the mixer.
- Too high or too low slump gives immediate warning and enables the mixer operator to remedy the situations.
- The slump test is suitable only for concrete of medium to high workabilities (slump 25 mm to 125 mm)

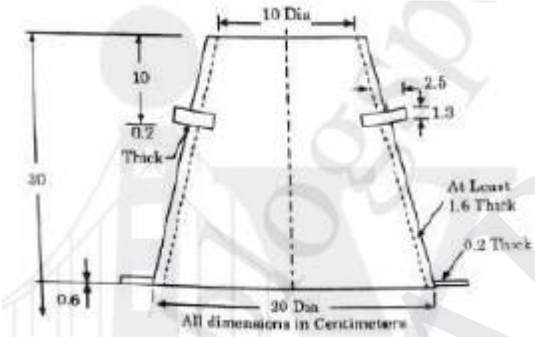

Specifications of slump -test -mould as per IS: 1169-1959.

Bottom diameter =20 cm
Top diameter = 10 cm
Height = 30 cm.
Thickness of metallic sheet of mould = 1.6 cm.
Two handles from top = 10 cm.
Tamping rod = 16 mm in dia, 60 cm long rounded at one end.

The slump cone is placed on horizontal and non-absorbent surface and filled in three equal layers of fresh concrete, each layer being tamped 25 times with a standard tamping rod. The top layer is struck off level and the mould is lifted vertically without disturbing the concrete cone and the unsupported concrete will now slump -hence the name of t he test. Three types of slump may pattern

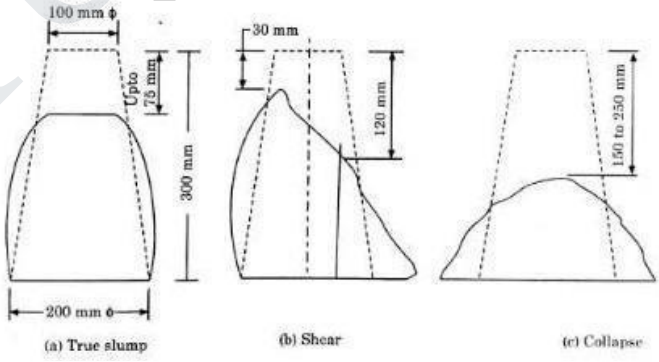

(i) True slump— Slumping evenly all round measuring up to 150 mm from top
(ii) Shear slump— One half of the cone sliding down
(iii) Collapse slump— When slump measuring more than 150 mm from top.

True slump is desirable but shear slump indicates the concrete is non -cohesive and showing the sign of segregation. Collapse slump indicates the excess of water

content. Shear slump and collapse slump are undesirable and remedial measures must be applied to the concrete mix.

Limitations of slump test

- Not suitable for concrete made with aggregate size more than 40 mm
- Not suitable for harsh mixes.

The only advantage of the slump test is that the water content of successive batches of concrete of the same identical mix can be easily detected.

Compacting Factor Test

The compacting factor test indicates the behaviour of fresh concrete under the action of external forces. It measures the COMPACTABILITY of concrete which is an important aspect of workability, by measuring the amount of compaction achieved for a given amount of work.

This test is more sensitive and precise when compared to slump test and is generally recommended for concrete mixes of low to medium workability, that is, when concrete is to be compacted by vibration.

For concrete of very low workability of the order of 0.70 or below, this test is not suitable. Because compaction of such concrete is obtained under heavy pressure such as pavement concrete.

The compacting factor apparatus consists essentially of two hoppers, each in the shape of frustum of a cone, and one cylinder, the three being above one another The hoppers have hinged doors at the bottom, as shown in Fig. 5.13. All surfaces are polished to reduce friction

The dimensions of the apparatus as factor apparatus. per IS: 1119-1950 are tabulated

The upper hopper is filled with concrete so gently that no work is done on concrete to produce compaction. The bottom door of the upper hopper is opened and the concrete falls into the lower hopper. Then the trap door of the lower hopper is opened and the concrete falls into the cylinder. The weight of the concrete in the cylinder is found out and this weight is known as "weight of partially compacted concrete", The ratio of the weights of concrete filling the cylinder by this fall (i.e. weight of partially compressed concrete) to the weight of concrete that can be filled in the cylinder by vibration is known as compacting factor

It can be realised that the compacting factor test measures the inherent characteristics of the concrete which relates very close to the workability requirements of concrete in the field.

The test has been more popular in laboratory conditions and more accurate than slump test especially concrete for low and medium workability.

Vee-Bee Consistency Test

The name Vee-Bee (Vebe) is derived from the initials of V. Bahrner of Sweden who invented this test.

This test is recommended for stiff concrete mixes having low and very low workability.

The veebee test also has the additional advantage that the treatment of concrete during the test is comparatively closely related to the method of placing in practice.

Veebee is a good laboratory test and this is in contrast to the compacting factor test where error may be introduced by tendency of some dry mixes getting stuck in the hopper

This test consists in moulding a fresh concrete cone in a cylindrical container mounted on a vibrating table as shown in Fig. 5.14. The concrete cone when subjected to vibration start; to occupy the cylindrical container by way of getting remoulded. By visual inspection. When the concrete surface becomes horizontal, the remoulded is considered complete and it expressed in vee-bee seconds.

This test is not suitable for high workable (slump excess of 125 mm) concrete because tin remoulding is so quick, it is difficult to measure vee bee time.

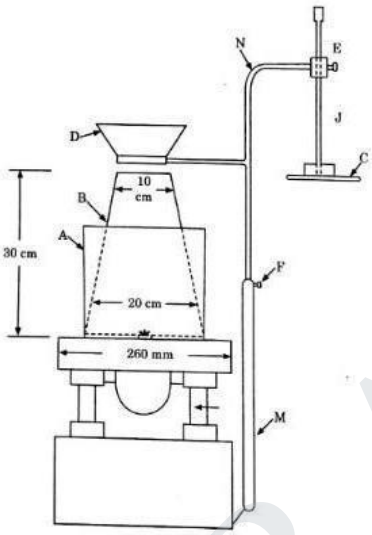

Factors Affecting Workability

The factors helping concrete to have lubricating effect (workability) to reduce internal friction, for helping easy compaction are listed below;

(a) Water content
(b) Mix proportion
(c) Size of aggregate
(d) Shape of aggregate
(e) Surface texture of aggregate
(f) Grading of aggregate
(g) Use of admixtures.

(a) Water Content

The basic factor affecting the workability is water content which is expressed in litres of water per cubic meter of concrete. The higher the water content, higher will be the fluidity of concrete but subject to limitation of water -cement ratio. More water can be added, provided a correspondingly higher quantity of cement is also added to keep the w/c ratio same so that the strength of concrete remains unchanged.

(b) Mix Proportion

Aggregate/cement ratio is the inversely proportion to the workability. With lower aggregate/cement ratio (rich concrete), more paste is available to make the mix cohesive and fatty to give better workability. On the other hand, the higher aggregate/cement ratio (leaner concrete), less quantity of paste is available to provide lubrication and thereby lowers workability.

(c) Size of Aggregate

For the given quantity of water and paste, bigger size of aggregate will give higher workability because of reduction of total specific surface area and inter -particle frictional resistance.

(d) Shape of Aggregate

The shape of aggregates influences the workability greatly. Angular/elongated/flaky aggregate makes the concrete very harsh whereas rounded aggregate enhances the workability in good measure because of reduction in total specific surface area and inter - particle frictional resistance for a given volume or weight. This explains the reason why river sand and gravel provide greater workability to concrete than crushed sand (crushed aggregate).

(e) Surface Texture of Aggregate

Rough textured aggregate will exhibit poor workability whereas smooth or glossy textured aggregate will impart better workability because of reduction of inter -particle frictional resistance offered by smooth surface thereby contributing higher workability.

(f) Grading of Aggregate

A well graded aggregate has lesser amount of voids in a given volume. Other factors being constant, if the total voids are less, excess paste is available to give better lubricating effect. The mixture becomes cohesive and fatty preventing segregation of particles. Therefore, better is grading, less is the void content and higher is the workability.

(g) Properties of Cement

The workability is also affected by the physical and chemical properties of cement, but to a much lesser extent. Rapid -hardening cement will have reduced workability as compared to ordinary portland cement because of higher specific surfaces.

(h) Use of Admixtures

The presence and nature of admixtures affect the workability considerably. The use of the plasticizers and super plasticizers improve the workability manifolds. Use of air - entraining agents which are normally surface-active, reduces the internal friction between the particles. The air –entraining agents like resin, soap or chemicals introduce a large number of very minute air bubbles which act as rollers and increase workability.

They decrease bleeding and segregation also.

Sign of a Good Concrete

A good concrete is one in which all the ingredients are properly distributed to make a homogeneous mixture and it should not shown any sign of

(a) Segregation

(b) Bleeding

(a) Segregation

Segregation can be defined as the separation of coarse aggregate from the main mass of concrete in the plastic stage and it occurs in case of dry mix of insufficient and non - uniform mixing.

Basic reasons for segregation can be stated as follows, if

There are considerable difference in the sizes and specific gravities of mix constituents used.

The aggregates used are not well graded.

In the concrete, sufficient matrix is not available to bind the aggregates.

The mix is too dry or too wet.

The mix handling is very improper like dropping concrete from a considerable height, transporting and travelling concrete over a longer length, passing concrete along a chute, particularly with changes of direction and discharging against an obstacle.

The vibrator is used to spread a heap of concrete over a larger area.

The vibration is allowed to continue too long.

The remedial measures to eliminate segregation can be summarised as follows:

Reducing the height of drop of concrete.

Not using vibration as a means of spreading a heap of concrete over a large area.

Sporting, placing, compacting and finishing.

By taking into consideration of various parameters such as grading, size, shape and surface texture of aggregate with optimum quantity of water to make a cohesive mix.

(b) Bleeding

Bleeding, known as WATER GAIN, is a form of segregation in which some of water in the Mix tends to rise the surface of freshly placed concrete. This is because of the inability of the solid contitutents of the mix to hold all the mixing water in the place when they settle downwards. water having the lowest specific gravity of all mix constituents.

Bleeding is predominant in a highly wet mix, badly proportioned and insufficiently mixed concrete

Bleeding causes the formation of a porous, weak and non -durable concrete layer at the top of placed concrete.

In case of lean mixes, bleeding may create capillary channels increasing the permeability of concrete.

The formation of cement paste at the surface is known as LAITAN C E. The laitance formed in pavement concrete does not have good wearing quality, produces dust in summer and mud in rainy season. It also develops higher shrinkage crack.

Remedial measures to minimise bleeding

It can be reduced by proper proportioning and uniform and complete mixing.

Reduction in bleeding is obtained by addition of pozzolanas viz flyash or silica fume.

Air entrainment effectively reduces bleeding so that finishing can follow casting without delay.

The presence of an adequate proportion of very fine aggregate particles (finer than 150 micron) significantly reduces bleeding.

The use of crushed fine aggregate than rounded natural sand can reduce bleeding effectively. Bleeding is decreased by increasing the fineness of cement possibly because finer particles hydrate earlier and also because their rate of sedimentation is lower. The cement containing high alkali content and a high C3A content produces very le&, bleeding.

3. Explain Properties of Hardened Concrete.

PROPERTIES OF HARDENED CONCRETE

The concrete is a basic prime building material because of various properties being possessed during its hardened state which starts from the day it attains the full designed strength to the end of its life. For hardened concrete, the various properties which need consideration are as follows.

(A) STRENGTH

(a) Compressive strength

(b) Tensile strength

(c) Flexural strength

(d) Shear strength
(e) Bond strength
(B) Durability
(C) Impermeability
(D) Dimensional Changes
(a) Elasticity
(b) Shrinkage
(c) Creep
(d) Thermal expansion
(e) Fatigue
(E) Fire Resistance

Strength of Concrete

The strength of concrete is the most important property as far as structural designs are concerned. Indirectly, it gives the idea of other properties (Impermeability, durability, wear resistance etc) also. A strong concrete is more dense, compact, impermeable and resistant to weathering and chemical attacks. Meaning thereby, the strength of concrete gives an overall idea of its quality. Strength of concrete is defined as the ability to resist force and for structural purposes, it is taken as the unit force required to cause rupture which may be caused by compressive stress, tensile stress, flexural stress, shear stress, bond stress etc.

Compressive Strength of Concrete

The compressive strength of concrete is considered the basic character of the concrete. Consequently, it is known as the CHARACTERISTIC COMPRESSIVE STRENGTH OF CONCRETE (fck) which is defined as that value below which not more than five percent of test results are expected to fall based on IS: 456-2000. In this definition the test results are based on 150 mm cube cured in water under temp. of 27 ± 2°C for 28 days and tested in the most saturated condition under direct compression. Other strength viz, direct tensile stress, flexural stress, shear stress and bond stress also are directly proportional to the compressive stress. Higher is the compressive stress, higher is other stresses also. Not only stresses, other properties for example modulus of elasticity, abrasion and impact resistances, durability are also taken to be related to the compressive strength, hence, the compressive strength is an index of overall quality of concrete.

Factors Affecting Compressive Strength

Among the materials and mix variables, WATER -CEMENT RATIO is the most important parameter governing the compressive strength. Besides W/C ratio, following factors also affect the compressive strength.

- The characteristics of cement.
- The characteristics and properties of aggregates.
- The degree of compaction
- The efficiency of curing
- Age at the time of testing.
- Conditions of testing.

Water -Cement Ratio

The water -cement ratio, defined as the ratio of the mass of free water (i.e. excluding that absorbed by the aggregate) to that of cement in a mix, is the most important factor that controls the strength and many other properties of concrete. In

practice, this ratio lies generally in the range of 0.35 to 0.65, although the purely chemical requirement (for the purpose of complete hydration of cement) is only about 0.25.

The compressive strength of concrete at a given age and under normal temperature, depends primarily on w/c ratio; lower the w/c ratio, greater is the compressive strength and vice versa. This was first enunciated by Abrams as S = where S is the compressive strength, w/c is water -cement ratio of a fully compacted concrete mix, K1 and K2 are empirical constants. In day- to-day practice, the constants K 1 and K2 are not evaluated, instead the relationship between cornpressive strength and w/c ratio are adopted which are supposed to be valid for a wide range of conditions.

UNIT – 4

TIMBER AND OTHER MATERIALS

PART – A (2MARKS)

1. What is Timber?

Timber is defined as the wood suitable for building (or carpentry) purposes and it is applied to the trees measuring not less than 0.6m in circumference or girth of the trunks.

2. What are standing timber and Rough timber?

Timber available in tree is called standing timber. Rough timber is the timber obtained after falling of a tree.

3. Define Seasoning of timber?

Seasoning is defined as the process of drying the timber to reduce the moisture content and thus to prevent the timber from possible fermentation and making it suitable for use.

It can also be defined as the process of drying the wood to moisture content approximately equal to the average humidity of the surroundings, where it is to be permanently used.

4. What are the methods of Artificial Seasoning?

1. Electrical seasoning.
2. Water seasoning
3. Boiling
4. Kiln Seasoning

5. State the factor affecting the strength of timber?

1. Abnormalities of Growth
2. Moisture Content
3. Seasoning Efficiency
4. Attacks of Insects etc.

6. Name some of the market forms of timber and industrial timber?

1. Board
2. Batten
3. Deal
4. Plank etc.

7. What are the advantages of thermacole?

Thermacole has an excellent heat, sound and electric properties.
It can be easily prepared.
It has low cost
Replacing of old one by new can be easily done.

8. Define industrial Timber?

Industrial timber is defined as the timber prepared in a factory with specification and having shape, appearance, strength etc.

9. Define Annealing?

Annealing is the process of heating and slow cooling of metal, glass or may other material, which has developed strain due to rapid cooling, the process consists of heating the steel to a temperature blow the critical range, but high enough to obtain re-crystallization and then cooled in any manner.

10. Name some of the standard shapes of rolled steel sections available in the market?

1. Angle section
2. Channel section
3. T- section
4. section etc

11. Why Aluminium has good corrosive resistance property?

Aluminium has high corrosive resistance (This is due to thin surface layer of Aluminium Oxide that forms when the metal is exposed to air, effectively preventing further oxidation.)

12. State the uses of Magnesium?

Magnesium is used in fire-works, Signaling, paints, photography, whitening paper pulp, etc. Magnesium is used with alloy from and used to make engine parts, chair forms etc.

It is used as a cementing material for the manufacture of artificial stone, tiles and plaster etc.

It is widely used as a refractory material in the form of magnesia brick lining the steel and electric furnaces.

13. Explain the classification of paints?

- Oil paints
- Bituminous Paints
- Water Paints
- Cement Paint

- Special Paints (fire proof paints, luminous paints etc)

14. Write the important components of paint?

- The base
- Vehicle or Binder
- Pigments
- Solvents or Thinners
- Driers and Plasticizers
- Adultrants.

15. What is the base and what is the vehicle in paint?

The Base is solid substance and a metallic oxide, forms the volume of paint. It makes the paints film opaque and possesses binding properties.

Vehicle is oil to which the bases is mixed and also known as **Binder.** It holds the constituents of paints in suspension and help spread it over the surface to be painted.

16. Define the Pigment volume Concentration?

It is the concentration by volume of pigments expressed as a percentage of the total volume of non-volatile constituents of the points.

17. Define Varnish?

Varnish is homogeneous solution of resin or resinous material prepared oil, alcohol or turpentine. The types of solvent depend upon the type of resin used.

18. What is Distemper?

Distemper is the mixture of pigment, suspended in a liquid used as protective or decorative coating of surface it dries to from a hard coating. It is made with base as white chalk and thinner as water. Some coloring pigments and glue are added.

19. What is Bitumen?

Bitumen is oil based, high viscous, semi-solid material produced by removing the lighter material (such as liquid petrol diesel) from heavy crude oil during the refining process.

It is a non-crystalline solid or viscous material derived from petroleum, by natural or refinery process and substantially soluble in carbon disulphide. It is asphalt in solid state and material tar in semi fluid state.

20. What are the advantages of bituminous roads over concrete roads?

- Flexible Roads
- Easy to repair and maintenance
- Less Coast
- Suitable for all types of roads (NH, SH, MDR, ODR and Rural Roads).

PART – B (16MARKS)

1. Explain in detail the application of timber in construction.

In comparison with other construction materials, using timber is energy saving. The manifold material values can also be expanded with the material selection. The selection between different materials like round wood, squared wood, sawn wood or glued laminated timber which has been improved through industrial methods, or different sorts of plywood, provides different resistance qualities with economical and competitive construction possibilities. Wood sections are a further quality to take into account beside resistance criteria when using round- or sawn wood. The treatment preceding the drying and the considering of the extension of the year rings in different forms of sections, as well as the profiles of the wood sections are most important for an economical formation of detail in the constructive use of timber.

Techniques and Means of Assembling New highly efficient means of assembling, i.e. connections with lower section weakening and needs of steal, have to be developed for a highest possible degree of pre-fabrication in the workshop and in order to reduce the working time on the site as much as possible.

The use of new connecting systems like nailed tinplates, screws, lag bolts as well as connectors with wood contact allow a much higher quality of more filigree supporting systems when linked with deterministic non-destructive testing methods in order to avoid sporadic problems, which arise in highly stressed construction elements. Connectors combining fiberglass and mechanical fasteners allow also a noticeable increase in the load capacity, as shown in a recent study on fiberglass reinforced timber joints.

In order to give timber a new chance as a construction material, the different research development and marketing programs should not aim at the quantity of material used, but at the manifold quality of material steadiness, section variability, material diversity as well as facilitated construction control and quick usage of the new techniques in timber engineering construction.

Timber as load-bearing material has only a chance if the conception of the construction can show a quality which is not only functional, technical or architectural, but which can also justify its economy. This presupposes, how-ever, a more important planning and a better cooperation between architect and engineer, in order to make the most of the diversity of forms, structures and techniques applicable to timber.

It is essential to define clearly the quality criteria of a timber construction and to aim at reading easily the force and load fluctuations, and reducing the material through load- and detail planning with an optimally functional adaptation to technique and construction.

New Techniques in Timber Construction

The increasing use of timber in the construction depends on engineering developments of timber as a load-bearing material, in order to raise the modest portion of the total construction volume from about 1 per cent to perhaps 2 or 3 per cent.

The criteria of development are: better evaluation of the timber quality, increase of the diversity and better treatment of material varieties, development of new time-sparing assembling techniques which allow the highest possible degree of pre-fabrication.

Quantity related techniques for floors, walls and roofs of the dense housing and public buildings linked with other massive construction materials, as well as quality related high-tech systems, which play a significant role in the modern architecture of roof, hall and bridge construction, should correct the image of timber and offer a competitive alternative to other materials used in construction.

The material selection is no proof for "good architecture". It is, however, an important contribution to the environmental conservation, even if it needs more concentration on the planning phase.

2. Write short notes on Plywood, Veneer and Thermacole.

Plywood

Plywood is a laminate made of thin layers of wood.

Veneer

In woodworking, veneer refers to thin slices of wood, usually thinner than 3 mm (1/8 inch), that typically are glued onto core panels (typically, wood, particle board or medium-density fiberboard) to produce flat panels such as doors, tops and panels for cabinets, parquet floors and parts of furniture. Plywood consists of three or more layers of veneer, each glued with its grain at right angles to adjacent layers for strength. Veneer beading is a thin layer of decorative edging placed around objects, such as jewelry boxes.

Veneer is also used to replace decorative papers in Wood Veneer HPL. Veneer is also a type of manufactured board.

Veneer is obtained either by "peeling" the trunk of a tree or by slicing large rectangular blocks of wood known as flitches. The appearance of the grain and figure in wood comes from slicing through the growth rings of a tree and depends upon the angle at which the wood is sliced. There are three main types of veneer-making equipment used commercially:

A rotary lathe in which the wood is turned against a very sharp blade and peeled off in one continuous or semi-continuous roll. Rotary-cut veneer is mainly used for plywood, as the appearance is not desirable because the veneer is cut concentric to the growth rings.

A slicing machine in which the flitch or piece of log is raised and lowered against the blade and slices of the log are made. This yields veneer that looks like sawn pieces of wood, cut across the growth rings; such veneer is referred to as "crown cut". □

A half-round lathe in which the log or piece of log can be turned and moved in such a way as to expose the most interesting parts of the grain.

Each slicing processes gives a very distinctive type of grain, depending upon the tree species. In any of the veneer-slicing methods, when the veneer is sliced, a distortion of the grain occurs. As it hits the wood, the knife blade creates a "loose" side where the cells have been opened up by the blade, and a "tight" side.

Types:

Raw veneer has no backing on it and can be used with either side facing up. It is important to note that the two sides will appear different when a finish has been applied, due to the cell structure of the wood. □

Paper backed veneer is, as the name suggests, veneers that are backed with paper. The advantage to this is it is available in large sizes, or sheets, as smaller pieces are joined together prior to adding the backing. This is helpful for users that do not wish to join smaller pieces of raw veneers together. This is also helpful when veneering curves and columns as the veneer is less likely to crack.

Phenolic backed veneer is less common and is used for composite, or manmade wood veneers. Due to concern for the natural resource, this is becoming more popular. It

too has the advantage of being available in sheets, and is also less likely to crack when being used on curves

Laid up veneer is raw veneer that has been joined together to make larger pieces. The process is time-consuming and requires great care, but is not difficult and requires no expensive tools or machinery. Veneers can be ordered through some companies already laid up to any size, shape or design.

Reconstituted veneer is made from fast-growing tropical species. Raw veneer is cut from a log, and dyed if necessary. Once dyed, the sheets are laminated together to form a block. The block is then sliced so that the edges of the laminated veneer become the grain of the reconstituted veneer.

Wood on Wood Also called 2-ply is a decorative wood veneer face with a utility grade wood backer applied at an opposing direction to the face veneer

Advantages:

Furniture made with wood veneer uses less wood than the same piece of furniture made with solid wood. Some projects built using wood veneer would not be possible to construct using solid lumber, owing to expansion and contraction caused by fluctuation of temperature and humidity.

Thermacole:

Its high thermal insulation makes it an excellent material to use in the construction of walls and ceilings and its high sound absorption makes it the ideal choice for sound-proofing.

Another recent application of Thermocol (EPS) is as ―Geofoam‖ in landfills. This application is made possible because of Thermocol's (EPS's) light weight, water resistance, dimensional stability and inert nature.

Construction with EPS

By using EPS rigid foam, architects and construction engineers today are also at the same time making use of the opportunity presented by system solutions and incorporate them in their plans appropriately for the functions concerned. The trend is clearly toward specific insulation systems, such as external wall and roof insulation systems, under floor heating systems etc. Such systems give the owner of a building under construction not only considerable cost/benefit advantages but also reduce the risk of technical errors in the planning and execution of work. Even today, 4 decades after its invention, EPS has lost nothing of its attractiveness and is more a part of today's construction industry than ever.

Roof constructions with EPS:

From the viewpoint of construction physics, the roof, no matter of what design, is the most highly stressed party of a building. Heat and Cold, dryness and wetness, storms and snow act from the outside, internal relative humidity acts from inside, either alternately or both at the same time. Roof designs and materials have to be adapted to these conditions if the roof is to fulfill its protective function. Plastics play a significant part in this connection as insulation layers, waterproofing membranes, vapor barriers, underlay, gutters, downpipes and many other functional elements. Whether a flat roof or a pitched roof, whither someone's home or an office building, or factories, workshops or warehouses, whether a roof garden or an underground garage; EPS sheets are always involved because they have outstanding insulation and offer economical answers as insulation systems.

Flat roofs:

Flat roof insulation is an important field of application for EPS (Thermocol) sheets. Depending on the roof design, the insulation material is laid loosely, fixed by hot or cold adhesive or mechanically fastened to the underlying surface. The insulation of a non ventilated flat roof is performed simply and economically by means of insulation units of EPS which have been precoated with roofing felt. The lamination with roofing felt protects the insulating layers when the hot bitumen is applied to fix the roof seal. In the case of rollable insulating sheets, the lamination already counts as the first roof sealing layer. Unlaminated rigid foam boards are used on what are known as tarpaulin roofs. In this case, the insulating boards and the plastic tarpaulin sealing are loosely laid and provided with a ballast (e.g. gravel) or are fixed with special dowels.

Pitched roofs:

In many countries, use of the roof space for living purposes is already a consideration during the planning of a building. Even on existing buildings, roof space is increasingly being developed as additional living areas for guest rooms, play rooms or hobby rooms. Adequate thermal insulation of the roof surface – as the area bounding indoors from outdoors – must be provided. Making the insulating layer adequately thick is also worthwhile with regard to the effect of sunlight in the summer. Suitable for use as insulation in pitched roofs are EPS sheets in the form of filler insulating boards between the rafters, laid on the rafters or in the form of thermally insulating structural composite units. Such insulation systems make economical construction work possible and offer lasting thermal protection. One example of this offers advantages in particular in the case of subsequently installed roof insulation: foam moulded boards with underlying vapour barrier are laid on the existing roof battens. The tiles are then re-laid on the profiled insulating units.

Insulating plaster

A further possibility of improving the thermal insulation of external walls is to coat them with a thermally insulating lightweight plaster. In this case, small, foamed EPS particles are added to the plastering mortar mix, substantially reducing the apparent density of the plaster and thus increasing its thermal insulation. The dry mix is delivered to the construction site in sacks or containers and is prepared ready-for-use just by adding water. Such lightweight EPS plasters can be mechanically processed and sprayed on up to a thickness of 6 cm in a single operation.3 to 5 days after applying the layer of insulating plaster, a mineral plaster is added for surface protection. Depending on the plaster thickness, profiling and surface coating, unconventional façade designs are also possible.

Lightweight concrete

Foamed EPS beads are not only suitable for lightweight plasters, but also for the production of lightweight concrete and porous bricks. The possible applications of EPS concrete as a thermally insulating, light-weight construction material have already been investigated and formulations for various apparent density ranges with different concrete properties developed. From the point of view of structural thermal insulation and economical processing, EPS concretes of particular interest in the low, very light apparent density range; for example as a special prefabricated system in which the tabular cavities in the light-weight EPS concrete wall units are later filled with normal concrete, which undertakes load bearing and reinforcing functions. Recesses or opening

can be cut out simply by using a saw. Or for the production of domed houses, using a blown-up shell on which the EPS concrete is mechanically sprayed.

3. Write notes on Aluminium Composite. Aluminium Composite material:

In the recent technological innovations there is a growing awareness to synthesize Al – alloy composites with an aim to achieve a combination of properties which are not normally available in any one of the constituent phases. Composite materials can be selected to give combination of properties such as stiffness, strength, high temperature performance, corrosion resistance, hardness, conductivity etc. Aluminum matrix composites are finding wide range of applications in automobile, aerospace, defense and general engineering sectors, because of their higher specific strength and stiffness, good wear and seizure resistance and improved high temperature properties as compared to the base alloy. The strength and wear resistance of AMCs were found to be comparable to cast irons. AMCs are lighter than cast iron or steels and the former one have better specific strength and wear resistance as compared to the later one. Thus, considerable efforts are being made to replace these components with AMCs. It will not only improve the life of components but also reduce the weight and improve the fuel efficiency Aluminium composite is a lightweight panel material which is designed for interior and exterior applications. Aluminium Composite sheet has a polyethylene core. This make up 90% of the structure of each sheet. Depending on which brand of Aluminium Composite you use this core will be either a Clear/ Grey or Black colour. The polyethylene core of your Aluminium Composite sheet is faced with two thin sheets of aluminium. This aluminium is bonded onto the core during the manufacturing process and it is virtually impossible to separate the layers of material once they have been bonded. The applications for aluminium composite are wide and varied. Versatile lightweight and durable material aluminium composite performs well for internal and external applications.

Addition of second phase particles to aluminium based alloys has emerged as a potential technique for the development of (aluminium - alloy) composite materials especially suitable for structural and elevated temperature applications. In this case, usually one set of properties is improved at the cost of the other and hence a compromise has to be made in the case of composite materials in this regard. Much lighter than other metal and plastic sheet aluminium composite allows the creation of lightweight yet strong structures. Manufactured from plastic and aluminium this material is easy to handle and simple to machine.

A popular application for aluminium composite is folded structures. From sign trays to fascia panels and column cladding aluminium composite is easy to form and light enough to install easily. Using the correct type of tooling aluminium composite can be scored and then folded.

4. Write notes on Paints Varnishes and Distempers.

Paint is any liquid, liquefiable, or mastic composition that, after application to a substrate in a thin layer, converts to a solid film. It is most commonly used to protect, color, or provide texture to objects. Paint can be made or purchased in many colors—and in many different types, such as watercolor, artificial, etc. Paint is typically stored, sold, and applied as a liquid, but dries into a solid.

The **binder**, commonly called the vehicle, is the film-forming component of paint.

It is the only component that must be present. Components listed below are included optionally, depending on the desired properties of the cured film. The binder imparts adhesion and strongly influences properties such as gloss, durability, flexibility, and toughness.

Binders include synthetic or natural resins such as alkyds, acrylics, vinyl-acrylics, vinyl acetate/ethylene (VAE), polyurethanes, polyesters, melamine resins, epoxy, or oils.

Binders can be categorized according to the mechanisms for drying or curing. Although drying may refer to evaporation of the solvent or thinner, it usually refers to oxidative cross-linking of the binders and is indistinguishable from curing. Some paints form by solvent evaporation only, but most rely on cross-linking processes.

The main purposes of the **diluents** are to dissolve the polymer and adjust the viscosity of the paint. It is volatile and does not become part of the paint film. It also controls flow and application properties, and in some cases can affect the stability of the paint while in liquid state. Its main function is as the carrier for the non volatile components. To spread heavier oils (for example, linseed) as in oil-based interior house paint, thinner oil is required. These volatile substances impart their properties temporarily—once the solvent has evaporated, the remaining paint is fixed to the surface. This component is optional: some paints have no diluent. Water is the main diluent for water-borne paints, even the co-solvent types. Solvent-borne, also called oil-based, paints can have various combinations of organic solvents as the diluent, including aliphatics, aromatics, alcohols, ketones and white spirit. Specific examples are organic solvents such as petroleum distillate, esters, glycol ethers, and the like. Sometimes volatile low-molecular weight synthetic resins also serve as diluents.

Pigments are granular solids incorporated in the paint to contribute color. Fillers are granular solids incorporate to impart toughness, texture, give the paint special properties, or to reduce the cost of the paint. Alternatively, some paints contain dyes instead of or in combination with pigments.

Pigments can be classified as either natural or synthetic. Natural pigments include various clays, calcium carbonate, mica, silicas, and talcs. Synthetics would include engineered molecules, calcined clays, blanc fixe, precipitated calcium carbonate, and synthetic pyrogenic silicas.

Hiding pigments, in making paint opaque, also protect the substrate from the harmful effects of ultraviolet light. Hiding pigments include titanium dioxide, phthalo blue, red iron oxide, and many others.

Fillers are a special type of pigment that serve to thicken the film, support its structure and increase the volume of the paint. Fillers are usually cheap and inert materials, such as diatomaceous earth, talc, lime, barytes, clay, etc. Floor paints that must resist abrasion may contain fine quartz sand as filler. Not all paints include fillers. On the other hand, some paints contain large proportions of pigment/filler and binder.

Some pigments are toxic, such as the lead pigments that are used in lead paint. Paint manufacturers began replacing white lead pigments with titanium white (titanium dioxide), before lead was banned in paint for residential use in 1978 by the US Consumer Product Safety Commission. The titanium dioxide used in most paints today is often coated with silica/alumina/zirconium for various reasons, such as better exterior durability, or better hiding performance (opacity) promoted by more optimal spacing within the paint film.

5. Explain applications of Bitumens.

Bitumen is a sticky, black and highly viscous liquid or semi-solid form of petroleum.

It may be found in natural deposits or may be a refined product; it is a substance classed as a pitch. Bitumen is an oil based substance. It is a semi-solid hydrocarbon product produced by removing the lighter fractions (such as liquid petroleum gas, petrol and diesel) from heavy crude oil during the refining process. As such, it is correctly known as refined bitumen.

The primary use of asphalt/bitumen is in road construction, where it is used as the glue or binder mixed with aggregate particles to create asphalt concrete. Its other main uses are for bituminous waterproofing products, including production of roofing felt and for sealing flat roofs. The vast majority of refined bitumen is used in construction: primarily as a constituent of products used in paving and roofing applications. According to the requirements of the end use bitumen is produced to specification. This is achieved either by refining process or blending. The production of asphalt involves mixing sand, gravel and crushed rock with bitumen, which acts as the binding agent. Other materials, such as polymers, may be added to the bitumen to alter its properties according to the application for which the asphalt is ultimately intended.

85% of all the bitumen produced is used as the binder in asphalt for roads. It is also used in other paved areas such as airport runways, car parks and footways. A further 10% of global bitumen production is used in roofing applications, where its waterproofing qualities are invaluable. The remaining 5% of bitumen is used mainly for sealing and insulating purposes in a variety of building materials, such as pipe coatings, carpet tile backing and paint.

Naturally occurring asphalt/bitumen is sometimes specified by the term "crude bitumen". Its viscosity is similar to that of cold molasses while the material obtained from the fractional distillation of crude oil boiling at 525 °C (977 °F) is sometimes referred to as "refined bitumen".

UNIT-5

MODERN MATERIALS

PART –A (2 MARKS)

1. What is glass?

Glass is a hard. Brittle, amorphous, transparent in-organic material, which is made from the pure iron fine quartz sand or crushed quartzite rock.

2. State the composition of Glass?

Glass is not a single material and which is formed by various constituents.

The general formula of glass is as follows

$$ax_2O,bYO.6Si\ O_2$$

a and b - Number of molecules.

X – Alkali metal atom (Na ,K etc)

Y - Bivalent metal atom (Ca, Pb,etc)

3. State the uses of the Soda- Lime glass?

- Plate glass
- Window glass
- Glass tube
- Laboratory accessories (bottles, containers etc)

4. State the types of glass?

- Soda- lime Glass
- Potash-Lime Glass
- Potash-Lead Glass
- Boro-Silicate Glass
- Common Glass

5. Explain the procedure adopted in the manufacture of glass?

- Raw materials Collection
- Batch Preparation
- Melting
- Fabrication
- Annealing

6. Name the coloring agents used for manufacturing of Glass?

- Antimony Oxide ($Sb2O_2$)
- Arsenic Oxide (As_3O_3)
- Manganese Dioxide (MnO_2)
- Cabalt Oxide (CoO)
- Nickle Oxide (Nio)

7. Define Batch or Frit?

The raw materials, cullet and decolouriser are weighed, and mixed in correct proportions and finely powdered in grinding units. Mixture of the raw materials of glass is called Batch or Frit.

8. What are the various methods of fabrication of glass?

Following are the various methods

- Blowing
- Casting
- Drawing
- Pressing

9. How the glass sheets can be prepared?

The glass sheets can be prepared by Drawing process, and it is the process of pulling the molten glass either by hand or by mechanical equipment. In this method, an iron bar is dipped sideway in the molten mass of glass. It is lifted up horizontally and in doing so, it catches up a sheet of molten glass. This sheet is then allowed to pass over a large rotating roller. The roller helps the molten glass to spread in the form of thin sheet.

10. What are ceramic?

Ceramics are defined as the products or articles or materials, which are produced from the products of heating the earthly materials. Following are the general classification of ceramics ass follows

- Clay products
- Refractories
- Glass

11. What are the Clay tiles?

Clay tiles are the thin slabs of low melting clays, used for various purposes its engineering constructions. These given a very pleasing appearance and good service properties. Roofing tiles, flooring tiles, wall tiles and partition tiles are some of examples.

12. State the properties of good tiles?

- Uniform texture
- Accurate size and shape
- Less water Absorption (less than 15%)
- High Resistance
- High Durability

13. State the properties of the Good clay bricks?

1. Fire-clay bricks are whitish yellow or light brown in colour.
2. The Water absorption of fire clay bricks varies from 4% to 10%
3. The minimum average compressive strength of the bricks should be 3.5N/mm^2.

14. What are the types of fire-clay bricks?

1. Acid Refractory Bricks
2. Base Refractory Bricks
3. Neutral Refractory Bricks

15. Define Refractories?

Refractories are the materials that can with stand high temperature and used in high temperature furnaces. In the use of refractory materials, there are two important principle involved. Thermal insulation and heat conduction.

16. Define Sealant?

Sealant is defined as the substance, used to block the passages of the liquid or air, through the surface or joints or opening in the materials.

17. What are the characteristics of good sealants?

A good sealant should undergo stress and stress relief cycle.
It should be always in tension.
It should be always in shear in lap joints
It should change the shape with the change in the weight of the joints.
It should have good bonding property.

18. Define FRP?

Fiber glass reinforced plastic (FRP). Is definedas the composite material formed by two different materials having different properties.

FRP is sometimes referred as **GRP** (**Glass fiber reinforced plastic**) and in the FRP the glass fiber provides the strength and rigidity and the resin provides a matrix to transfer the load to the fiber.

19. What are the methods of fabrication of FRP?

- Filaments winding.
- Hand lay-up
- Pultrusion
- Resin transfer moulding
- Spray-up

20. Define Composite materials?

Composite materials are defined as the combination of two or more materials having the different properties, differ from those of the individual materials of the composite. The properties of composite materials are always better than any one of the individual materials of the composite.

PART –B (16 MARKS)

1. Explain in detail about Geofabrics.

Geofabrics are also called geosynthesis or geotextiles. These are synthetic fabrics which are sufficiently durable to last a good length of time in soil environment used in geotechnical engineering. Some geofabrics are polyester, nylon, polyethylene and geotechnical engineering. The fabric may be woven, knitted or punched. They are used for the following functions:

1. Drainage paths for water for soil consolidation
2. Separation of different types of soil materials
3. Soil reinforcement in reinforced earth construction
4. Filtration of water from soil.

Geosynthesis are ideal for use in soil as they do not deteriorate by corrosion in the presence of chemicals. They last for a long time when not exposed to direct sunlight and are also not affected by water. They are extensively used for Mechanically Stabilized Earth (MSE) / Reinforced Earth Construction.

Uses

1. As drainage paths to assist consolidation. Geotextiles are used as drainage wicks to assist f=drainage and consolidation of clayey deposits. The modern readymade ―plastic geotextile drain‖ consists of a plastic drain core and a geotextile jacket covering the plastic core pipe. They are efficient for soil drainage to assist in preloading of foundations.

2. As a separation medium. It is used as under railway track, to separate the ballast from sub grade, thus decreasing penetration of ballast into the weak sub grade.

3. As soil reinforcement. These reinforcements are used in the reinforced earth techniques for the following purposes

i) For retaining walls and stability of slopes

ii) For improving the bearing capacity of foundations.

4. As a filtration medium for drainage. In many situations, when used for drainage and separation, it also acts as a filter.

Classification

1. Geotextiles: These materials consist of either woven or non-woven fabrics and are generally used for separation, drainage, filtration and reinforcement. From strength considerations, the strongest of these are woven fabrics, then the resin bonded, melt bonded and finally the needle punched fabrics.

2. Geogrids: They have large openings and are made of materials with high tensile strength, low elongation and dimensional stability. They are made from plain polymer sheets by punching holes in it followed by 2 stretching operations so that a grid is formed. They can be designed to have different strength or same strength in two directions. They are mainly used for soil reinforcement or for separation of materials or for improving bearing capacity of soil.

3. Geomembranes: These materials are available in wide range of permeability. Continuous geomembrane barriers of sufficiently low permeability can be used to control fluid migration in geotechnical engineering while those of high permeability are used for drainage.

4. Linear strips for soil reinforcement: Polymer fibres are made into strips which can be used for reinforced earth in retaining walls. Glass- reinforced plastics are also considered as suitable for soil reinforcement.

Use in Embankments

As the embankments for flyovers in cities should occupy as little width as possible, the use of geotextiles as soil reinforcement for these embankments comes in very handy. Much steeper slopes than normally admissible with earth only can be provided by using soil reinforcement in the embankment. Similarly, consolidation of foundations of many new railway embankments for Indian Railways has been carried out by using plastic geotextile drains instead of old fashioned sand or wick drains.

2. Write notes on types of Glass and its properties.

Silica is the main constituent of glass. But it is to be added with sodium potassium carbonate to bring down melting point. To make it durable lime or lead oxide is also added. Manganese oxide is added to nullify the adverse effects of unwanted iron present in the impure silica. The raw materials are ground and sieved. They are mixed in specific proportion and melted in furnace. Then glass items are manufactured by blowing, flat drawing, rolling and pressing.

Important Properties of Glass:

1. It absorbs, refracts or transmits light. It can be made transparent or translucent.
2. It can take excellent polish.
3. It is an excellent electrical insulator.
4. It is strong and brittle.
5. It can be blown, drawn or pressed.
6. It is not affected by atmosphere.
7. It has excellent resistance to chemicals.
8. It is available in various beautiful colours.

9. With the advancement in technology, it is possible to make glass lighter than cork or stronger than steel.

10. Glass panes can be cleaned easily.

Types of Glass

The glass may be broadly classified as:

1. Soda Lime Glass: It is mainly a mixture of sodium silicate and calcium silicate. It is fusible at low temperature. In the fusion condition it can be blown or welded easily. It is colourless. It is used as window panes and for the laboratory tubes and apparatus.

2. Potash Lime Glass: It is mainly a mixture of potassium silicate and calcium silicate. It is also known as hard glass. It fuses at high temperature. It is used in the manufacture of glass articles which have to with stand high temperatures.

3. Potash Lead Glass: It is mainly a mixture of potassium silicate and lead silicate. It possesses bright lustre and great refractive power. It is used in the manufacture of artificial gems, electric bulbs, lenses, prisms etc.

4. Common Glass: It is mainly a mixture of sodium silicate, calcium silicate and iron silicate. It is brown, green or yellow in colour. It is mainly used in the manufacture of medicine bottles.

5. Special Glasses: Properties of glasses can be suitably altered by changing basic ingradients and adding few more ingradients. It has now emerged as versatile material to meet many special requirement in engineering. The following is the list of some of the special glasses:

(a) Fibre glass
(b) Foam glass
(c) Bullet proof glass
(d) Structural glass
(e) Glass black
(f) Wired glass
(g) Ultraviolet ray glass
(h) Perforated glass.

3. Explain the methods of forming Fibre-reinforced plastic (FRP). Also state its merits and demerits.

Fibre-reinforced plastic (FRP) (also fibre-reinforced polymer) is a composite material made of a polymer matrix reinforced with fibres. The fibres are usually glass, carbon, basalt or aramid, although other fibres such as paper or wood or asbestos have been sometimes used. The polymer is usually an epoxy, vinyl ester or polyester thermosetting plastic, and phenol formaldehyde resins are still in use. FRPs are commonly used in the aerospace, automotive, marine, construction industries and ballistic armor.

The moulding processes of FRP plastic begins by placing the fibre preform on or in the mold. The fibre preform can be dry fibre, or fibre that already contains a measured amount of resin called "prepreg". Dry fibres are "wetted" with resin either by hand or the resin is injected into a closed mold. The part is then cured, leaving the matrix and fibres in the shape created by the mold. Heat and/or pressure are sometimes used to cure the resin and improve the quality of the final part. The different methods of forming are listed below.

Bladder moulding

Individual sheets of prepreg material are laid up and placed in a female-style mould along with a balloon-like bladder. The mould is closed and placed in a heated press. Finally, the bladder is pressurized forcing the layers of material against the mould walls.

Compression moulding

When the raw material (plastic block,rubber block, plastic sheet, or granules) contains reinforcing fibres, a compression molded part qualifies as a fibre-reinforced plastic. More typically the plastic preform used in compression molding does not contain reinforcing fibres. In compression molding, A "preform" or "charge", of SMC, BMC is placed into mould cavity. The mould is closed and the material is formed & cured inside by pressure and heat. Compression moulding offers excellent detailing for geometric shapes ranging from pattern and relief detailing to complex curves and creative forms, to precision engineering all within a maximum curing time of 20 minutes.

Autoclave / vacuum bag

Individual sheets of prepreg material are laid-up and placed in an open mold. The material is covered with release film, bleeder/breather material and a vacuum bag. A vacuum is pulled on part and the entire mould is placed into an autoclave (heated pressure vessel). The part is cured with a continuous vacuum to extract entrapped gasses from laminate. This is a very common process in the aerospace industry because it affords precise control over moulding due to a long, slow cure cycle that is anywhere from one to several hours. This precise control creates the exact laminate geometric forms needed to ensure strength and safety in the aerospace industry, but it is also slow and labour-intensive, meaning costs often confine it to the aerospace industry.

Mandrel wrapping

Sheets of prepreg material are wrapped around a steel or aluminium mandrel. The prepreg material is compacted by nylon or polypropylene cello tape. Parts are typically batch cured by vacuum bagging and hanging in an oven. After cure the cello and mandrel are removed leaving a hollow carbon tube. This process creates strong and robust hollow carbon tubes.

Wet layup

Wet layup forming combines fibre reinforcement and the matrix as they are placed on the forming tool. Reinforcing Fibre layers are placed in an open mould and then saturated with a wet [resin] by pouring it over the fabric and working it into the fabric. The mould is then left so that the resin will cure, usually at room temperature, though heat is sometimes used to ensure a proper cure. Sometimes a vacuum bag is used to compress a wet layup. Glass fibres are most commonly used for this process, the results are widely known as fibreglass, and are used to make common products like skis, canoes, kayaks and surf boards.

Chopper gun

Continuous strands of fibreglass are pushed through a hand-held gun that both chops the strands and combines them with a catalysed resin such as polyester. The impregnated chopped glass is shot onto the mould surface in whatever thickness the design and human operator think is appropriate. This process is good for large production runs at economical cost, but produces geometric shapes with less strength than other moulding processes and has poor dimensional tolerance.

Filament winding

Machines pull fibre bundles through a wet bath of resin and wound over a rotating steel mandrel in specific orientations Parts are cured either room temperature or elevated temperatures. Mandrel is extracted, leaving a final geometric shape but can be left in some cases.

Pultrusion

Fibre bundles and slit fabrics are pulled through a wet bath of resin and formed into the rough part shape. Saturated material is extruded from a heated closed die curing while being continuously pulled through die. Some of the end products of pultrusion are structural shapes, i.e. I beam, angle, channel and flat sheet. These materials can be used to create all sorts of fibreglass structures such as ladders, platforms, handrail systems tank, pipe and pump supports.

RTM & VARTM

Also called resin infusion. Fabrics are placed into a mould which wet resin is then injected into. Resin is typically pressurized and forced into a cavity which is under vacuum in RTM (Resin Transfer Molding). Resin is entirely pulled into cavity under vacuum in VARTM (Vacuum-Assisted Resin Transfer Molding). This moulding process allows precise tolerances and detailed shaping but can sometimes fail to fully saturate the fabric leading to weak spots in the final shape

Advantages and limitations

FRP allows the alignment of the glass fibres of thermoplastics to suit specific design programs. Specifying the orientation of reinforcing fibres can increase the strength and resistance to deformation of the polymer.

Glass reinforced polymers are strongest and most resistive to deforming forces when the polymers fibres are parallel to the force being exerted, and are weakest when the fibres are perpendicular. Thus this ability is at once either an advantage or a limitation depending on the context of use.

Weak spots of perpendicular fibres can be used for natural hinges and connections, but can also lead to material failure when production processes fail to properly orient the fibres parallel to expected forces.

When forces are exerted perpendicular to the orientation of fibres the strength and elasticity of the polymer is less than the matrix alone.

In cast resin components made of glass reinforced polymers, the orientation of fibres can be oriented in two-dimensional and three-dimensional weaves. This means that when forces are possibly perpendicular to one orientation, they are parallel to another orientation; this eliminates the potential for weak spots in the polymer.

Failure modes

Structural failure can occur in FRP materials when:

Tensile forces stretch the matrix more than the fibres, causing the material to shear at the interface between matrix and fibres.

Tensile forces near the end of the fibres exceed the tolerances of the matrix, separating the fibres from the matrix.

Tensile forces can also exceed the tolerances of the fibres causing the fibres themselves to fracture leading to material failure.

4. Discuss about the manufacture and properties of Clay Products.

Structural clay products, ceramic products intended for use in building construction. Typical structural clay products are building brick, paving brick, terra-cotta

facing tile, roofing tile, and drainage pipe. These objects are made from commonly occurring natural materials, which are mixed with water, formed into the desired shape, and fired in a kiln in order to give the clay mixture a permanent bond. Finished structural clay products display such essential properties as load-bearing strength, resistance to wear, resistance to chemical attack, attractive appearance, and an ability to take a decorative finish.

Manufacture

Structural clay products are made from 35 to 55 percent clays or argillaceous (clayey) shales, 25 to 45 percent quartz, and 25 to 55 percent feldspar. As with all traditional ceramic products, the clay portion acts as a former, providing shaping ability; the quartz (silica) serves as filler, providing strength to the formed object; and the feldspar serves as a fluxing agent, lowering the melting temperatures of the clay and quartz during firing. The proportions cited above are often found directly in shale deposits, so that blending is often not necessary. In addition, little or no beneficiation, or crushing and grinding of the mined material, is employed. Local clays or shales of highly variable composition are used in order to keep transportation costs as low as possible. The colour of the finished product derives from impurities, most notably iron oxides, present in the raw materials. Colours can range from buff and other light shades of brown through red to black, depending upon whether an oxidizing or reducing atmosphere exists in the kiln.

In the processing of structural clay products, stiff-mud plastic-forming operations predominate—for example, pressing operations for brick and extrusion for brick or pipe. Formed objects are usually fired in continuous conveyor belt or railcar operations, with the ware, as it traverses the tunnel kiln, proceeding from room temperature into a hot zone and finally to a cooler zone at the other end.

Properties

The properties exhibited by structural clay products are determined by particle size, firing temperature, and ultimate microstructure. Compared with finer ceramic products such as whitewares, much coarser filler particles are used, and lower firing temperatures are employed—typically in the range of 1,050° to 1,100° C (approximately 1,925° to 2,000° F). At such low temperatures the filler particles (usually crushed quartz) are normally not affected. Instead, the clay or shale ingredients contain sufficient impurities to melt and form a glass, thus bonding the particles together. As is the case with whitewares, crystalline mullite needles grow into this glassy phase. The resulting microstructure consists of large secondary particles embedded in a matrix of fine-grained mullite and glass—all containing a substantial volume of large pores.

Because of the presence of large and small particles in their microstructures, fired clay products have relatively high compressive strengths. This ability to bear relatively heavy loads without fracture is the prime property qualifying these products for structural applications. The size and number of pores is also important. If underfired, structural clay products have low strength and poor resistance to frost and freezing, owing to the presence of many small pores in the clay regions. Overfired ware, on the other hand, has too much glass. It is strong but brittle and is susceptible to failure under mechanical and thermal stress. Furthermore, it is impossible to obtain a good bond when glassy products

are used with mortars. Small pores and high glass content are desirable, however, when chemical resistance and imperviousness to water penetration are required.

Products

By some estimates structural clay products make up as much as 50 percent of the entire ceramics market. The industry is highly conservative, with development aimed primarily at automation and labour minimization rather than the introduction of new products.

There is a wide variety of structural clay products, broadly classified as facing materials, load-bearing materials, paving materials, roofing tile, and chemically resistant materials. Examples of facing materials are face brick, terra-cotta, brick veneer, sculptured brick, glazed brick and tile, and decorative brick. Building brick, hollow brick, and structural tile for floors and walls are examples of load-bearing materials. Paving materials include light traffic pavers, quarry tile, and paving brick—this last product once in more common use than at present. Roofing tiles are quite common in many parts of the world, red and black colours being of particular note. Chemically resistant materials include sewer pipe, industrial floor brick, drain tile, flue liners, chimney brick, and chemical stoneware.

5. Laminar composites

A laminar composite is a composite material that consists of two or more layers of different materials that are bonded together. They are also called laminated composites or laminates. A laminate usually consists of two or more layers of planar composites in which each layer (also called lamina or ply) may be of the same or different materials. Similarly, a sandwich laminate is a composite construction in which a metallic or composite core layer is sandwiched between two metallic or composite face layers. The composite face layers may also be in the form of laminates. Laminated and sandwich composite structures are very strong and stiff, and are commonly recommended for lightweight structural applications. In materials science, Composite laminates are assemblies of layers of fibrous composite materials which can be joined to provide required engineering properties, including in-plane stiffness, bending stiffness, strength, and coefficient of thermal expansion.

The individual layers consist of high-modulus, high-strength fibers in a polymeric, metallic, or ceramic matrix material. Typical fibers used include graphite, glass, boron, and silicon carbide, and some matrix materials are epoxies, polyimides, aluminium, titanium, and alumina.

Layers of different materials may be used, resulting in a hybrid laminate. The individual layers generally are orthotropic (that is, with principal properties in orthogonal directions) or transversely isotropic (with isotropic properties in the transverse plane) with the laminate then exhibiting anisotropic (with variable direction of principal properties), orthotropic, or quasi-isotropic properties. Quasi-isotropic laminates exhibit isotropic (that is, independent of direction) inplane response but are not restricted to isotropic out-of-plane (bending) response. Depending upon the stacking sequence of the individual layers, the laminate may exhibit coupling between inplane and out-of-plane response. An example of bending-stretching coupling is the presence of curvature developing as a result of in-plane loading.