UNIT I

SITE INVESTIGATION AND SELECTION OF FOUNDATION

PART A

1. **Differentiate disturbed and undisturbed samples? (May – June 2016)**

   Disturbed samples: The structure of the soil is disturbed to the considerable degree by the action of the boring tools or the excavation equipments.
   Undisturbed samples: It retains as closely as practicable the true in situ structure and water content of the soil.

2. **What are the limitations of static cone penetration test? (May – June 2016)**
   - High capital investment
   - Requires skilled operator to run
   - Electronic drift, noise and calibration
   - No soil samples are obtained
   - Unsuitable for gravel or boulder deposits

3. **What is meant dilatancy? (Nov – Dec 2015)**
   Silt fine sands and fine sands below the water table develop pore water pressure which is not easily dissipated. The pore pressure increases the resistance of the soil and hence the penetration number (N).

   Terzaghi and Peck (1967) recommend the following correction in the case of silty fine sands when the observed value is N exceeds 15.

   The corrected penetration number $(N_C)=15+1/2(N_R-15)$

   Where N_R is the recorded value and N_C is the corrected value.

4. **Write the uses of bore hole report? (Nov – Dec 2015)**
   - Provides information on subsurface conditions obtained from boring operation
   - Gives a continuous record of various strata identified at various depths of the boring
   - Description or classification of various soil and rock types encountered and data regarding ground water level is given in pictorial manner.

5. **Differentiate: Non representative and undisturbed samples? (Apr/May2015) (Apr/May 2010)**
   Representative samples: contain all the mineral constituents of the soil, but the structure of soil may be significantly disturbed.

Non representative samples: consist of mixture of materials from various soil or rock strata or are samples from which mineral constituents have been lost or mixed up.

6. **How do you decide the depth of exploration? List the factors you will consider. (May /June 2015) (May/June 2014) (Apr/May 2010)**

1. Isolated spread footing or raft : one and a half times the width.
2. Adjacent footings with clear spacing less than twice the width: One and a half times the length.
3. Pile foundation: 10 to 30 metres, or more, or at least one and a half times the width of the structure.
4. Base of the retaining wall: One and a half times the base width or one and a half times the exposed height of face of wall, whichever is greater.
5. Floating basement: Depth of construction.
6. Weathering considerations: 1.5 m in general and 3.5 m in black cotton soils.

7. **What is meant by significant depth of investigation? (Nov/Dec 2014)**

This depth of investigation is generally taken as the depth upto a level at which pressure intensity becomes 10% of 'q', where 'q' is the intensity of loading at the base of the foundation.

8. **What are the functions of drilling mud? (Nov/Dec 2014)**

Remove cuttings from well.
Suspend and release cuttings.
Control formation pressures.
Seal permeable formations.
Maintain bore stability.
Minimizing formation damage.
Cool, lubricate, and support the bit and drilling assembly.

9. **What is the importance of site investigation? (May /June 2014)**

Site investigation covers a thorough study of

- Identifying the soil profile both vertical and longitudinal sections in the subsoil of earth.
- Locating stable ground water table
- Developing bore log and soil profile.
- To arrive feasibility and viability of the site for the proposed project.

10. **What is meant by inside and outside clearance ? (Nov/Dec 2013)**

Inside clearance = (It should lie b/w 1-3)
Outside clearance =

11. List the field tests commonly used in subsurface investigation? (Nov-Dec 2013)

Standard penetration test
Static cone penetration test
Dynamic cone penetration test
Insitu vane shear test.

12. What is the objective of soil exploration? (May / June 2013)

Objective of soil exploration is to obtain information as base for:

1. Selection of type and depth of foundation
2. Determination of bearing capacity of the selected foundation.
3. Prediction of settlement of selected foundation
4. Establishing ground water level.
5. Evaluation of earth pressure against walls.

13. What is site reconnaissance? (May / June 2013)

Site exploration is an inspection of the site and study of topographical features which helps in getting useful information about the soil and ground water conditions and in deciding the future programme of exploration.

14. Why the electrical resistivity method is not as reliable as seismic method ? (Nov/Dec 2012)

Deep investigations require long cables and consume much field time.
Interpretation of complex geologic structures is difficult and ambiguous.
Presence of metal pipes, cables, fences and electrical grounds can complicate interpretation.
Accuracy of depth determination is lower than with seismic techniques.

15. Determine the area ratio of a soil sampler with 51mm and 48mm outer and inner diameters respectively. (Nov/Dec 2012)

Given data:

$D_1 = 48mm$,
$D_0 = 51mm$

Area Ratio ,A_r

$$= \frac{D_o^2 - D_i^2}{D_i^2} \times 100\%$$

$$= 12.0\%$$

16. **What are the limitations of hand augers in soil exploration? (May /June 2012)**

a) Hand augers are suitable only for cohesive and soft soils above water table.

b) They are suitable for depths up to about 6m.

17. What are the guidelines in terms of inside clearance and outside clearance for obtaining undisturbed sample? (May /June 2012)

The inside clearance should lie between 1 to 3 per cent and outside clearance should not be much greater than the inside clearance.

18. What is meant by a non-representative sample? (Nov/Dec 2011)

Non-Representative soil samples are those in which neither the in-situ soil structure, moisture content nor the soil particles are preserved.

- They are not representative
- They cannot be used for any tests as the soil particles either gets mixed up or some particles may be lost.
- Samples that are obtained through wash boring or percussion drilling are examples of non-representative samples

19. In a rock core drilling, the sum of lengths of rock pieces having length more than 100mm is 750mm. If the length of run is 1m find RQD. (Nov/Dec 2011)

RQD = 750/1000 = 75% or 0.75

20. What are the various methods of site exploration? (Nov/Dec 2010)

1. Open Excavation
2. Borings
   (a) Auger boring
   (b) Shell boring
   (c) Wash boring
3. Sub- Surface soundings
4. Geophysical method

21. What are the factors affecting the quality of a sample? (May/June 14) (Nov/Dec2010)

The following are the factors affecting quality of the sample.

Cutting edge
Inside clearance
Outside clearance
Inside wall friction
Non-return valves

22. What are the advantages and disadvantages of Static Cone Penetration test over boring and sampling?

Advantages:

- Economical for larger depth.
- Even thin loose pockets can be identified.
- Does not need Bore hole.

Disadvantages:

- Samples cannot be collected & hence classification not possible.
- WT cannot be located.

PART B

1. **Why SPT 'N' value recorded in sand at different depths are corrected for overburden and submergence? How are the corrections applied? (May /June 2016) (May/June 2014) (May/June 2012) (May/June 2010).**

Standard Penetration Test.:

The standard Penetration Test is the most commonly used in – site test, especially for cohesion less soils which cannot be easily sampled, the test is extremely useful for determining the relative density and the angle to determine the UCC strength of the cohesive soil.

The standard penetration test is conducted in a bore hole using a standard split spoon sampler, when the bore hole has been drilled to the desired depth, the drilling tools are removed and the sampler is lowered to the bottom of the hole. The sampler is driven into the soil by a drop hammer of 63.5kg mass falling through a height of 750mm at the rate of 30blows per minutes.

The number of hammer blows required to drive 150mm of the sample is counted. The sampler is further driven by 150mm and the number of blows recorded. Likewise the sampler is once again further driven by 150mm and the number of blows recorded. The number of blows recorded for the first 150mm is disregarded. The plumber of blows recorded for the last two 150mm intervals are added to give the standard Penetration Number (N). In other words, the standard Penetration number is equal to the number of blows required for 300mm of penetration beyond a seating drive of 150mm.

If the number of blows for 150mm drive exceeds 50, it is taken as refusal and the test is discontinued. The standard Penetration number is corrected for decadency correction and our burden correction.

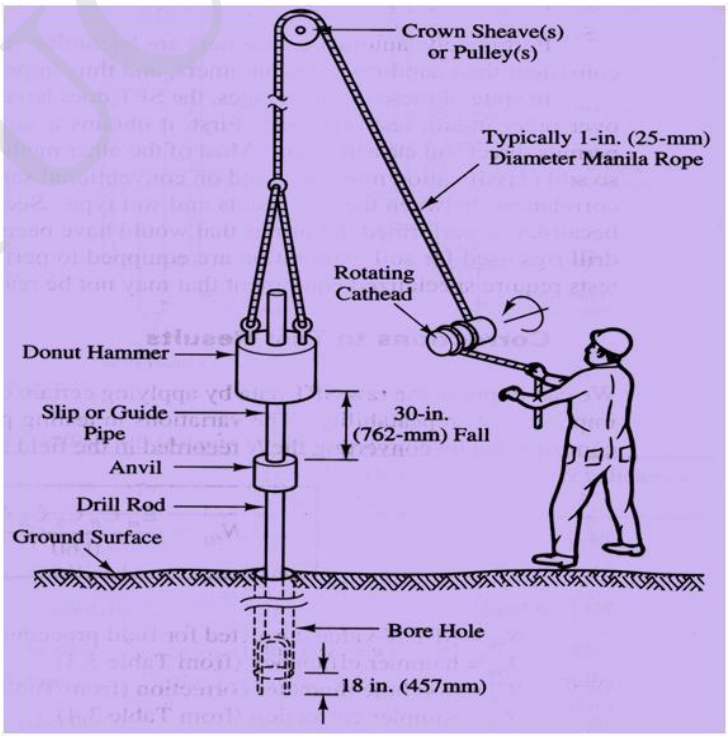

(a) Dilatancy Correction.

Terzaghi and peck recommend the following correction when the observed N value exceeds 15. The corrected Penetration Number,

$N_c = 15 + ½ [N_R – 15]$

Where, N_c – corrected value

N_R – Recorded Value

If $N_R \leq 15$, then $N_c = N_R$

(b) Over burden Pressure Correction:

For dry or moist clean sand, (Gibbs and Holtz)

$$N_c = \frac{N_R \times 350}{\bar{\sigma}_0 + 70}$$

Where, N_c - corrected value

N_R - Recorded Value

$\bar{\sigma}_0$ - effective over burden pressure

It is applicable for $\bar{\sigma} \leq 280 kN/m^2$. Usually the overburden correction is applied first and then dilatancy correction is applied first and then dilatancy correction is applied.

2. Explain wash boring method. (May /June 2016)(Nov/Dec 2014)

In wash boring, the hole is drilled by first driving a casing about 2 to 3m long and then inserted into a hollow drill rod with a chisel shaped chopping bit at its lower end. Water is pumped down the hollow drill rod, which is known as wash pipe.

Water emerges as a strong jet through a small opening of the chopping bit. The hole is advanced by a combination of chopping action and the jetting action as the drilling bit and the accompanying water jet disintegrates the soil.

The water and chopped soil particles rise upward through the annular space between the drill rod and the casing. The return water also known as wash water which is collected in a tub through a T-shaped pipe fixed at the top of the casing.

The hole is further advanced by alternately raising and dropping the chopping by a winch. The swivel joint provided at the top of the drill rod facilitates the turning and twisting of the rod. The process is continued even below the costing till the hole begins to cave in. At that stage the bottom of the casing can be extended by providing additional pieces at the top.

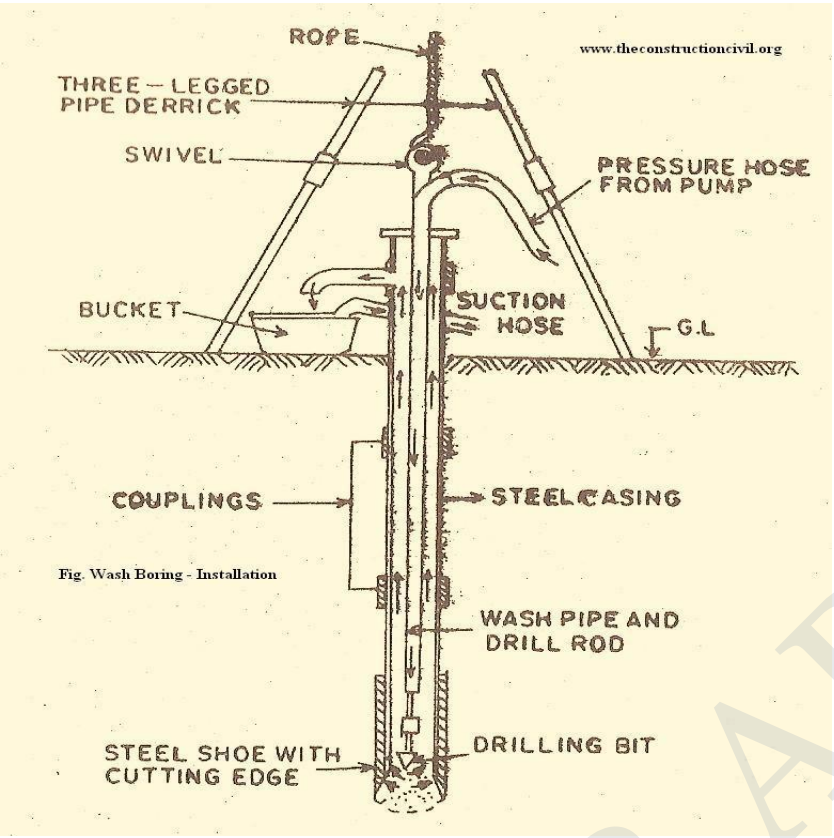

Fig. Wash Boring - Installation

However in stable, cohesive soils the casing is required only in the top portion. Sometimes instead of casing, special drilling fluids made of suspension or emulsion of fat clays or bentonite combined with some special additives are used for supporting walls of the hole.

The change in strata is provided by the reaction of the chopping bit as the hole is advanced. It is also indicated by a change in colour of the wash water. The wash boring is mainly used for advancing a hole in the ground. Once the hole has been drilled, a sampler is inserted to obtain soil samples for testing in the laboratory.

The equipment used in wash boring is relatively light and inexpensive. The main disadvantage of the method is that it is slow in stiff soils and coarse grained soils. It cannot be used efficiently in hard soils, rocks and the soil containing boulders.

The method is not suitable for taking good quality undisturbed samples above ground water table, as the wash water enters the strata below the bottom of the hole and causes an increase in its water content.

3. Explain the arrangements and operation of stationary piston sampler. State its advantages over other samplers. (May/June 2016) (May/June 2012)

Stationary piston sampler consists of a sampler with a piston attached to a long piston rod extending up to the ground surface through the drill rods. The lower end of the sampler is kept closed with piston while the sampler is lowered through the bore hole.

When the desired elevation reached, the piston rod is clamped; thereby keeping the piston stationary and the sampler tube is advanced further into the soil. The sampler is then lifted and the

piston rod clamped in position. The piston prevents the entry of water and soil into the tube, when it is being lowered and also helps to retain the sample during the process of lifting the tube.

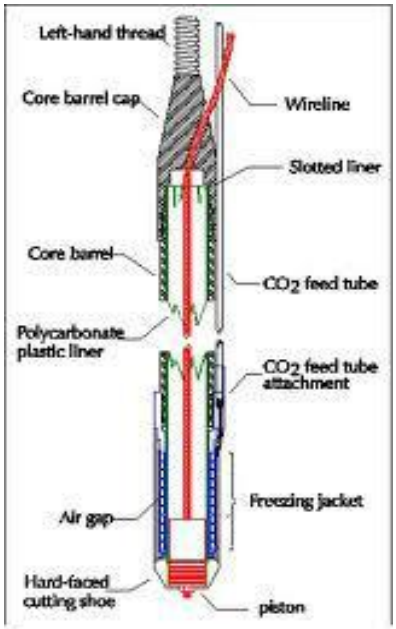

Figure 1. A cross-sectional view of the sample-freezing drive shoe attached to the Solinst core barrel. The scale is broken; the sampler is about 6.5 ft (2 m) long and 3 in. (76 mm) in diameter.

The sampler is therefore very much being suited for sampling in soft soils and saturated sands.

4. Explain the salient features of bore log report. (May/June 2016)(May/June 2012)

TEST PIT LOG

Report Date: 6/15/99	**Pit No.:** 001
Company Name: ACME ENVIRONMENTAL LTD	**Surface Elevation:** 425 ft msl
Site Name: Texaron Service Station	**Total Depth:** 10.4 ft
Location: Section 22, T7S, R8W N425789, E259874 Gibson County IN	**Start:** 01/01/2000 at 7:00am
Logged By: C. Dana Chicago IL	**Finish:** 01/01/2000 at 7:00pm
Contractor: Magmun Drilling Evansville, IN	**Equipment Type:** Cat 442
Conditions: Cold and Clear	**Pit Dimensions:** 30ft x 20ft x 10.4
Comments: 1500 gallon diesel UST removal	**Sampling Methods:** grab

Graphical Log	Top Depth (ft)	Thick. (ft)	Bt.Elev. (ft)	Strata Code	Material Description	Sample No.	Sampling Method	Remarks
	0.0	1.5	423.5		Topsoil			
	1.5	4.0	419.5		Brown, silt with minor sand, root structures, moist	001	grab	sample at 3.0 ft bls, slight petroleum odor, HNU reading 200
	5.5	1.0	418.5		Brown finegrained sand, wet	002	grab	sample at 6.0 ft, strong petroeum odor, HNU reading 1125
	6.5	2.7	415.8		brown slightly sandy clay, moist	003, 004		sample at 7.0 ft, slight pretroleum odor, HNU reading 300 sample at 8 ft, no petroeum odor, HNU reading 0.
	9.2	1.2	414.6		dark brown clayey silt with trace of gravel	005		sample at 10 ft, no petroleum odor, HNU reading 0.

10.4 ft T.D.

EASYSOLVE SOFTWARE LLC
1531 East 10th Street, Craig, Colorado 81625
www.easysolve.com (970) 824-0113

Page 1 of 1

A soil exploration report generally consists of the following:

1. Introduction, which gives the scope of the investigation.
2. Description of the proposed structure, the location and the geological conditions at the site.
3. Details of the field exploration programme, indicating the number of borings, their location and depths.

4. Details of the method of exploration.
5. General description of the sub- soil conditions as obtained from in-sites tests, such as standard penetration Test, cone test.
6. Details of the laboratory test conducted on the soil samples obtained and the results obtained.
7. Depth of ground water table and the change in water levels.
8. Discussion of the results.
9. Recommendation about the allowable bearing pressure, the type of foundation or structure.
10. Conclusion: The main findings of the bore hole investigations should be clearly stated.

5. Explain in detail the geophysical methods of site exploration with neat sketch.

(Nov /Dec 2015) (Nov/Dec 2013) (May/June 2013) (Nov/Dec 2012)

1. Electrical resistivity method

This method is based on the measurement of changes in the mean resistivity or the apparent specific resistance of various soils. The test is done by driving four metal spikes to act as electrodes into the ground along a straight line at equal distances. This is shown in the figure. Direct voltage is applied between the two outer potentiometer electrodes and then mean for the potential drop between the inner electrodes is calculated.

Mean resistivity (Ohm-cm)

$$\rho = 2\pi D \frac{E}{I} = 2\pi D R$$

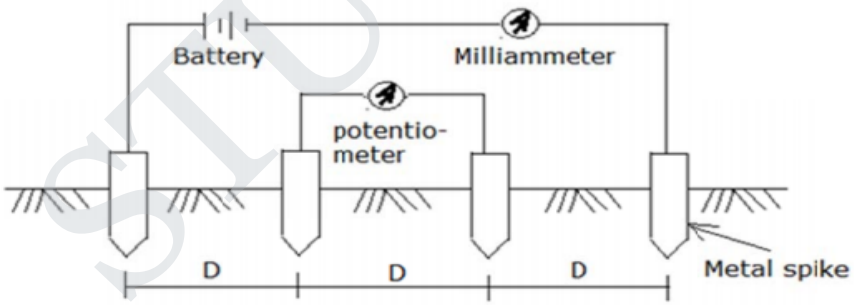

Where,

D = distance between the electrodes
E = potential drop between outer electrodes
I = current flowing between outer electrodes
R = resistance

Resistivity mapping : This method is used to find out the horizontal changes in the subsoil, the electrodes kept at a constant spacing, are moved as a group along the lines of tests.

Resistivity sounding: This method is used to study the vertical changes, the electrode system is expanded about a fixed central point by increasing the spacing gradually from an initial small value to a distance roughly equal to the depth of exploration desired.

2. Seismic refraction method:

The seismic refraction method is based on the fact that seismic waves have different velocities in different types of soils or rocks. The waves refract when they cross boundaries between different types of soils.

If artificial impulses are produced either by detonation of explosives or mechanical blows with a heavy hammer at the ground surface or at a shallow depth within a depth, these shocks generate three types of waves.

In general only compression waves are observed. These waves are classified either as direct, reflected or refracted wave. Direct waves travel in approximately straight lines from the source of the impulse to the surface.

Reflected or refracted waves undergo a change in direction when they encounter a boundary, a separating media of different seismic velocities. The method starts by inducing impact or shock waves into the soil at a particular location. The shock waves are picked up by geophones.

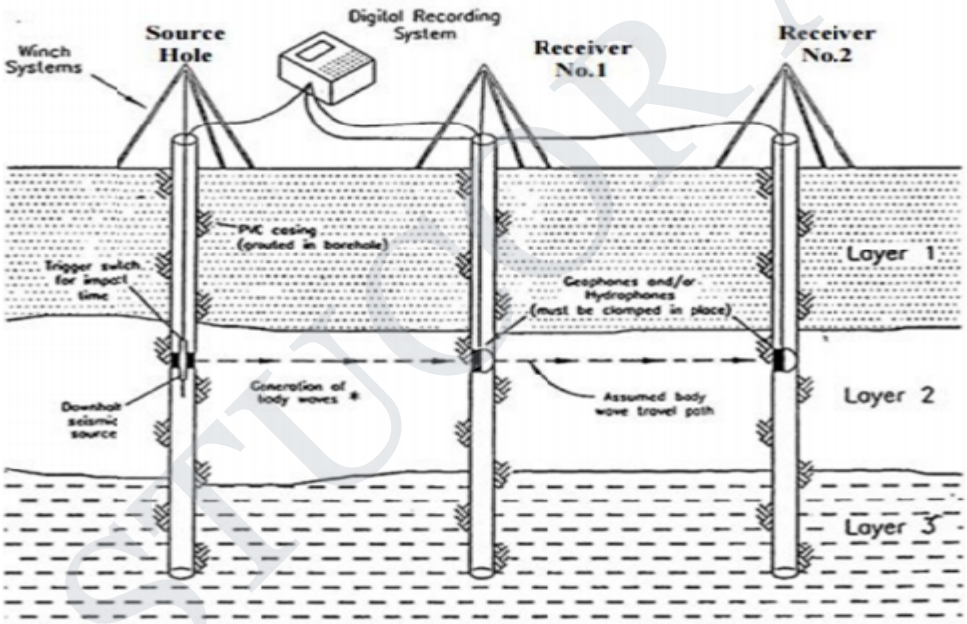

6. Write notes on **(Nov /Dec 2015)**

a. Selection of foundation based on soil condition **(May/June 2010)**

1. Compact sand deposit – spread footing

2. Firm clay or silty clay extending to greater depth – spread footing

3. Soft clay – spread footing for medium loading

Deep foundation - heavy loading

4. loose sand to great depth – spread footing, raft foundation

5. Soft clay but firmness increasing with the depth - friction piles, raft foundation or floating foundation

6. Hard clay – spread footing

7. Medium dense sand – deep foundation cast in place type

b. Disturbed and undisturbed soil sample. (May/June 2014)

Disturbed samples: The structure of the soil is disturbed to the considerable degree by the action of the boring tools or the excavation equipments.

The disturbances can be classified in following basic types:
Change in the stress condition,
Change in the water content and the void ratio,
Disturbance of the soil structure,
Chemical changes,
Mixing and segregation of soil constituents

The causes of the disturbances are listed below:
Method of advancing the borehole,
Mechanism used to advance the sampler,
Dimension and type of sampler

Undisturbed samples: It retains as closely as practicable the true insitu structure and water content of the soil. For undisturbed sample the stress changes can not be avoided.

The following requirements are looked for:
No change due to disturbance of the soil structure,
No change in void ratio and water content,
No change in constituents and chemical properties.

c. Uses of soil exploration

The uses of soil exploration are to obtain information as bases for:

New structures:

1. The selection of depth and type of foundation
2. Determination of bearing capacity of the selected foundation
3. Prediction of settlement of the selected foundation.
4. Establishing of ground water table level.
5. Evaluation of earth pressure against walls, abutments.
6. Provisions against construction difficulties.
7. Suitability of soil and degree of compaction of fill.

Existing structures

1. Investigation of safety of structures

2. Determination of remedial measures in case of failure.

Highways and airfields

1. Location of the road both vertically and horizontally
2. Location and selection of borrow material for fills and subgrade treatment.
3. Design and location of ditches, culverts and drains.
4. Design of roadway sections.
5. Need and type of subgrade treatment

7.Explain with sketches SCPT test. (Nov/Dec 2013) (Nov/Dec 2012)

The Dutch cone has an apex angle of 60 and an overall diagram of 35.7mm giving an overall diagram of 35.7mm giving an end area of 10cm2. For obtaining the cone resistance, the cone is pushed downward at a steady rate of 10mm/sec through a depth of 35mm each time. The cone is pushed by applying thrust and not by driving.

After the cone resistance has been determined the cone is withdrawn. The sleeve is pushed onto the cone both are driven together into the soil and the combined resistance is also determined. The resistance of the sleeve alone is obtained by subtracting the cone resistance from the combined resistance.

A modification of the dutch cone pentrometers is the refined dutch cone. It has got a friction sleeve of limited length above the cone point. It is used for obtaining the point resistance of the cone and the frictional resistance of the soil above cone point.

For effective use of the cone penetration test, some reliable calibration is required. This consists of comparing the results with those dutch cone obtained from conventional tests conducted on undisturbed sample in a laboratory. It is also convenient to compare the cone test results with SPT results, are related to the SPT number N, indirect correlations are obtained between the cone tests and the engineering properties of the soil.

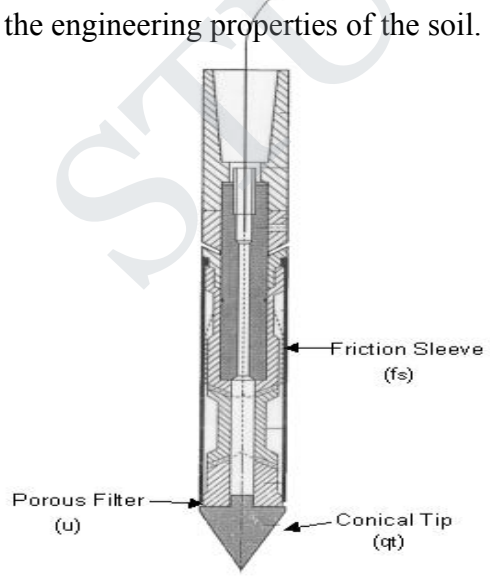

Typical 15cm² CPT probe showing the relative location of each component

The following relation holds approximately good between the point resistance of the cone (9c) and the standard penetration Number (N)

i) Gravels9c = 800N to 1000N

ii) Sands 9c = 500N to 600N

iii) Silly sands 9c = 300N to 400N

iv) Sills & clayey 9c = 200N where 9c is in KN/m2 silts

8. Explain any two types of soil samplers. (May /June 2013)

Standard split spoon sampler

It consists of tool-steel driving shoe at the bottom, a steel tube (that is split longitudinally in to halves) in the middle, and a coupling at the top. The steel tube in the middle has inside and out side diameters of 34.9mm and 50.8mm, respectively.

When the bore hole is advanced to a desired depth, the drilling tools are removed. The split-spoon sampler is attached to the drilling rod and then lowered to the bottom of the bore hole. The sampler is driven in to the soil at the bottom of the bore hole by means of hammer blows. The hammer blows occur at the top of the drilling rod. The hammer weights 623N. For each blow, the hammer drops a distance of 0.762m. The number of blows required for driving the sampler through three 152.4mm interval is recorded. The sum of the number of blows required for driving the last two 152.4mm intervals is referred to as the standard penetration number; N. it is also commonly called the blow count. After driving is completed, the sampler is with drawn and the shoe and coupling are removed. The soil sample collected inside the split tube is then removed and transferred to the laboratory in small glass jars. Determination of the standard penetration number and collection of split-spoon samples are usually done at 1.5m.

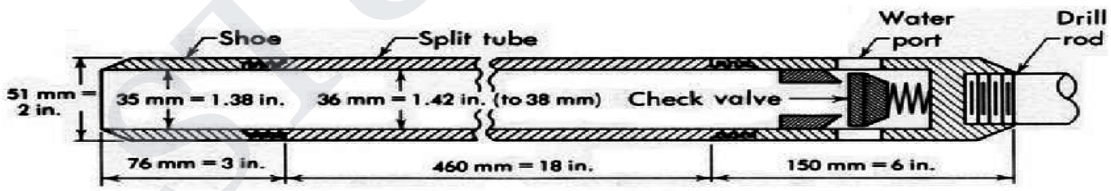

2. Open-drive samplers

Undisturbed samples are may be obtained from boreholes by open drive samplers or piston samplers. Open drive samples consist of thin-walled tubes which are pushed or driven in to the soil at the bottom of the hole and then rotated to detach the lower end of the sample from the soil. Most soft or moderately stiff cohesive soil can be sampled without extensive disturbance in thin-walled seamless steel tubes having diameter not less 50 mm. the lower end of the tube is sharpened to from a cutting edge and the other end is machined for attachment to the drill rods. The entire tube is pushed or driven in to the soil at the bottom of the hole and is removed sample with inside. The two ends of the tube are then sealed and sample shifted to the laboratory.

3. Piston type sampler

Good quality undisturbed samples are obtained from piston samplers which use thin-walled sampling tubes with a piston inside. While the tube is being lowered to the bottom of the drill hole, the piston rods and piston are held at the bottom of the sampler by means of a drill rod. which rises to the top of the bore hole. The presence of the piston prevents excess soil from squeezing in to the tube and thus, maintains the integrity of the sample.

9. How are the depth and spacing of boreholes determined for site investigation of following projects? (May/June 2012)

a) Building

b) Highway

c) Dam

d) Pipelines

The spacing of borings or the number of boring for a project is related to the type, size and weight of the proposed structure, to the extent of variation in soil conditions that permits safe interpolation between borings, to funds available, and possibly to the stipulations of a local code building.

It is impossible to determine spacing of boring before an investigation begins, since it depends on the uniformity of the soil deposit. Ordinarily a preliminary estimate of the spacing is made. Spacing is decreased if additional data are necessary and is increased if the thickness and depth of the different strata appear about the same in all borings.

S.NO	NATURE OF PROJECT	SPACING OF BORING
1.	Highway	300 to 600
2.	Earth dam	30 to 60
3.	Borrow pits	30 to 120
4.	Multi-storey building	15 to 30
5.	Single story factories	30 to 90

The depths of borings for building are about 3.5m and 6.5m for single and two storey buildings. For dams and embankments, the depth ranges between half the height to twice the height depending upon the foundation soil.

10. The inner diameters of sampling tube and that of cutting edge of a sampler are 70mm and 68mm respectively, their outer diameters are respectively 72mm and 74mm. Determine the inside clearance, outside clearance and area ratio of the sampler. Comment on the suitability of sampler for collecting undisturbed sample. (Nov/Dec 2011)

Solution

I_c = 70 - 68 / 68 = 2.9 % between 1 & 3 % OK
O_c = 74 - 72 / 72 = 2.8 % between 1 & 3 % OK
$A_R = 74^2 – 68^2 / 68^2$ = 18.4 % > 10 % NOT OK

Not suitable

11. Explain with a neat sketch, how rotary drilling is done? (Nov/Dec 2011)

Rotary drilling method of boring is useful in case of highly resistant strata. It is related to finding out the rock strata and also to access the quality of rocks from cracks, fissures and joints. It can conveniently be used in sands and silts also.

Here, the bore holes are advanced in depth by rotary percussion method which is similar to wash boring technique. A heavy string of the drill rod is used for choking action. The broken rock or soil fragments are removed by circulating water or drilling mud pumped through the drill rods and bit up through the bore hole from which it is collected in a settling tank for recirculation.

If the depth is small and the soil stable, water alone can be used. However, drilling fluids are useful as they serve to stabilize the bore hole. Drilling mud is slurry of bentonite in water. The drilling fluid causes stabilizing effect to the bore hole partly due to higher specific gravity as compared with water and partly due to formation of mud cake on the sides of the hole.

As the stabilizing effect is imparted by these drilling fluids no casing is required if drilling fluid is used. This method is suitable for boring holes of diameter 10cm, or more preferably 15 to20cm in most of the rocks. It is uneconomical for holes less than 10cm diameter. The depth of various strata can be detected by inspection of cuttings.

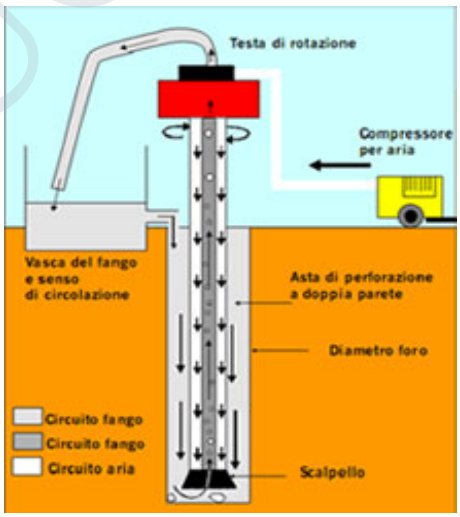

UNIT II

SHALLOW FOUNDATIONS

PART A

1. What are the modes of failure of shallow foundations?(May/June 16) (Nov / Dec 12)

General shear failure
Local shear failure
Punching shear failure

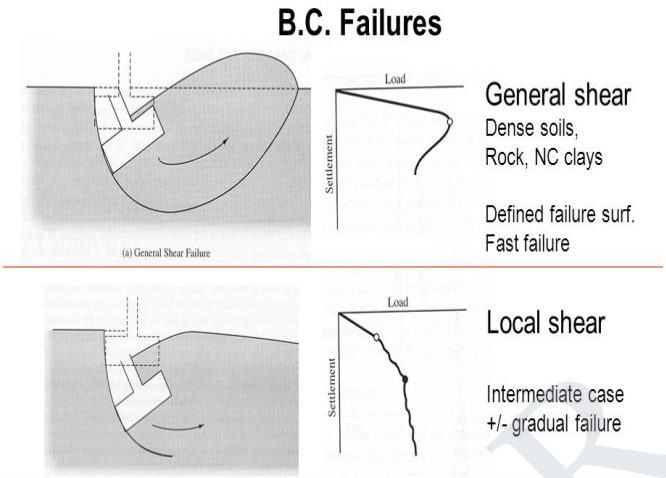

2. List various methods of minimising total and differential settlement. (May/June 2016)

Settlement can be minimised or bearing capacity may be improved by various methods.

- Improving the soil character by any method of soil stabilization or removal of soft soil strata, consistent with economy.
- Building slowly on cohesive soils to avoid lateral expulsion of soil mass and to give time for the pore water to be expelled by the surcharge load.
- Selection of suitable foundation system to distribute structural loads as smooth pressure on soils.
- Take precautionary measures to avoid soil disturbances in the surroundings of the structures and also below the structural foundations.
- Pre-consolidation of a building site long enough for the expected load, depending upon the tolerable settlements

3. What is the allowable maximum settlement of commercial, industrial and ware house building? (Nov/Dec 2015)

Commercial building : 25mm

Industrial building : 38mm

Warehouse : 50mm

4. What is the ultimate bearing capacity of a circular footing of 1.5m diameter resting on the surface of saturated clay of unconfined compressive strength of 100 kN/m². Take N_c = 5.7, N_q = 1, N_r = 0. (Nov/Dec 2015)

5. What factors determine whether a foundation is shallow or deep? (Apr/May 2015)

Shallow foundation – If the depth is equal to less than the depth.
Deep foundation – If the depth is equal to or greater than the width.

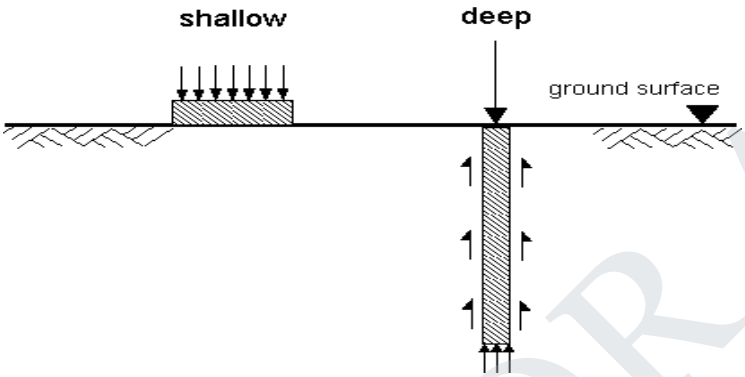

6. Why are bearing capacity equations for clay usually the undrained shear strength? (Apr/May 2015)

Bearing capacity equation is given by

Φ = 0, hence the bearing capacity equation becomes

Clay soil has low permeability and the water does not get drained during testing and the shear strength is hence undrained shear strength.

7. What is the influence of size on bearing capacity of a surface continuous footing resting on a purely cohesive soil as per BIS 6403? (Nov/Dec 2014)

When C=0, =C, where = 5.14

Continuous footing: =1.0

Surface footing: = 1.0

= 1.0 for vertical load

= 5.14 C (bearing capacity independent of size)

8. Say true or false and justify your answer: in Terzaghi's bearing capacity theory, as the shearing resistance above the base of the footing is ignored, the bearing capacity is independent of depth of footing? (Nov/Dec 2014)

False : Even though shearing resistance is ignored, the soil above the base of the footing is taken as a surcharge. (γ Df).

9. What is ultimate bearing capacity? (May/June 2014) (May/June 2013)

It is defined as the minimum gross pressure intensity at the base of the foundation at which the soil fails in shear.

10. What is net pressure intensity? (May/June 2014) (May/June 2013)

It is defined as the excess pressure or differences in intensities of the gross pressure after the construction of the structure and the original over burden pressure. If D is the depth of the footing,

11. What are the major criteria to be satisfied in the design of a foundation? (Nov/Dec 2013)

- Stability of structure
- It must not settle
- Must be safe from failure

12. What is the effect of rise of water table on the bearing capacity and the settlement of a footing on sand? (Nov/Dec 2013)

The presence of water affects the unit weight of soil. Hence bearing capacity is affected due to the effect of water table for which corrections are made in the Terzaghi's equation

13. Define differential settlement. How is it measured? (Nov /Dec 12)

Differential settlement is the difference of settlement between two adjacent columns or building due to imposed load, between the extreme ends of the foundation.

14. Define punching shear failure. (Nov/Dec 12)

It occurs where there is relatively high compression of soil under the footing, accompanied by shearing in the vertical direction around the edges of the footing. It may occur in relatively loose sand with relative density less than 35%.

15. What is meant by swelling potential? (Nov/Dec 12)

The potential to undergo detrimental volume changes corresponding to changes in moisture regime. Attributed to the presence of montmorillonite.

16. What is allowable bearing pressure? (May/June 2012)

Allowable bearing capacity is the ultimate bearing capacity divided by a factor of safety. Sometimes, on soft soil sites, large settlements may occur under loaded foundations without actual shear failure occurring; in such cases, the allowable bearing capacity is based on the maximum allowable settlement.

17. Give the expression for determining the safe bearing capacity based on N value for settlement of 25mm and 40mm? (May/June 2012)

The safe bearing capacity based on N value,

For 25mm, $qp = 34.3\ (N - 3)\ ((B + 0.3)/(2xB))^2\ Rw2\ .\ Rd$

For 40mm, $qp = 55\ (N - 3)\ ((B + 0.3)/(2xB))2\ Rw2\ .\ Rd$

18. Find as per Terzaghi's bearing capacity theory, the factor of safety of a continuous footing founded on the saturated clay against shear failure if its net safe bearing capacity is taken as the unconfined compressive strength of the clay. (Nov/Dec 2011)

$q_{net} = C\ Nc$

$= 5.7C$

$= 5.7 \times q/2 = 2.85q$

$q_{ns} = q_{nf}/F$

$F = q_{nf}/q_{ns}$ $(q_{ns} = q)$

$F = 2.85q/q = 2.85$

19. The load carrying capacity (against shear failure) of a surface square footing founded on sandy soil is 800 kN. If the size of the square footing is reduced by one half, what will be its load carrying capacity against shear failure? (Nov/Dec 2011)

$C = 0,\ D_f = 0$

$q_{nu} = ½\ B_\gamma\ N_\gamma\ S_\gamma = \text{Constant X B}$

$(q_{nu})_1 = \text{Constant X B}$

$(q_{nu})_2 = \text{Constant X B/2}$

$(q_{nu})_2 = (q_{nu})_1 /2$

$(Q_{nu})_1 = (q_{nu})_1 \times B^2 = 800$ kN (given)

$(Q_{nu})_2 = (q_{nu})_2 \text{ X } (B/2)^2 = (q_{nu})_1 /2 \text{ X } B^2/4 = (q_{nu})_1 B^2/ 8$

$(Q_{nu})_2 = 800/8 = 100kN$

20. Define safe bearing capacity. (Nov/Dec 2010)

It is the maximum intensity of loading that the soil will safely carry with a factor of safety without risk of shear failure of soil irrespective of any settlement that may occur.

21. What is the equation used to determine the immediate settlement? (Nov/Dec 2010)

$$S_i = \frac{Iq\,B(1-\mu^2)}{E}$$

Where

I = influence factor which depends on shape of footing and rigidity

q= intensity of contact pressure

B= least lateral dimension of footing

E & μ = young's modulus and Poisson's ratio

22. What are the criteria used for the determination of the bearing capacity? (Nov/ Dec 2010)

- Shear failure of the foundation or the bearing capacity failure
- The probable settlement differential as well as total of the foundation must b limited to safe, tolerable, or acceptable magnitudes.

PART B

1. Determine the ultimate bearing capacity of a strip footing, 1.5m wide, with its base at a depth of 1m, resting on a dry sand stratum. Take γ = 17 kN/m³, φ = 38°. For φ = 38°, N_q = 60 and N_γ = 75. (May/June 2016)

Solution:

$\varphi = 38^o > 36^o$, hence general failure will occur. The ultimate bearing capacity of a strip footing in general shear failure is given by

c = 0 (since soil is sand)

Therefore

2. The following data were obtained from a plate load test carried out on a 60cm square test plate at a depth of 2m below ground surface on a sandy soil which extends upto a large depth. Determine the settlement of a foundation 3.0 x 3.0 m carrying a load of 1100 kN and located at a depth of 2m below the ground surface. (May/June 2016) (Nov/Dec 2014)

Load Intensity	50	100	150	200	250	300	350	400
Settlement	2	4	7.5	11	16.3	23.5	34	45

Solution

Draw the load settlement curve

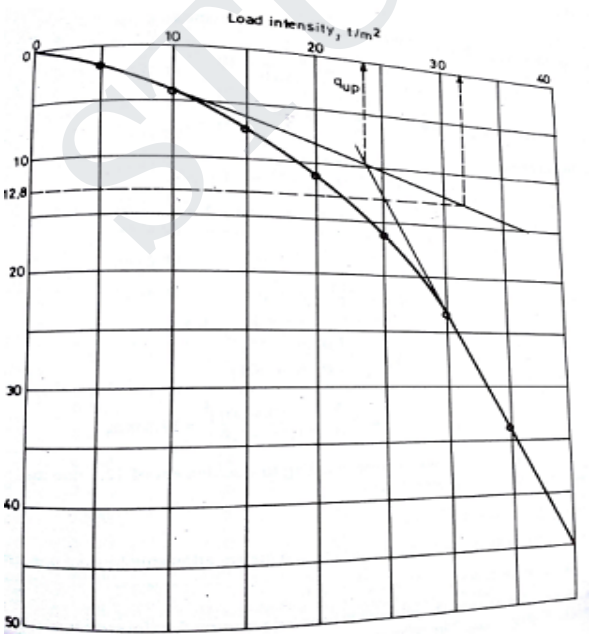

Load intensity on the foundation = 1100 / (3 X 3) = 122.2 kN/m²

From the fig. settlement of the test plate, S_p corresponding to a load intensity of 122.2kN/m^2 is 5mm.

Therefore from
== 9.3mm

3. A strip footing of 1.5m wide, resting on a sand stratum with its base at a depth of 1m. The properties of the sand are γ = 17 kN/m^3, γ_{sat} = 20 kN/m^3, φ = 38°, c' = 0. Determine the ultimate bearing capacity of the footing using Terzaghi's theory if the ground water table is located at a depth of 0.5m below the base of the footing. For φ = 38^{o,} assuming general shear failure N_q = 60 and N_γ = 75. (May/June 2016)

Solution

C = 0
Rw1 = 0.5(1+ Zw1/D)
Zw1 = 0.5, Rw1 = 0.75
Rw2 = 0.5
γ_{av} = (0.5X17 + 0.5X20)/1

= 2235 kN/m^2

4. Find the net allowable load on a square footing of 2.5x 2.5m. The depth of the foundation is 2m and the tolerable settlement is 40mm. The soil is sandy with SPT number of 12. Take a factor of safety of 3. The water table is very deep.
(May/June 16)

Solution
Using Teng's equation

Since WT is very deep

Substituting the values we get,

5. A strip footing 2m wide carries a load intensity of 560 kN/m^2 at a depth of 1.2m in sand. The saturated unit weight of sand is 18 kN/m^3 and the unit weight have a water table is 16.8 kN/m^3.

The shear strength parameters are C = 0 and φ = 35° determine the factor of safety with respect to shear failure for the following cases of location of water table.
(i) WT is 3m below GL
(ii) WT is at GL itself
(iii)WT is 4m below GL
(iv)WT is 0.4m below GL **(Nov/Dec 2015) (Nov/Dec 2012)**

Solution

C = 0,

Rw1 = 0.5(1+ Zw1/D), Zw1= depth of water table from GL
Rw2 = 0.5(1 + Zw2/B), Zw2 = depth of water table from base of footing

Note:

- When WT is very deep, depth of water table is greater than (D+B), Rw1 = Rw2 = 1
- When WT is between Ground level and D, Calculate Rw1, Put Rw2 = 0.5
- When WT is Between D and (D+ B), put Rw1 = 1 and Calculate Rw2

Case i : WT is 3m below GL

FOS = 2.7

Case ii : WT is at G.L itself

FOS = 2.27

Case iii : WT is 4m below GL

1

FOS = 2.76

Case iv : WT is 0.5m below GL

0.5

750. 92

FOS = 1.34

6. Explain in detail about IS code method for computing the bearing capacity of soil with various types of failure and shape factor. (Nov/Dec 2015)

General shear failure

BC eqn for strip footing

$q_{nf} = CN_c + qN_q + 1/2\gamma BN_\gamma$

Shape, depth and inclination factors

$q_{nf} = CN_cS_cd_ci_c + qN_qS_qd_qi_q + \gamma BN_\gamma S_\gamma d_\gamma i_\gamma w'$

Shape factors

	s_c	s_q	s_γ
Continuous strip	1	1	1
Square	1.3	1.2	0.8
Circle	1.3	1.2	0.6
Rectangle	(1+0.2B/L)	(1+0.2B/L)	(1-0.4B/L)

Depth factors

d_c=1+

$d_q = d_\gamma = 1$, for $\varphi=10°$

1 + , for $\varphi>10°$

$N_\varphi = \tan^2(45 + \varphi/2)$

Inclination factors

$i_c = i_q = (1 - \alpha/90)^2$

$i_\gamma = (1 - \alpha/\varphi)^2$

7. A circular concrete pier of 3m diameter carries a gross load of 3500kN. The supporting soil is a clayey sand having the following properties. C = 5 kN/m² , φ = 30° and γ = 18.5 kN/m³. Find the depth at which the pier is to be located such that a factor of safety of 3 is assumed. The bearing capacity factors for φ = 30° are N_c = 30.1 and N_q = 18.4 and N_γ = 22.4. (Apr/May 2015)

Solution

The gross safe bearing pressure is given as

495.2 = 313.86 + 107.3

=

Thus, the depth of the location of the pier = **1.44m**

8. A rectangular footing of size 1.5 m X 3 m rests on a clayey layer at depth of 1.5 m below ground level. The load acts at an angle of 5 to the vertical and eccentric in the direction of width by 100 mm. the unconfined compressive strength of the clay is 150 kPa. Determine the safe load the footing can carry without risk of shear failure. Adopt a factor of safety of 3. Use BIS 6403 recommendations. (Nov/Dec 2014)

Solution

= c

c = 150 / 2 = 75 kpa

= 5.14

B' = 1.5 – 2 X 0.1 = 1.3 m

= 1 + 0.2 X 1.3/3 = 1.087

= 1 + 0.2 X 1.5 / 1.3 tan (45 + 0) = 1.23

= = 0.892

= 75 x 5.14 x 1.087 x 1.23 x 0.892 = 459.74 k Pa

= 153.2d kPa

= 153.25 x 1.3 x 3 = 597.66 kN

9. A building undergoes settlement of 20 mm in 2 years and the ultimate settlement of the building is estimated to be 60 mm. Another building has a compressible layer underneath it, similar to the other building except that it is 25 underneath it, similar to the other building except that it is 25% thicker. Assuming that the average pressure increases in both the cases is alike, find the ultimate settlement of the second building. Also, compute settlement of this building in 2 years. (Nov/Dec 2014)

Solution

= = 60 mm

== 75 mm (ultimate settlement)

T = / = /

But = 1.25

= = 20/60 =1/3

=

= 1/3 x 1/1.25

(years) for the 2 case = 1/3 x 1/1.25 x 75 = 20

10. Explain the plate load test to determine the bearing capacity of soil.
(May/June 2014) (Nov/Dec 2013)

Plate Load Test is a field test for determining the **ultimate bearing capacity of soil** and the likely settlement under a given load. The **Plate Load Test** basically consists of loading a steel plate placed at the foundation level and recording the settlements corresponding to each load increment. The test load is gradually increased till the plate starts to sink at a rapid rate. The total value of load on the plate in such a stage divided by the area of the steel plate gives the value of the **ultimate bearing capacity of soil**.

Test Setup:

A test pit is dug at site up to the depth at which the foundation is proposed to be laid. The width of the pit should be at least 5 times the width of the test plate. At the centre of the pit a small square depression or hole is made whose size is equal to the size of the test plate and bottom level of which corresponds to the level of actual foundation.
The mild steel plate (also known as **bearing plate**) used in the test should not be less than 25 mm in thickness and its size may vary from 300 to *750* mm. The plate could be square or circular in shape. Circular plate is adopted in case of circular footing and square plate is used in all other types of footings. The plate is machined on side and edges.

2. Testing Procedure:

The test load is transmitted to the column by one of the following two methods
(i) By gravity loading or reaction loading method
(ii) By loading truss method.

(i) Gravity loading or reaction loading method:

In case of gravity loading method, a loading platform is constructed over the column placed on the test plate and test load is applied by placing dead weight in the form of sand bags, pig iron, concrete blocks, lead bars etc. on the platform. Many a times a hydraulic jack is placed between the loading platform and the column top for applying the load to the test plate – the reaction of the hydraulic jack being borne by the loaded platform. This form of loading is termed as reaction loading.

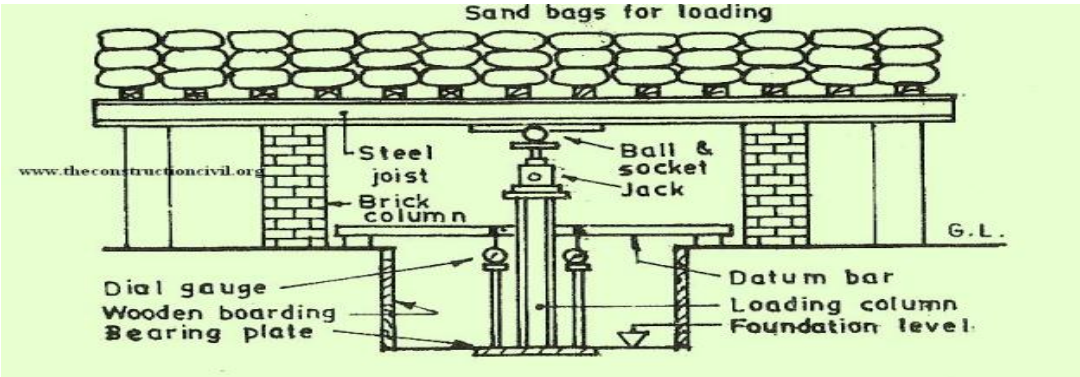

ii) Reaction Truss Method:

In case of reaction truss method, instead of constructing a loading platform, a steel truss of suitable size is provided to bear the reaction of the hydraulic jack. The truss is firmly anchored to the ground by means of steel anchors and guy ropes are provided for ensuring its lateral stability. When the load is applied to the test plate, it starts sinking slowly. The settlement of the plate is recorded to an accuracy of 0.02 mm with the help of sensitive dial gauges. The load is applied in regular increment of about 2KN or 1/5th of the expected **ultimate bearing capacity**, whichever is less. Settlement should be observed for each increment of load after an interval of 1, 4, 10, 20,
40 and 60 minutes and thereafter at hourly intervals until the rate of settlement becomes less than 0.02 mm per hour. The maximum load to be applied for the test should be about 15 times the expected ultimate bearing capacity of the soil.

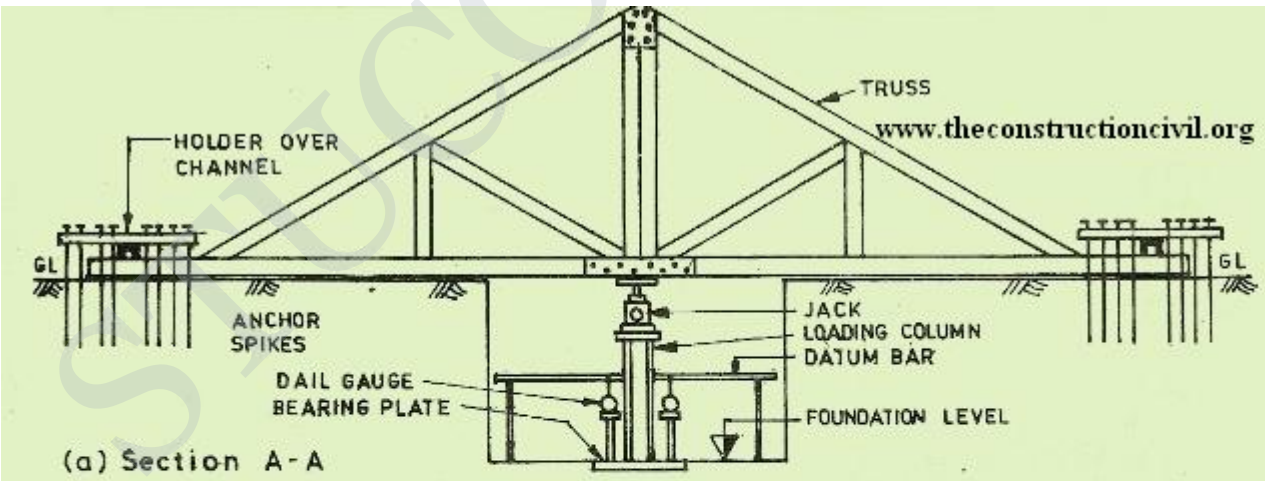

3. Interpretation of Results:

The load intensity and settlement observations of the plate load test are plotted in the form of load settlement curves.

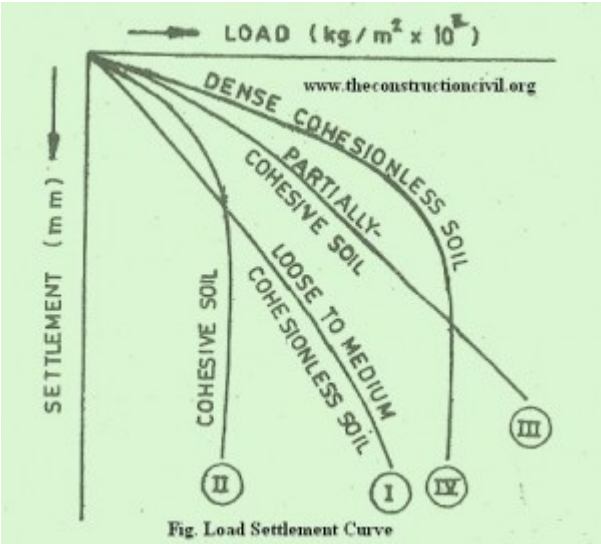

Fig. Load Settlement Curve

The settlement of footing is also related to the SBC of the soil. The value of ultimate bearing capacity and hence the SBC in this case, can be obtained from the load settlement curves by reading the value of load intensity corresponding to the desired settlement of test plate. The value of permissible settlement *(Sf)* for different types of footings (isolated or raft) for different types structures are specified in the I.S. code. The corresponding settlement of test plate (S*p*) can be calculated from the following formula,

S*f* = S*p* {[B (B*p* + 0.3)]/[B*p* (B + 0.3)]}^2

Where,
B = width of footing in mm.
B*p* = width of test plate in mm.
S*p* = settlement of test plate in mm.
S*f* = settlement of footing in mm.

11. Determine the depth at which a circular footing of 3m diameter be found to provide FOS of 3, if it has to carry a safe load of 1500kN. The foundation soil has C = 10 kN/m², γ = 18 kN/m³ . Use Terzaghi's analysis. (May /June 2014) (May/June 2013)

Given
$\Phi = 0$
$N_c = 5.7$, $N_q = 1$, $N_\gamma = 0$
$C = 10$ kN/m², $\gamma = 18$ kN/m³

Solution
Ultimate bearing capacity:

B= diameter

= 74.1 + 48 D

Net Ultimate bearing capacity

= (74.1 + 48 D) – (18 x D)
= 74.1 kN/m²

Safe bearing capacity

= 24.7 + 18D
P =
1600 = (24.7 +18D) x (π x 3²) / 4
D = 11.20m

12. A footing of 3m square is founded at the depth of 2m in a sand deposit, for which the correct value of N is 30. The water table is at a depth of 3m from the surface. Determine the net allowable bearing pressure using Teng's equation, if the permissible settlement is 40mm and FOS of 2 is desired against shear failure. (Nov/Dec 2013)

Given Data:
N = 30, D_f = 2m, B =3m, FOS = 2

Solution

=

KN/m2

=649.31 KN/m²

1038.9 KN/m²

Net Safe Bearing Capacity q_{na}= 346.3 KN/m²

13. A raft foundation 10.5m wide and 12.3m long is to be constructed in a clayey soil having shear strength of 11.4 KN/sq. m. Unit weight of soil in γ= 15 kN/cu.m. If the ground surface carries a surcharge of 19.5 KN/sq.m. Calculate the maximum depth of foundation to ensure a FOS of 1.2 against base failure. N_c for clay is 5.7. (May/June 2013)

Solution:

Bearing capacity of soil for rectangular footing in cohesive soil is given by,

+15 D + 19.5 = 101.12 + 15D

Base failure will occur when q_f is equal to zero.

D = 6.74m

Safe depth = 6.74/1.2 = **5.61m**

14.Compute the ultimate load that an eccentrically loaded square footing of width 2 m with an eccentricity of 0.315 m can take at a depth of 0.45 m in soil with γ=17.75 kN/m³, C=9 kN/m² and φ=35°, N_c=52, N_q=35 and N_r=42. (Nov/Dec 2012)

Solution

$q_f = 1.3CN_c + \gamma DN_q + 0.4\gamma b' N_\gamma$

b' = b-2e =2-2x0.315=1.37m

Effective area= b x b'=2x1.37=2.74m²

q_f= 1.3x9x52+17.75x0.45x35+0.4x17.75x1.37x42 = 1296.50 kN/m²

Q_{ult} = q_f x eff area = 1296.50x2.74 = 3552.40 kN

15. A square footing for a column is 2.5mx2.5m and carries a load of 2000KN. Find the factor of safety against bearing capacity failure, if the soil has the following properties, C = 50KN/m . γ = 17.6KN/m³. Angle of internal friction = 15. N'_c= 12.5, N'_q = 4.5, $N'\gamma$ = 2.5. The foundation is taken to a depth of 1.5m. (May / June 2012)

$q_{nf} = (2/3) \times 1.3\, CN'_c + q\,(N'_q - 1) + 0.4\,\gamma\, BN'_\gamma$

= (2/3) x 1.3 x 50 x 12.5 + (17.6 x 1.5) (4.5 – 1) + (0.4 x 17.6 x 2.5 x 2.5)

= 678.07KN/m².

$P_s = q_s \times A$

2000 = q_s x (2.5 x 2.5)

q_s = 320 kN/m².

$q_s = (q_{nf}/F) + \gamma D$

320 – (17.6 x 1.5) = (q_{nf}/ F)

F = (q_{nf} / 293.6) = 2.31

16. Determine the probable settlement of a strip footing 1m wide transmitting a pressure intensity of 100KN/m² at a depth of 1.5m below sand ; if a plate load test shows a settlement of 5mm against 100KN/m². The size of the plate used is 30cm x 30cm. (May/June 2012)

$\rho_p = \rho_f ((B_p (B_f + 0.3)) / (B_f (B_p + 0.3)))$
$5 = \rho_f ((0.3 (1+0.3)) / (1 (0.3 + 0.3)))$

Solving , $\rho_f = 7.69$ mm.

ii) What are the causes of settlement and differential settlement? (May / June 2012)

Weak Bearing Soils

Some soils are simply not capable of supporting the weight or bearing pressure exerted by a building's foundation. As a result, the footings press or sink into the soft soils, similar in theory to how a person standing in the mud sinks into soft, wet clay.

In such cases, footings may be designed to spread the load over the weak soils, thereby reducing potential foundation settlement. However, the majority of settlement problems caused by weak bearing soils occur in residential construction, where the footings are designed based upon general guidelines and not site-specific soil information.

Poor Compaction

Placement of fill soils is common practice in the development of both commercial and residential subdivisions.

In general, before a foundation can be constructed on a plot, hilltops are cut down and valleys are filled in order to create buildable lots. Properly placed and compacted fill soils can provide adequate support for foundations, and are sometimes brought in from off-site locations.

When fill soils are not adequately compacted, they can compress under a foundation load resulting in settlement of the structure. Construction equipment excavating soils during a foundation construction

Changes in Moisture Content

Extreme changes in moisture content within foundation soils can result in damaging settlement. Excess moisture can saturate foundation soils, which often leads to softening or weakening of clays and silts. The reduced ability of the soil to support the load results in foundation settlement. Increased moisture within foundation soils is often a consequence of poor surface drainage around the structure, leaks in water lines or plumbing, or a raised groundwater table.

Soils with high clay contents also have a tendency to shrink with loss of moisture. As clay soils dry out, they shrink or contract, resulting in a general decrease in soil volume.

Therefore, settlement damage is often observed in a structure supported on dried-out soil. Drying of foundation soils is commonly caused by extensive drought-like conditions, maturing trees and vegetation (see next section), and leaking subfloor heating, ventilation, and air conditioning (HVAC) systems.

Maturing Trees and Vegetation

Maturing trees, bushes and other vegetation in close proximity to a home or building are a common cause of settlement. As trees and other vegetation mature, their demand for water also grows.

The root systems continually expand and can draw moisture from the soil beneath the foundation. Again, clay-rich soils shrink as they lose moisture, resulting in settlement of overlying structures. Many home and building owners often state that they did not have a settlement problem until decades after the structure was built. This time frame coincides with the maturation and growth of the trees and vegetation.

Soil Consolidation

Consolidation occurs when the weight of a structure or newly-placed fill soils compress lower, weak clayey soils. The applied load forces water out of the clay soils, allowing the individual soil particles to become more densely spaced. Consolidation results in downward movement or settlement of overlying structures. Settlement caused by consolidation of foundation soils may take weeks, months, or years to be considered "complete."

17. A footing 2m x 2m is placed at a depth of 1.5m in a uniform sand deposit. Borings indicated that the average corrected N-value above and below the base of the footing is same and equal to 25. The ground water table is at 1.5m from the surface. Determine the allowable bearing pressure so that the factor of safety against shear failure is not less than 3 and settlement is not more than 40mm. (Nov/Dec 2011)

q_{sett} = 55 (25 – 3) [(2+0.3)/ (2 x 2)]^2 x 0.5 x 1.75
= 350.049 kN/m^2

q_{all} = 116.68 kN/m^2

SBC = 20.14 t/m^2

(ii) **Discuss the limitations of plate load test. (NOV/DEC 2011)**

1. Scale Effect / Size effect

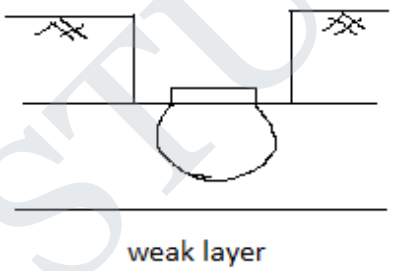

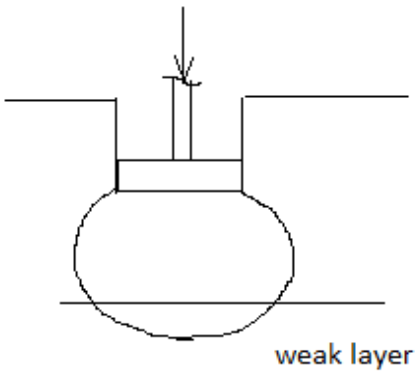

2. The settlement measured is only for 24 h. Next load increment is applied before consolidation is over.

3. If the water table is very close or above the proposed foundation level, very difficult to conduct the test.

18. Plate load test were conducted in a c-Ø soil, on a plate of two different sizes & the following results were obtained:

Load	size of the plate	settlement

50kN	**0.3m x 0.3 m**	**25mm**
110kN	**0.6m x 0.6 m**	**25mm**

Find the size of the square footing required to carry a load of 1000kN. (May/June 2010)

For c-φ soil,

Q = A. q +P .s

50= (0.3 x 0.3) .q + (4 x 0.3) s …….(1)

110 = (0.6 x 0.6) q + (4x 0.6) s ……(2)

Solving (1) and (2), q= 55.5 kN/m^2 and s= 37.5 kN/m^2

And 1000 = (B x B) x 55.5 + 4B x 37.5

Solving, B= 3.1m

UNIT III

FOOTINGS AND RAFTS

PART A

1. When is strap footing preferred? (May /June 2016) (May/June 2010)

The strap footing is provided when:

(i) The distance between the columns is so great that the trapezoidal combined footing becomes quite narrow.

(ii) To connect an eccentrically loaded column footing close to property line to an interior column footing.

2. Draw the contact pressure distribution diagram below rigid footing resting on clay and sand. (May /June 2016) (Nov/Dec 2013) (May/June 2012)

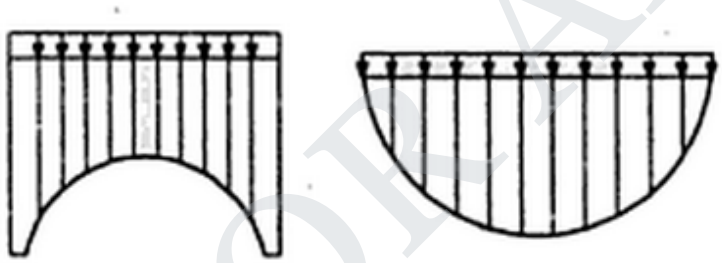

(a) Real Elastic Material (Saturated Clay) (b) Cohesion less Sand

3. List the types of footing. (Nov/Dec 2015) (Nov/Dec 2010)

- Isolated footing
  - Spread footing
  - Stepped footing
- Strip/continuous footing
- Combined footing
  - Rectangular footing
  - Trapezoidal footing
  - Strap footing
- Raft footing

4. State the expression for the total settlement of a footing.

(Nov /Dec 2015) (May/June 2014) (May/June 2013)

The total settlement of a footing consists of three components:

Total settlement = immediate elastic settlement + consolidation settlement + settlement due to secondary consolidation.

5. Indicate the circumstances under which combined footings are adopted. (Apr/May 2015)

In some cases, a column is to be provided near the edge of property and it may not be permissible to extend the footing beyond a certain limit. In such a case, the load on the footing will be eccentric and hence this will result in uneven distribution of load to the supporting soil.

Combined footings under two or more columns are used under closely spaced, heavily loaded interior columns where individual footings, if they were provided, would be either very close to each other, or overlap each other. This footing is called "combined footing".

6. List and sketch different types of mat foundation. (Apr/May 2015) (Nov/Dec 2013)

- Flat plate mat
- Plate thickened under columns
- Two-way beam and slab
- Plate with pedestal
- Rigid frame mat
- Piled raft

Mat (Raft) Foundations types

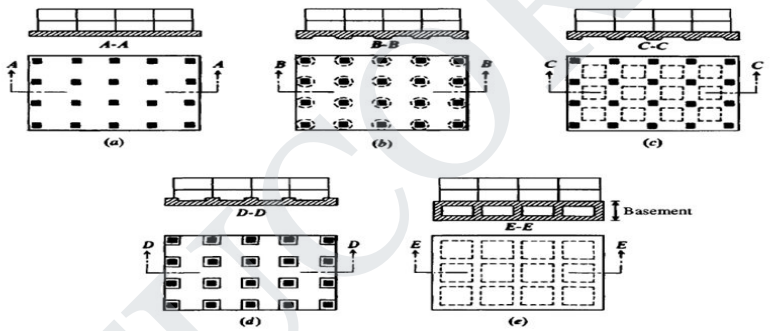

Figure 10-1 Common types of mat foundations. (*a*) Flat plate; (*b*) plate thickened under columns; (*c*) waffle-slab; (*d*) plate with pedestals; (*e*) basement walls as part of mat.

7. Plate load test is not applicable for heterogeneous soil. Why? (Nov/Dec 2014)

1. Scale Effect / Size effect

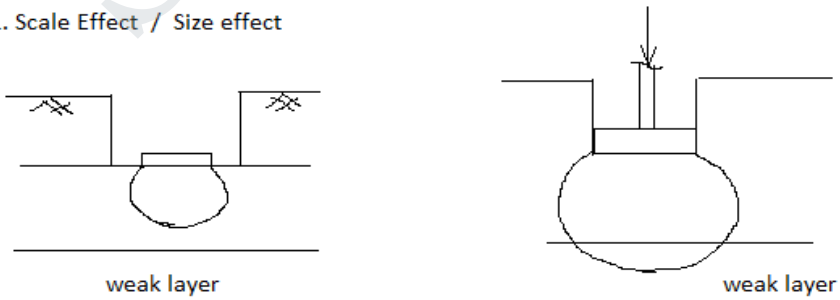

Therefore the calculated bearing capacity is either over estimated or under estimated.

8. What is meant by partially floating foundation? (Nov/Dec 2014)

To execute a floating foundation, excavation is to be carried out till a depth D is reached where the weight of the excavated soil equals to the weight of the structure. In this case, the excess superimposed load at the foundation level is equal to zero and the foundation suffers no settlement.

If the full weight of the building = Q

Weight of the soil excavated = Ws

Excess load at foundation level = Q_e

In case of floating foundation Q = Ws

In case of partially floating foundation, Qe has a certain value which when divided by foundation area gives the allowable bearing capacity of the soil. Qe / A = q_a

9. What is spread footing? (May/June 2014)

Spread footing is a foundation that transmits the load to the ground through one or more stepped footings.

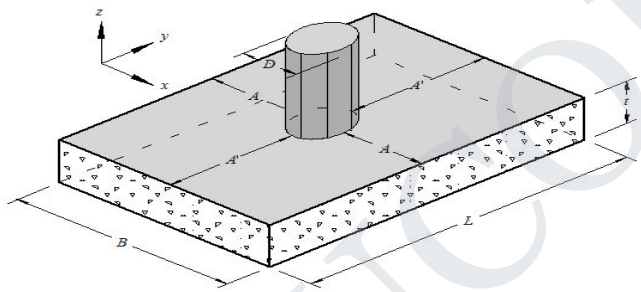

10. What is safe bearing pressure? (May/June 2013)

It is the intensity of loading that will cause a permissible settlement or specified settlement for the structure

11. State the prime objective of using floating foundation. (Nov/Dec 2012)

If the estimated differential settlement under the raft is more than the tolerable or the weight of the building divided by its area gives a bearing stress greater than the allowable bearing capacity, floating foundation is provided.

Since the self-weight of the structure is equal to the weight of soil excavated, there is little chance for settlement to occur when a floating foundation is provided.

12. List the soil and loading conditions that favour the use of trapezoidal footing. (Nov/Dec 2012)

When the two column loads are unequal, with the outer column carrying heavier load, and when there is limited space limitation beyond the outer column, a trapezoidal combined footing is provided.

13. In which situation are raft foundations used? (Nov/Dec 2012)

- When allowable soil pressure is low.
- When columns or walls are so close to each other that individual footings would overlap each other or nearly touch each other.
- For reducing differential settlement in non-homogenous soil.
- When there is large variation in the loads on individual columns.

14. What is proportioning of footing? (May /June 2012)

A footing is so proportioned that the centroid of the area in contact with the soil lies on the line of action of the resultant of the loads applied to the footing; consequently the distribution of soil pressure is reasonably uniform. In addition, the dimensions of the footing are chosen such that the allowable soil pressure is not exceeded. When these criteria are satisfied, the footing should neither settle nor rotate excessively.

15. Say true or false and justify your answer: The bearing pressure corresponding to settlement consideration for a raft foundation is more than that of an isolated footing, though both are classified as shallow foundation. (Nov/Dec 2011)

True
Raft foundation – Uniform Settlement

For the given permissible settlement, more pressure can be permitted.

16. Two columns C1 and C2 carry loads of 600 kN and 900 kN respectively. C2 is on the boundary line. The spacing between the columns is small. Can you adopt rectangular combined footing for this case? If not, suggest an alternative. Justify your answer. (Nov/Dec 2011)

Centroid will be close to 900kN.
To coincide the geometrical centroid of footing with load centroid, the rectangular footing has to be extended beyond 900 kN column, which is not possible
Hence Trapezoidal combined footing.

17. State the situations under which mat foundation is adopted?

(a) When SBC is so low that the total foundation area is > 50% of plinth area

(b) When differential settlement is to be completely eliminated.

18. What are the design methods available for the mat foundation? (NOV/DEC 2010)

By conventional rigid method
By elastic plate method

19. **What is floating raft foundation? (Nov/ Dec 2010)**

To execute a floating foundation, excavation is to be carried out till a depth D is reached where the weight of the excavated soil equals to the weight of the structure. In this case, the excess superimposed load at the foundation level is equal to zero and the foundation suffers no settlement.

- It is used where deep deposits of compressible cohesive soil exists and the use of piles is impractical.
- It is constructed in such a way that the substructure can be assembled as a combination of a raft and caisson

20. What is the function of a strap beam in strap footing? (Nov/ Dec 2010)

It is used to connect the spread footings of two columns, it does not remain in contact with the soil and thus not transfer any pressure to the soil.

PART B

1. A trapezoidal footing is to be provided to support two square columns of 30cm and 50cm sides respectively. Columns are 6m apart and the safe bearing capacity of the soil is 400kN/m². The bigger column carries 5000kN and the smaller 3000kN. Design a suitable size of the footing so that it does not extend beyond the faces of the columns. (May/June 16)

Solution

Area

Therefore a + b = ----------(1)

Also,

But, using a and b instead of b1 and b2

Therefore,

Or
0.831a – 0.169b = 0
Or
b = 4.917a

Substituting these values in ----(1)

We get

b = 4.889m

Hence use trapezoidal footing size as **a = 1m, b = 4.9m and L = 6.4m**

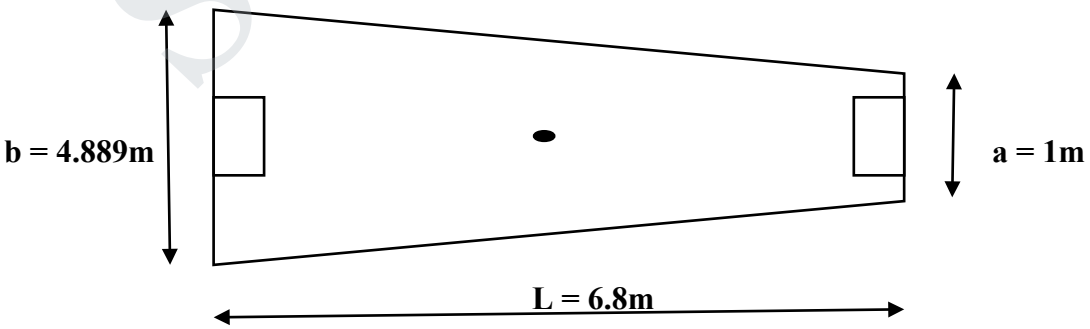

2. Explain the conventional method of proportioning of raft foundation. (May/June 2016) (May/June 2014)

1. The soil pressure is assumed to be plane such that the centroid of the soil pressure coincides with the line of action of the resultant force of all the loads acting on the foundation.

2. The foundation is infinitely rigid and therefore, the actual deflection of the raft does not influence the pressure distribution below the raft.

In this method, allowable bearing pressure can be calculated by the following formulae:

$$q_1 = 21.4N^2BR_{w_1} + 64(100 + N^2)DR_{w_2}$$

$$q_2 = 1950(N - 3)R_{w_2}$$

Where q_1 and q_2 = allowable soil pressure under raft foundation in kg/m^2 (use a factor of safety of three). The smaller values of q_1 and q_2 should be used for design.

R_{w_1} and R_{w_2} = reduction factor on account of subsoil water.

N = penetration resistance.

If the values of N is greater than 15 in saturated silts, the equivalent penetration resistance should be taken for the design. The equivalent penetration resistance can be determined by the formula:

$$N_e = 15 + \frac{1}{2}(N - 15)$$

The pressure distribution (q) under the raft should be calculated by the following formula:

$$q = \frac{Q}{A} \pm Q\frac{e_y'}{I'_y}y \pm Q\frac{e_x'}{I'_x}x$$

Where Q = total vertical load on raft

x, y = co-ordinates of any given point on the raft with respect to the x and y axes passing through the centroid of the area of the raft.

A = total area of the raft.

e_x', e_y' = eccentricities about the principal axis passing through the centroid of the section.

I'_x, I'_y = moment of inertia about the principal axis through the centroid of the section.

e_x', e_y', I'_x, I'_y can be calculated by the following equations:

$$e_x' = e_x \frac{I_{xy}}{I_x} e_y$$

$$e_y' = e_y \frac{I_{xy}}{I_y} e_x$$

$$I_y' = I_y - \frac{I^2_{xy}}{I_x}$$

Where e_x and e_y = eccentricities in x and y direction of the load from the centroid.

I_x and I_y = moment of inertia of the area of the raft respectively about the x and y axes through the centroid.

$I_{xy} = \int xydA$ for the whole area about x and y axes through the centroid.

3. Proportion a rectangular footing for two columns 5m apart. The exterior column of size 0.3 x 0.3 m carries a load of 600kN and interior column of size 0.4 x 0.4m carries a load of 900kN. The allowable soil pressure is 100 kN/m². (May/June 2016)

Solution:

Total load = 600 + 900 = 1500 kN

A = (1500+ 150)/100 = 16.5m²

We know B = A/L = 16.5/6.3 = 2.62 say 2.65 m

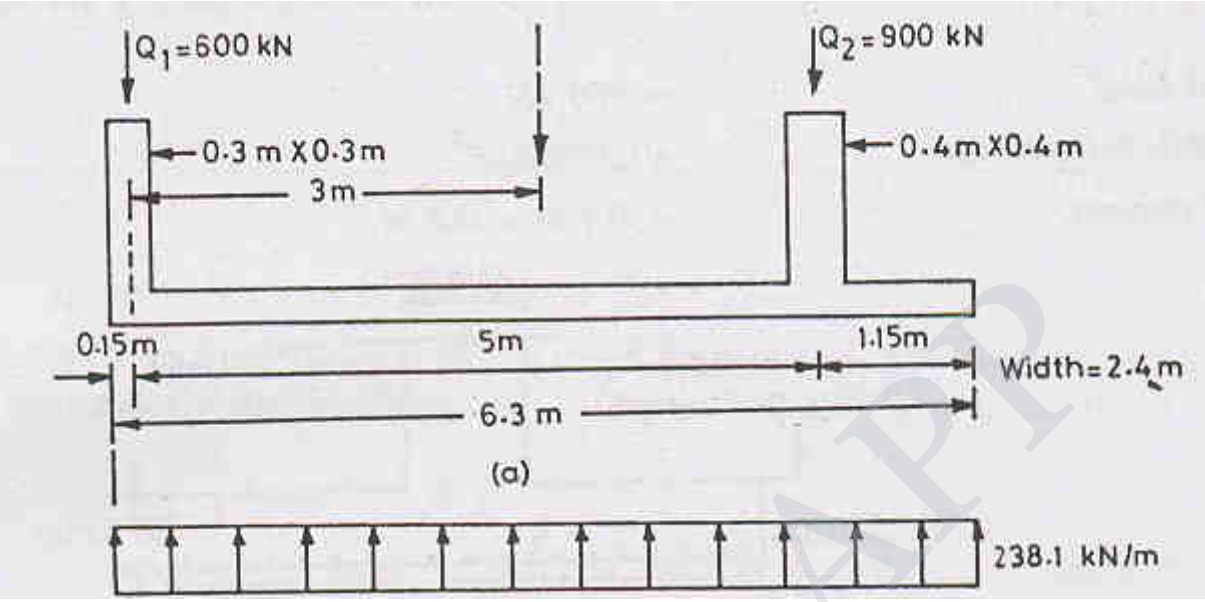

4. Discuss in detail about the design procedure for rectangular and trapezoidal combined footing with sketch. (Nov/Dec 2015) (May/June 2014) (Nov/Dec 2013)

Rectangular combined footing:

1. Determine the total column loads which are to be positioned in the footing and determine the line of action of the resultant.
2. Obtain the soil pressure distribution (stress/unit length of the footing)
3. Find the width B of the footing
4. Draw the shear force diagram and BM diagrams

- A=
- X=
- L/2 = X +b/2 +a
- B= Area/L

Trapezoidal combined footing:

- Determine the total column load $Q-Q_1 = Q_1$
- Find base area of footing
- Locate line of action of resultant of the column loads

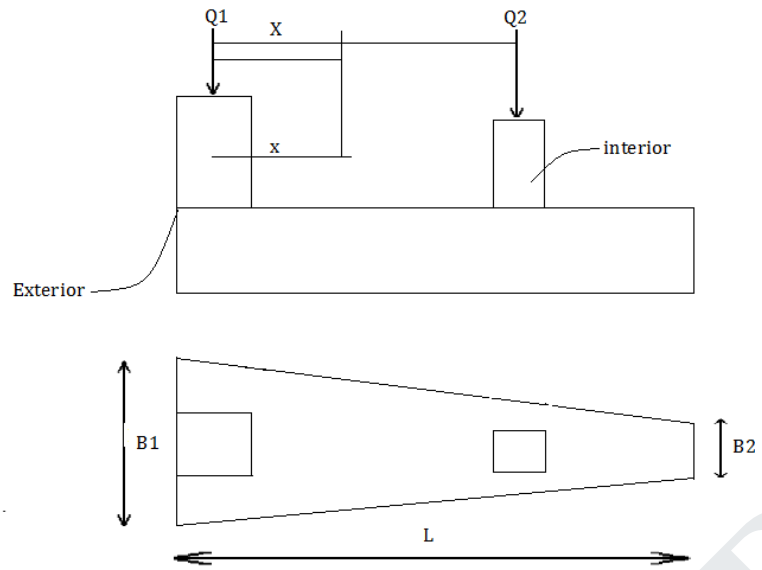

- Determine the distance x of the resultant from the outer face of the exterior column

- A trapezoidal footing is required if

  L=Length of the trapezoidal footing
- If X-x= a rectangular footing is provided
- However if X'<a combined footing cannot be provided
- In such a case a strap footing is suitable
- Determine the widths B_1 and B_2 from the following relations ;
- Solving these equations, ;
- Once the dimensions B_1 and B_2 have been found the rest of the design can be done as in the case of a rectangular combined footing.

5. Write notes on: **(Nov/Dec 2015)**

(a) Mat foundation

A mat is a thick reinforced concrete slab which supports all the load bearing walls and column loads of the structure

- A mat is required :
- When allowable soil pressure is low
- When columns or walls are so close to each other that individual footings would overlap each other or nearly touch each other
- For reducing differential settlement in non-homogenous soil

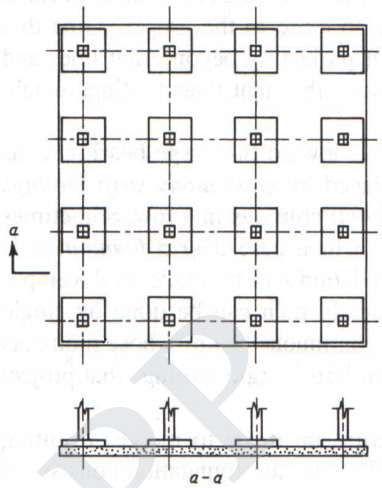

- When there is large variation in the loads on individual columns

The types of mat foundation commonly employed are

- Flat plate mat

- Plate thickened under columns
- Two-way beam and slab
- Plate with pedestal
- Rigid frame mat
- Piled raft

(b) Floating foundation **(Apr/May 2015)**

- Special type of foundation useful in locations where deep deposits of compressible cohesive soils exist and the use of piles is impractical
- Concept is that the substructure is assembled as a combinations of raft and caisson to create a rigid box
- Total weight of soil excavated for the rigid box is equal to to total weight of planned structure

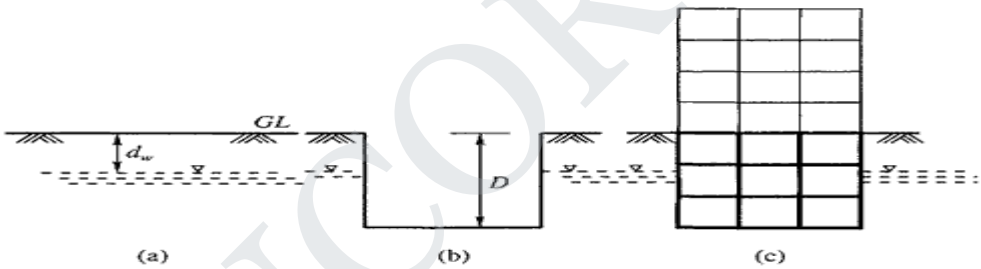

Balance of stresses in foundation excavation

(c) Seismic consideration in footing design.

The design external forces on a foundation during an earthquake are

1. The horizontal force P_h determined as the horizontal shear force of the floor directly above the foundation, and

2. The vertical force P_v consisting of the vertical force associated with the overturning moment added to or subtracted from the vertical force for a long period

6. Draw the contact pressure distribution below flexible and rigid footing resting on sandy deposits. Also draw the settlement pattern. (Apr/May 2015) (Nov/Dec 2014) (Nov/Dec 2011)

FLEXIBLE FOOTING RIGID FOOTING

CLAY CLAY

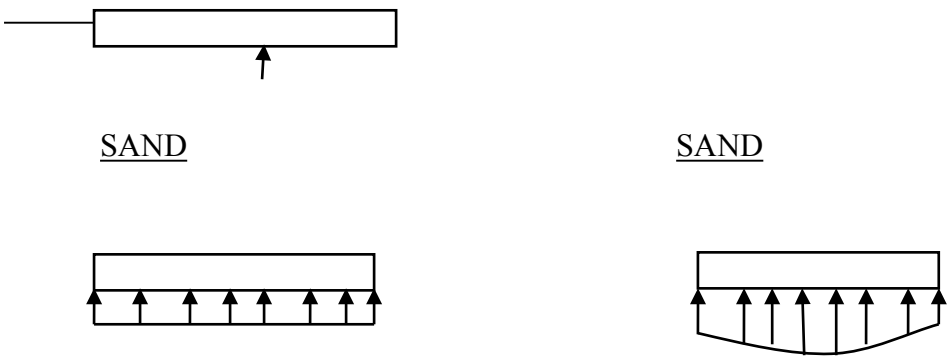

7.Column loads on column A and B are 2000 kN and 1500 kN respectively. Column B is a boundary column. Proportion a trapezoidal footing. The allowable soil pressure is 200 kPa. (Apr/may 2015)

Solution:

A = (3500+350) / 200 = 19.25 m^2 L = 6.5m

L/2 = 6.5/2 = 3.25m, L/3 = 2.17m

As $L/3 < x' < L/2$, a trapezoidal footing is required.

$$B_2 = \frac{2A}{L}\left(\frac{3x'}{L} - 1\right)$$

$$= \frac{2 \times 17.5}{6.5}\left(\frac{3 \times 2.82}{6.5} - 1\right) = 1.62 \text{ m}$$

$$B_1 = \frac{2A}{L} - B_2$$

$$= \frac{2 \times 17.5}{6.5} - 1.62 = 3.76 \text{ m}$$

Let us provide $B_1 = 3.80$ m and $B_2 = 1.65$

$$q_0 = \frac{3500}{1/2\,(3.8 + 1.65) \times 6.5} = 197.6 \text{ kN/m}^2$$

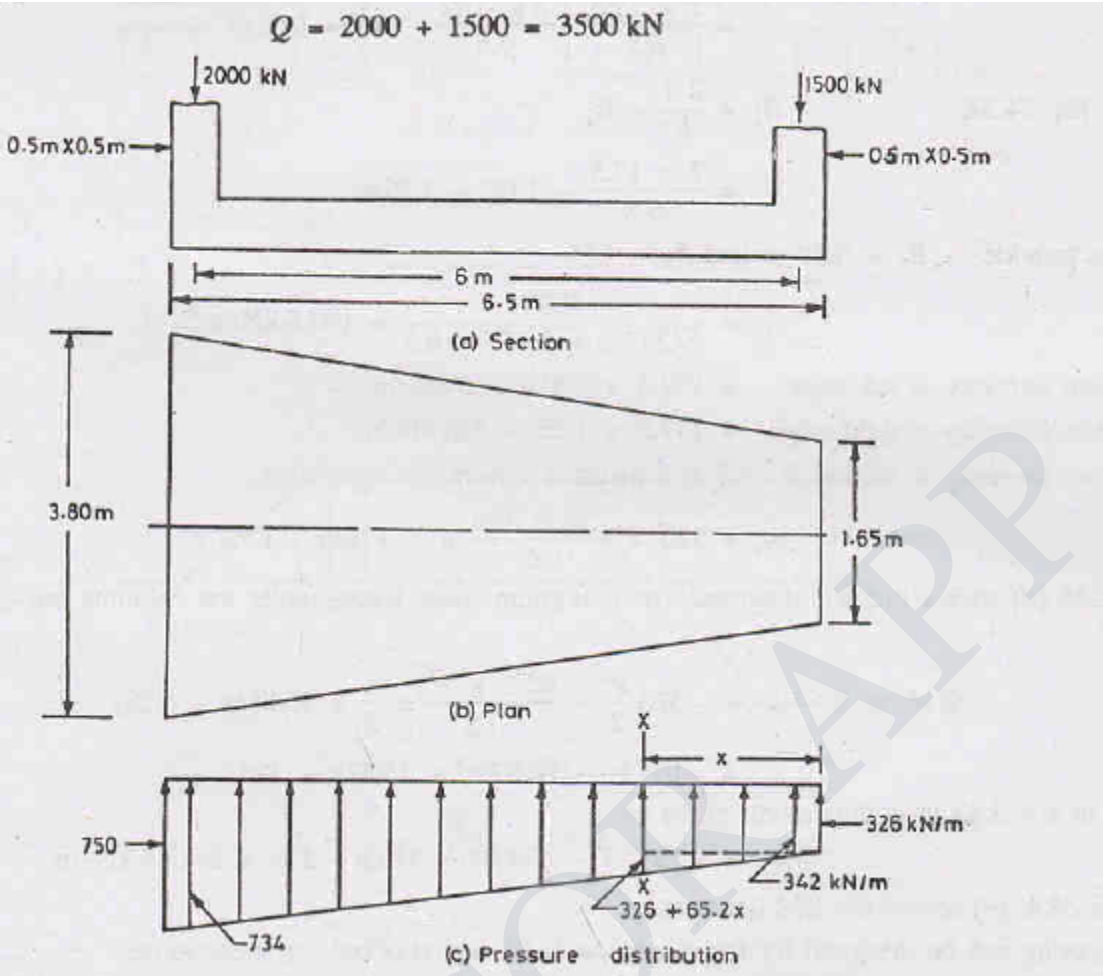

8. It is decided to provide a strap footing for two columns A and B as detailed below:
Column loads : Load on A = 1500 kN
Load on B = 1450 kN
Size of the column = 0.5m
C/C distance = 5.8m
Allowable soil pressure = 370 kN/m² **(Apr/May 2015)**

Solution

$L_1 = 2\ (e + 0.5b_1) = 2(\ 1 + 0.5x\ 0.50) = 2.5m$

1682 kN

$= (\ 1450 + 1500) – 1682 = 1268$ kN

$A_1 = \ = m^2$

$A_2 = \ = m^2$

Provide width of footing as 2m

B_1 = 4.54 / 2 = 2.27m

B_2 =

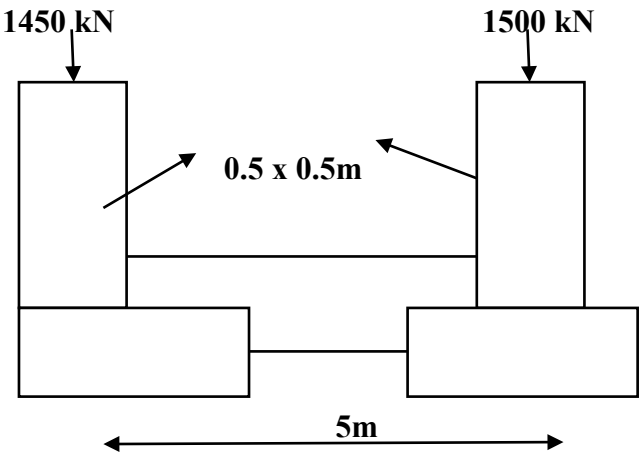

9. Proportion a strap footing to carry loads of 750 kN and 400 kN through columns of sizes 400mm x 400mm and 250mm x 250mm respectively. The columns are spaced at 5m c/c and the second is on the boundary line. The width of the footing could be assumed as 2.2m. The allowable bearing capacity of the soil is 250kPa. (Apr/May 2015) (Nov/Dec 2014)

Solution

$L_1 = 2\ (e + 0.5b_1) = 2(\ 1 + 0.5x\ 0.25) = 2.25m$

500 kN

= (750 + 400) – 500 = 650 kN

A_1 = = m^2

A_2 = = m^2

B_1 = 2.0 / 2.2 = 0.8

B_2 =

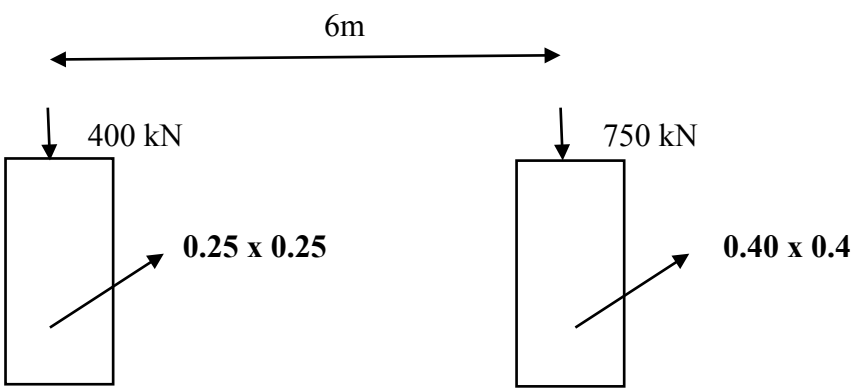

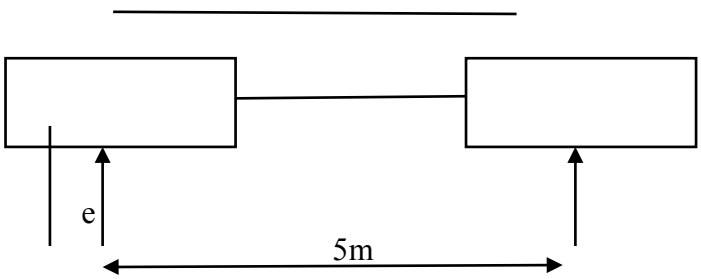

10. A combined footing is to support two columns 250X250mm and 300X300mm carrying loads of 300kN and 450 kN respectively. The columns are spaced at 4m c/c. The allowable bearing capacity of the soil is 150kPa. Find the plan dimensions of the footing if
(a) The first column is alone on the boundary line
(b) Both the columns are on boundary line. (Nov/Dec 2014) (Nov/Dec 2011)(May/June 10)

Solution

X = 300 x 0 + 450 x 4 / 750

Area = (300 + 450) x 1.1 / 150 = 5.5 m^2

<u>I case:</u> <u>Rectangular Combined footing:</u>

l = 2 (2.4 + 0.25 / 2) = 5.05 m

b = 5.5 / 5.05 = 1.09 m

<u>II case: Trapezoidal Combined footing:</u>

(Solve step by step referring to previous problems on trapezoidal combined footing)

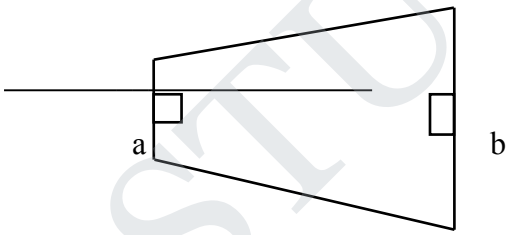

4 + 0.25/2 + 0.3/2

(a+b) / 2 x 4. 275 = 5.5

a + b = 2. 57

[(a + 2b) / a + b] x 4.275 / 3 = 2.4 + 0.125

Solving a = 0.58 m b = 1.99 m

11. Design a rectangular combined footing for two columns 6m(c/c) apart. The exterior column size is 0.5 * 0.5m and it carries a1500KN load. The interior column of size 0.3 * 0.3m and it carries a load of 1000KN. The projection of footing beyond left column is 0.7m from centre and 1.8m beyond right side column centre take allowable soil pressure as 200KN/m². (Nov-Dec 2013)

Given Data:

$b_1 = 0.5$

$b_2 = 0.3$

$P_1 = 1500KN$

$P_2 = 1000KN$

$q_a = 200KN/m^2$

Total Load = Q = 2500KN

Factored Load = 3750KN

Centre of gravity = $Qx' = Q_1(y_c)$ Solving $x' = 3.6m$

Area of footing

$q_a * A$= Factored Load, Solving $A = 18.75m^2$

Length of footing, L = 8.5m

Breadth of footing, B = 2.2m

12. Explain the pile load test to determine the load carrying capacity of a pile. (unit 4) (May/June 13)

The pile load test is the most reliable method of determining the capacity of a pile. A test pile is installed adopting the same proposed procedure. It may be loaded to near failure condition or upto the working load level. In the latter case, the pile shall form one of the permanent piles of the foundation. A careful record has to be maintained during installation and during the load test.
Three types of tests are conducted namely vertical load test, lateral load test and pull out test. The vertical test consists of applying a static load on the pile top in convenient load increments and recording the vertical deflections of the pile. Suitable reaction device is adopted. The reaction may be obtained from (i) kentledge placed on a platform supported clear of the test pile with the cetre of gravity of the kentledge passing through the axis of the pile or (ii) anchor piles installed at a distance not less than threee times the test pile shaft diamter or 1.5m, whichever is greater. The reaction for the test should be 25% more than the proposed final test load. Measurement of pile movements is related to a fixed reference mark. Reference mark would be supported on objects located outside the soil zone.
The pile head is made level. A bearing plate is placed before the jack. Datum bar is set on immovable supports. Two dial gauges are fixed on the datum bar. A series of vertical downward increment of load with intensity of 20% of the safe load on the plate are applied. Settlement readings are taken.

Test is continued till the maximum load is 1.5times the working load or maximum settlement of the test not exceeding 12mm.

Pile load settlement curve is drawn and the safe load is obtained as the least of the following

1. The straight portions of the curves are extended and the ultimate load is found. A factor of safety is adopted and the safe load against shear failure is determined.
2. Two-thirds of the final load at which the load settlement attains a value of 12mm
3. 50% of the load at which the total displacement equals 10% of the pile diameter.

In addition to assessing the design load, the pile test may be used to establish the construction driving criteria. A comparison is made with the pile – driving records and the measured ultimate load, with dynamic pile driving formula to establish the driving specification.

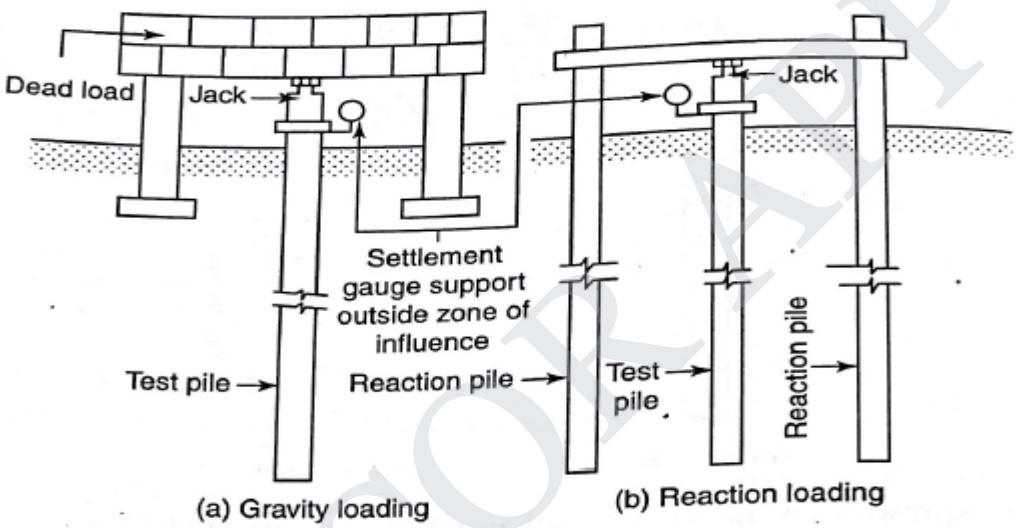

13. Proportion a trapezoidal footing in line with the outer faces of both the columns with the following data (May/June 2012)

Column	Load	Size
C_1	1000KN	50cm x 50cm
C_2	850KN	40cm x 40cm

Centre to centre spacing of columns is 5m. The allowable bearing capacity is 100KN/m².

Area = ($p_1 + p_2 + 0.1 (p_1 + p_2)$ / safe bearing capacity)

$$= \frac{1000 + 850 + 0.1 (1000 + 850)}{100}$$

= 20.3 m².

Area = 0.5 L ($B_1 + B_2$)

L = 5 + (0.5/2) + (0.5/2) = 5.5m

20.3 = 0.5 x 5.5 ($B_1 + B_2$)

$B_1 + B_2 = 7.4$

$X' = (P_s x S) / (P_1 + P_2)$

$= (850 X 5) / 1850$

$= 2.29$ m

$X_1 = a + (b_1/2) + X'$

$= 0 + (0.5/2) + 2.29 = 2.54$m

$X_1 = (L/3) x [(B_1 + 2 B_2) / (B_1 + B_2)]$

$2.54 = (5.5/3) [(B_1 + 2 B_2) / (B_1 + B_2)]$

$1.39B_1 + 1.39B_2 = B_1 + 2B_2$

$0.39B_1 – 0.61B_2 = 0$

Solving eq 1 and 2, We get

$B_1 = 4.514$m.

$B_2 = 2.889$m.

14. A footing 3 m x 2 m in plan transmits a pressure of 160 kN/m² on a cohesive soil having E=9 x 10⁴kN/m² and μ= 0.46. Determine the immediate settlement of the centre, assuming the footing to be flexible and rigid. (Nov/Dec 2012)

1. **Flexible**

   $S_I = qB() = 160 x 2 x (1-0.46^2)/ (9 x 10^4) x 1.52 = 4.26$ mm

2. **Rigid**

   $S_I = qB() = 160 x 2 x (1-0.46^2)/ (9 x 10^4) x 1.2 = 3.36$ mm

15. What are the different types of mat foundations? Explain each of them in detail. (May/June 2012)

The types of mat foundation commonly employed are

- Flat plate mat
- Plate thickened under columns
- Two-way beam and slab
- Plate with pedestal
- Rigid frame mat
- Piled raft

1. **Flat Plate Mat -** A flat plate mat is used for fairly small and uniform column spacing and relatively light loads. A flat plate type of mat is suitable when the soil is not too compressible.
2. **Plate Thickened under Columns -** For columns subjected to very heavy loads usually the flat plate is thickened under columns as shown in Fig 2 to guard against diagonal shear and negative moments.
3. **Two-way Beam and Slab -** When the column spacing is large and carries unequal loads it would be more economical if a two-way beam and slab raft as shown in Fig 3 is used. This type of mat is particularly suitable when underlying soil is too compressible.
4. **Plates with Pedestals** – The function of this mat is same as that of flat plate thickened under columns. In this mat pedestals are provided at the base of the columns.
5. **Rigid Frame Mat** – This type of mat is used when columns carry extremely heavy loads. In such design, basement walls act as ribs or deep beam. When the depth of beam exceeds 90 cm in simple beam and slab mat, a rigid frame mat is referred.
6. **Piled Raft** – In this type of construction the mat is supported on pile. This type of mat is used where the soil is highly compressible and the water table is high. This type reduces settlement and control buoyancy.

16. The soil profile at a site consists of clay of unconfined compressive strength of 110 kPa and unit weight 19 kN/ extending to a great depth. A raft foundation of plan dimensions of 40m x 16m is to be installed at a depth of 3m below ground level and it carries a load of 100 MN including its self weight. There is provision for basement floor. Determine the factor of safety as per BIS 6403. (Nov/Dec 2011)

Solution

= c

C = 110/2 = 55 kPa

= 5.14

= 1 + 0.2 x 16/ 40 = 1.08

= 1.0 (backfilling not done)

= 55 x 5.14 x 1.08 x1 x1 = 305.32 kPa

P = 100 x / 40 x 16 = 156.25 kPa

F = 305.32/ (156.25 – 3 x19) = 3.08

17. Proportion a strap footing for the following data : (May /June 2010)

Allowable pressures: 150 kN/m³ +reduced L.L

225KN/m³ + L.L

Column loads	column A	column B
DL	500kN	600 kN
LL	450kN	800 kN

Proportioning the footing for uniform pressure under DL + reduced LL. Distance of c/c of column =5.4m. Projection beyond column should not be more than 0.5m.

For column 1, reduced LL = 450 x 0.5 = 225kN

For column 2, reduced LL = 800 x 0.5 = 400kN

Thus P1= D.L + reduced LL = 725kN

P2 = D.L + reduced LL = 1000kN

(i) Assuming e = 0.6m

(ii) Given L = 5.4m

(iii) L'= L-e = 5.4-0.6 = 4.8m

R1= (P1 XL)/ L' = 815.56kn

R2 = P1+P2-R1 = 909.375kn

(iv) qs 1= R1/(L1XB) = 149.18kN

Qs2 = R2/ (L2XB) = 136.7kN

As qs1 & qs2 < qa, the conditions are satisfied. The dimensions are B = 2.472 m, L1= 2.2 m, L2 = 2.696 m

UNIT 4

PILE FOUNDATION

PART A

1. **State Feld's rule for determining group capacity of pile groups. (May/June 2016) (Nov/Dec 2012)**

   The use of Feld's rule is probably the simplest. It states that the load capacity of each pile in a group is reduced by 1/16 on account of the nearest pile in each diagonal or straight row.

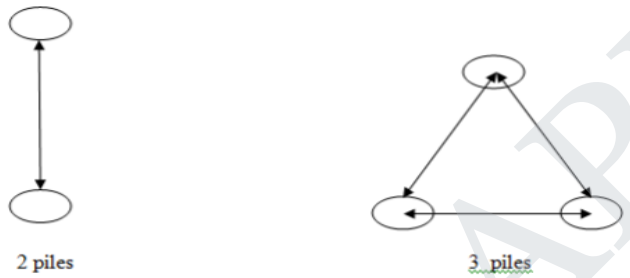

2 piles

n =15/16 = 94%

3 piles

n =14/16 = 87%

2. **What is under reamed pile? When is it preferred? (May/June 2016)**

   These are bored, cast in-situ, concrete piles with one or more bulbs formed by enlarging the pile stem. They are suitable for loose and filled up sites, or where soils are weak or expansive like black cotton soil.

   They are also effective in resisting the downward drag due to the negative skin friction that arises in loose or expansive soils. Bulb spacing should not exceed 1.5 times the bulb diameter.

3. **What are the methods available to determine load carrying capacity of pile? (Nov/Dec 2015) (May/June 2010)**

   The different methods are:

   - Dynamic formulae
   - static formulae
   - Pile load tests
   - Penetration test

4. **For a pile designed for an allowable load of 400 kN driven by a steam hammer (single acting) with an energy of 221t-cm, what is the approximate terminal set of pile? (Nov/Dec 2015)**

5. **What type of piles would you recommend for the following types of soil and site conditions?**
   (a) For a multi-storeyed building in the central part of a city surrounded by existing buildings
   (b) For a harbour structure. (Apr/May 2015)

   (a) Combination of friction & End bearing piles.

   (b) End bearing piles.

6. **Does the choice of a pile hammer have any relevance to the type of pile? Give reasons. (Apr/May 2015)**

   Yes, the choice of pile hammer depends on the type of pile used.

   For instance if timber pile is used, it is driven by a double acting hammer and it cannot be driven by single acting hammer.

7. **How do the location of site and type of soil encountered influence the selection of the type of pile? (Nov/Dec 2014)**

   Cohesive soil – bored piles

   Cohesionless soil – bored piles or cast-in-situ concrete piles

8. **Can you design a driven pile using dynamic formula? Justify your answer. (Nov/Dec 2014)**

   Yes a driven pile can be designed using dynamic formula.
   Engineering News formula - used for wood piles driven with drop hammers and for short piles driven with steam hammers.
   Hiley's formula – used for piles driven in cohesionless soil.

9. **How piles are classified based on method of installation? (Nov/Dec 2013)**

   Driven piles
   Bored piles
   Cast in-situ piles
   Driven and cast in-situ piles
   Bored and cast in-situ piles

10. **What are the limitations of the dynamic pile load formula? (Nov/Dec 2013)(May /June 2012)**

    a) Dynamic formulae give no indication about probable future settlement of temporary changes in soil structure.

    b) It does not take into account the reduced bearing capacity of pile when in a group.

c) Dynamic pile driving formulae appear to be more applicable to piles driven into cohesionless soils.

d) there are a number of constants involved in the dynamic formula which may give chances to frequent errors.

11. What are anchor piles? (May/June 2013)

Anchor piles provide anchorage against horizontal pull from sheet piling or other pulling forces.

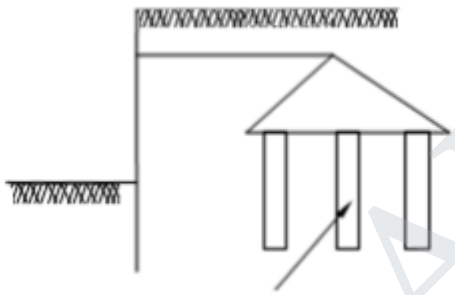

12. What are fender piles? (May/June 2013)

Fender piles or dolphins are used to protect water front structures against the impact from ships or other floating objects.

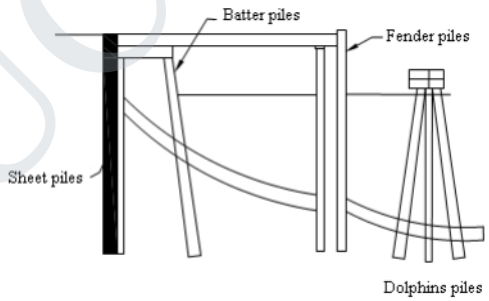

13. What are the uses of sand piles? (Nov/ Dec 2012)

Sand piles can be used as compaction piles. Compaction piles are used to compact loose granular soil to increase its bearing capacity. Compaction piles do not carry load and hence they can be of weaker material.

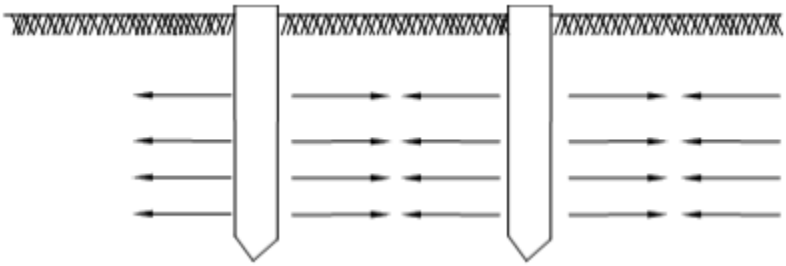

14. What are the factors governing the selection of piles? (Nov/ Dec 2012)

- Length of pile in relation to load and soil condition
- Behaviour of structure
- Type of loading
- Availability of material
- Ease of maintenance
- Cost of piles
- Availability of funds
- Ease of maintenance
- Factors causing damage

15. Define negative skin pressure. (Nov/ Dec 2012) (May/June 2010)

When the soil surrounding the pile shaft moves downward, relative to the pile shaft, the friction between the soil and the pile tends to drag the pile downwards. The skin friction in that case increases the pile load instead of resisting it. This additional load on the pile is known as negative skin friction.

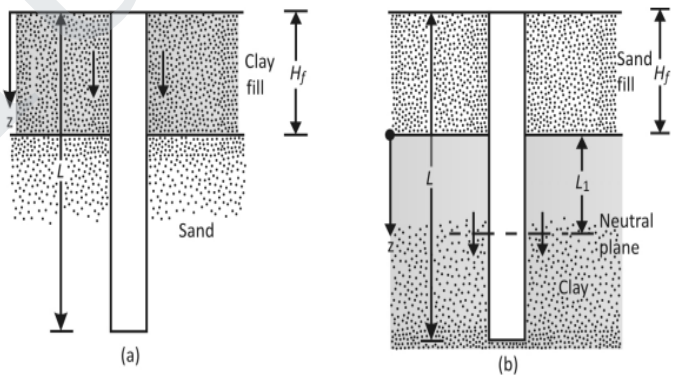

16. What is block failure? (May /June 2012)

Block failure is the single equivalent large pile concept for a pile group. Soil in between the piles may become "locked in" due to densification from pile driving and the group may tend to behave as a unit or and equivalent single large pile.

Block failure of pile groups is generally only a design consideration for pile groups in soft cohesive soils or in cohesion less soils underlain by a weak cohesive layer.

17. Can you design a pile based on dynamic formulae? Justify your answer. (Nov/Dec 2011)

Piles cannot be designed using dynamic formulae.
For the dynamic formulae to be used penetration of pile in the last few blows should be known.
Dynamic formulae can be used only to verify the load carrying capacity while driving.

18. What is meant by friction piles? (Nov/Dec 2010)

Friction piles are used to transfer loads to a depth of a friction load carrying material by means of skin friction along the length of the pile.

19. Write down the Meyerhof method for the elastic settlement of a pile group in sandy soil. (Nov/Dec 2010)

$$\frac{S_g}{S_i} = \frac{s\,(5-s/3)}{(1+1/r)^2}$$

S_g / S_i = settlement ratio
S_g = settlement of pile group
S_i = settlement of individual pile
s = ratio of pile spacing to pile diameters
r = no. of. rows in the pile group

20. What are the differences between a working pile and a test pile?

Test pile: meant only for testing; not supposed to carry structural load.

Working pile: meant not only for testing but also to carry structural load.

21. Say true or false and justify your answer: The efficiency of pile group driven in loose sand may be even more than 100%

True. Driving piles in loose sand improves density.

PART B

1. Classify the pile foundation based on (1) method of installation (2) load transfer mechanism. (May/June 2016) (Apr/May 2015)

(i) **Based on the mode of transfer of loads**, the pile can be classified into three categories:

End bearing piles
Friction piles
Combined end bearing and friction piles

End bearing piles

End bearing piles transmit the loads through their bottom tips. Such piles act as columns and transmit the load through a weak material to a firm stratum below. If bed rock is located within a responsible depth, piles can be extended to the rock.

The ultimate capacity of the pile depends upon the bearing capacity of the rock. If instead of bed rock, a fairly compact and hard stratum of soil exists at a reasonable depth, piles can be extended a few minutes piles are also known as "point-bearing piles".

The ultimate load carried by the pile (Qu) is equal to the load carried by the point or bottom end (Qp)

Friction piles

Friction piles do not reach the hard stratum. These piles transfer the loads through skin friction between the embedded surface of the pile and the surrounding soil. Friction piles are used when a hard stratum does not exist at a reasonable depth.

The ultimate load (Q_u) carried by the pile is equal to the sum of the load carried by the pile is equal to the load transferred by skin friction (Q_s).

Friction piles are known as floating piles as these do not reach the hard stratum.

Combined end bearing and friction piles

The piles transfers loads by a combination of end bearing at the bottom of the pile and friction along the surface of the pile shaft, the ultimate load carried by the pile is equal to the sum of the load carried by the pile point (Q_p) and the load carried by the skin friction(Q_s).

(ii) Classification based on method of installation

Based on the method of construction, the piles may be classified into the following 5 categories

(i) Driven pile
(ii) Driven and cast in situ piles
(iii) Bored and cast in situ piles
(iv) Screw piles
(v) Jacked piles

Driven piles

These piles are driven into the soil by applying blows of a heavy hammer on their tops.

Driven and cast in situ piles
These piles are formed by drawing a casing with a closed bottom end into the soil. The casing is later filled with concrete. The casing may or may not be withdrawn.

Bored and cast in situ pile
These piles are formed by a hole into the ground and then filling it with concrete.

Screw piles
These piles are screwed into soil.

Jacked piles
These piles are jacked into the soil by applying a downward force with the help of a hydraulic jack.

2. It is proposed to provide pile foundation for a heavy column; the pile group consisting of 4 piles, placed at 2m c/c, forming a square pattern. The underground soil is clay, having Cu at surface as 60 kN/m² and at depth 10m, as 100 kN/m² . Compute the allowable column load on the pile cap, if the piles are circular having diameters 0.5m each and length as 10m. (May/June 2016) (Nov/Dec 2010)

Solution:

i) Piles acting individually:

$Q_{un} = n(A_p r_p + A_s r_f)$

$= n(A_p r_p + d(L_1\alpha_1 C_{u1} + L_2\alpha_2 C_{u2}))$

$A_p = \pi/4(0.5)^2 = 0.1963\ cm^2$

$r_p = C_u N_c$

$= 100x9 = 900\ KN/m^2$

$Q_{un} = 4[0.1963x900 + \pi(0.5)x[10x2.5x10 + 10x2.5x100]]$

$= 4[176.67+3926.9] = 16414.28\ KN$

ii) Piles acting in a group

$B = 2x1+(0.5) = 2.5$

$Q_{ug} = A_{pg}gxr_p + A_{sg}r_{fg}$

$A_{pg} = (2.5x2.5) = 6.25m^2$

$R_p = C_u N_c = 9xC_u = 9x100 = 900KN/m^2$

$A_{sg} = 4BL_1 + 4BL_2$

$= 0 + 4x2.5x10 = 100$

A_{sg} = Surface = 60KN/m²

Q_{ug} = (6.25x900) + (100x 100)

= 5625+10000 =15625KN

Therefore safe load = $\frac{15625}{2.5}$

= 6250KN

3. A group of 9 piles, 12m long and 250mm in diamtere is to be arranged in a square form in a clay soil with an average unconfined compressive strength of 60 kN/m². Work out the c/c spacing of the piles for a group efficiency factor of 1. Neglect bearing at the tip of the piles. (May/June 2016)

Solution:

L = 12m

d = 250mm

C = q_u / 2

= 60 / 2

= 30 KN/m².

= 1

B = 2s + 0.25 (spacing)

(a) When pile acts individually

Q_u = n α A_s = 9 x 0.9 x 30 (π x 0.25 x 12) = 2290.2 kN

(b) When pile act as group

Q_{ug} = c A_s = c (4 BL) = 30 x 4 (2s +0.25) x 10 = 1200 (2s + 0.25)

= = 1

1 = [1200(2s +0.25)] / 2290.2 Therefore solving,

S = 0.829 m

4. Discuss the method of obtaining ultimate load and also allowable load on pile from pile load test. (May/June 2016) (May /June 2014) (Nov /Dec 2013) (May/June 2013)

PILE LOAD TESTS:-

The pile load test can be performed either on a working pile which form the foundation of the structure or on a test pile. The test load is applied with the help of calibrated jack placed over a rigid circular or square plate which in turn is placed on the head of the pile projecting above ground level. The reaction of the borne by a truss or platform which have gravity loading or alternatively, the truss can be anchored to the ground with the help of anchor pile. In the later case, under-reamed piles or soil anchor may be used for anchoring the truss.

The load is applied in equal increments of about one-fifth of the estimated allowable load. The settlements are recorded with the help of three dial gauge of sensitivity 0.02mm, symmetrically arranged over the test plate, and fixed to an independent datum bar. A remote controlled pumping unit may be used to hydraulic jack. Each load increment is kept for sufficient time till the rate of settlement becomes less than 0.02mm per hour. The test pile are loaded until ultimate load is reached. Ordinarily, the test load is increased to a value 2.5times the estimated allowable load or to a load which causes a settlement equal to one-tenth of the pile diameter, whichever occur earlier. The results are plotted in the form of load settlement curve. The ultimate load is clearly indicated by load settlement curve approaching vertical. If ultimate load cannot be obtained from the load settlement curve, the allowable load taken as follows:

CYCLIC LOAD TEST:

Pile testing constitutes a comprehensive and economical means to quantitatively evaluate the hammer-pile-soil system based on the measurement of pile force and velocity records under hammer impacts. Measurements, data processing and analysis are performed in real time in the field by state-of-art dedicated Pile Driving Analyser (PDA) equipment from PDITM. Testing results include estimation of pile load capacity, dynamic pile stresses and structural integrity & driving system performance. The Pile Driving Analysis is applicable on Bored cast-in-situ, drilled shafts, continuous flight auger & driven piles, this applies for either test pile or working pile.

Dynamic pile monitoring for construction quality control and verification testing are routinely performed on hundreds of project sites annually in India and around the world. Main objectives of dynamic pile testing include obtaining information on the following:

1. Hammer and driving system performance for productivity and construction control

2. Dynamic pile stresses during and after installation. To reduce the possibility of pile damage, stress must be kept within certain bounds

3. Pile integrity during and after installation

4. Static pile bearing capacity, at the time of testing. For the evaluation of long term capacity, piles are generally tested during re-strike some time after installation

We use an enhanced analysis, called CAPWAP, which enables us to correlate the measured data with the known pile / soil model elements. The end result of CAPWAP, via a rigorous

and repeated signal matching solution, produces a pile driving summary that contains pile capacity, per cent end bearing / skin friction, measured pile compression and tension stresses. Using this type of empirical and analytical data assistance, we can validate a project's design requirements with superior accuracy and speed.

- Estimates total bearing capacity of a pile or shaft
- Soil resistance parameters
- Resistance distribution along the shaft and at the toe
- Static load–settlement curves from the measured force and velocity data
- Total computed soil capacity – sum of Skin Friction and Toe Bearing
- Computed load against settlement curve
- Stresses at any point along the shaft

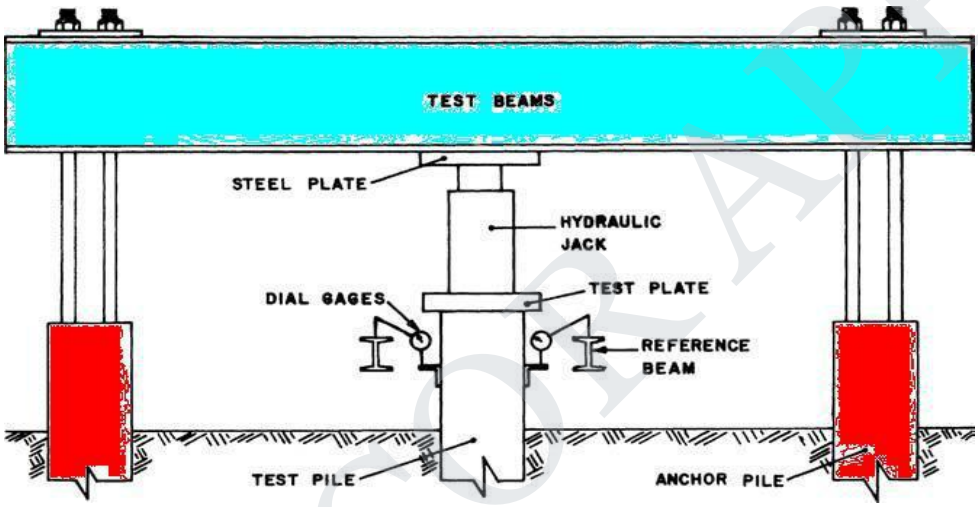

5. Explain in detail about various types of pile foundation with neat sketch and write their functions. (Nov/Dec2015)

CLASSIFICATION OF PILES

Piles can be classified according to

1. The material used
2. The mode of transfer of load - Refer Part B Q. No. 1
3. The method of construction - Refer Part B Q. No. 1
4. The use and
5. Displacement of soil

1. Classification according to material used

There are four types of piles according to materials used

(i) Steel piles
(ii) Concrete piles
(iii) Timber piles
(iv) Composite piles

(i) Steel piles

Steel piles are generally either in the form of thick pipes or rolled steel H- section. Pipe steel piles are driven into ground with their ends open or closed. Piles are provided with a driving point or shoe at the lower end.

Epoxy coatings are applied in the factory during manufacture of pipes to reduce corrosion of the steel pipes. Sometimes concrete encasement at site is done as a protection against corrosion. To take into account the corrosion, an additional thickness of the steel section is usually recommended.

(ii) Concrete piles

Cement concrete is used in the construction of concrete piles. Concrete piles are either precast or cast in- situ. Precast concrete piles are prepared in a factory or a casting yard. The reinforcement is provided to resist handling and driving stresses. Precast piles can also be pre-stressed using high strength steel pre-tensioned cables.

A cast in-situ pile is constructed by making a hole in the ground and then filling it with concrete. A cast in situ pile may be cased or uncased. A cased pile is constructed by driving a steel casing into the ground and filling it with concrete. An uncased pile is constructed by driving to the desired depth and gradually withdrawing casing when fresh concrete is filled. An un-casted pile may have a pedestal.

(iii) Timber piles

Timber piles are made from tree trunks after proper trimming. The timber used should be straight, sound and free from defects.

Steel shoes are provided to prevent damage during driving. To avoid damage to the top of the pile, a metal bond or a cap is provided. Splicing of timber piles is done using pipe sleeve or metal straps and bolts. The length of the pipe sleeve should be atleast five times the diameter of the pile.

Timber piles below the water table have generally long life. However above the water table, these are attacked by insects. The life of the timber piles can be increased by preservatives such as creosote oil. Timber piles should be used in massive environment where these are attacked by various.

(iv) Composite piles

A composite pile is made of two materials. A composite pile may consist of the lower portion of steel and the upper portion of cast in-situ concrete.

A composite may also have the lower portion of timber below the permanent water table and the upper portion of the concrete.

As it is difficult to provide a proper joint between two dissimilar materials, composite piles are rarely used in practice.

2. Classification based on use

The piles can be classified into the following 6 categories depending upon their use.

(i) Load bearing piles

(ii) Compaction piles
(iii) Tension piles
(iv) Sheet piles
(v) Fender piles
(vi) Anchor piles

(i) Load bearing piles

These piles are used to transfer the load of the structure to a suitable stratum by end bearing by friction or by both.

(ii) Compaction piles

These piles are driven into the loose granular soil to increase the relative density. The bearing capacity of the soil is increased due to densification caused by vibrations.

(iii) Sheet piles

Sheet piles forms a continuous wall or bulk head which are used for retaining earth or water.

(iv) Fender piles

Fender piles are sheet piles which are used to protect water front structures from impact of ships and vessels.

(v) Anchor piles

These piles are used to protect anchorage for anchored sheet piles. These piles provide resistant against horizontal pull for a sheet pile wall.

3. Classification based on displacement of soil:

Based on the volume of the soil displacement during installation the piles can be classified into 2 categories

(i) Displacement piles
(ii) Non- displacement piles

(i) Displacement piles

All driven piles are displacement piles as the soil is displacement laterally when the pile is installed. The soil gets densified. The installation may cause heaving of the surrounding ground. Precast concrete pile and closed end pipe pile are high displacement piles. Sheet H-piles are low displacement piles.

(ii) Non- displacement piles

Bored piles are non- displacement piles. As the soil is removed when the hole is bored, there is no displacement of the soil during installation. The installation of these piles causes very little change in the stresses in the surrounding soil.

6. Write short notes on :

(i) Negative skin friction

(ii) Under reamed piles

(iii) Pile caps

(iv) Settlement of pile group in clay **(Nov/Dec 2015)**

Negative skin friction

A negative skin friction is a phenomenon that arises from a settlement of soil in the vicinity of a pile. The soil deforming around the pile tends to pull the pile downwards thus reducing its bearing capacity for a given pile settlement.

The input parameters for assessing the influence of negative skin friction is the settlement of ground surface w and a depth of influence zone of this deformation h. For a uniformly distributed load around the pile the value of w should be measured in the distance equal to three times the pile diameter from its outer face. The value then represents the depth influenced by the ground surface settlement and below which the soil is assumed incompressible with no deformation.

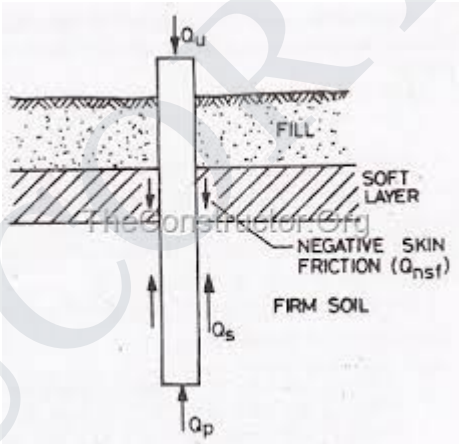

Under – reamed pile foundation **(Apr/May 2105)**

Under reamed piles are bored cast in-situ concrete piles having one or more bulbs formed by enlarging the bore hole for the pile stem by an under reaming tool.

These piles find applications in widely varying situations in different types of soils where foundation are required to be taken down to a certain depth to avoid the undesirable effect of seasonal moisture changes as in expansive soils or to reach strata or to obtain adequate capacity for downward, upward and lateral loads or to take the foundations below scour level and for moments.

When the pile has only one bulb, it is known as single under –reamed pile, while the pile with more than one bulb is known as multi –under –reamed pile. Generally, the diameter of under –reamed bulbs is kept equal to 2.5 times the diameter of pile stem.

However, it may vary from 2 to 3 times the stem diameter, if required, depending upon the design requirements and feasibility of construction.

Details of pile and under reamed bulb:

In deep layers of expansive soils, the minimum length of pile required is 3.5 m where the ground movements become negligible.

In shallow depths of expansive soils and other poor soils depending upon the load poor soil requirements the length may be reduces and the piles may be taken upto at least 50 cm in stable zone pile length may be increased for higher loads.
The diameter manually bored piles range from 20 cm to 37.5 cm.

The spacing of the piles of the piles shall be considered in relation to the nature of the ground, the types of piles and the manner in which the piles transfer the loads to the ground.

Generally, the center to center spacing for under-reamed piles should not be less than 3 D_u.

It may be reduced to 1.5 D_u when a reduction in load carrying capacity of 10 % should be allowed.

For the spacing of 2 D_u the bearing capacity of pile group may be taken equal to the number of piles multiplied by the bearing capacity of individual pile.

If the adjacent piles are of different diameters, an average value for spacing should be taken.

The maximum spacing of the under-reamed pile should not normally exceed 2 ½ meters so as to avoid heavy capping beams.

In building, the piles should generally be provided under all wall junctions to avoid point loads on beams.

Position of intermediate piles are then decided trying to keep the door opening fall in between two piles as far as possible.

In double and multi-under-reamed piles of size less than 30 cm dia., the center-to-center vertical spacing between the two under reams may be kept equal to 1.5 D_u while for piles of 30 cm and more this distance may be reduced to 1.25 D_u. the upper bulb should not bu lb is 1.5m or 2 D_u whichever is greater.

Under reamed piles can be made at a better also, for sustaining large lateral loads, thus making them suitable for tower footing, retaining walls and abutments. They have also been found useful for factory buildings, machine foundations and transmission line towers and poles.

In black cotton soils and other expansive soils, the under reamed pile anchors the structures at a depth where the volumetric changes in soils due to seasonal and other variation is negligible.

Pile caps

A **pile cap** is a thick concrete mat that rests on concrete or timber piles that have been driven into soft or unstable ground to provide a suitable stable foundation. It usually forms part of the foundation of a building, typically a multi-story building, structure or support base for heavy equipment. The cast concrete pile cap distributes the load of the building into the piles.

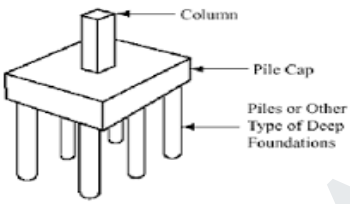

Settlement of pile group in clay

The settlement of a group of friction piles can be computed on the assumption that the clay contained between the top of the piles and their lower third point is incompressible and that the load is applied to the soil at this lower third point of the pile. The presence of pile below this level is ignored. The loads is assumed to be uniformly distributed at this level, and is assumed to spread at any angle 30 degree with the vertical.

Settlement

7. In a two layered cohesive soil, bored piles of 400 mm are installed. The top layer has a thickness of 5m and the bottom one is of considerable depth. The shear strength of the top layer is 45 kN/m² and that of the bottom layer is 100 kN/m². Determine the length of the bored pile required to carry a safe load of 380kN, allowing a factor of safety 2.5.

(Apr/May2015)

Solution

$\alpha = 0.5$

L_1 and L_2 are the depths of embedment of pile in top and bottom layers respectively, then.

$Q_a = Q_{ult} / FOS$

$Q_{ult} = 380 \times 2.5 = 950$ kN

$= C + C + C$

$= 100 \times 9 \times (\pi \times 0.4 \times 0.4)/4 + 0.5 \times 45 \times \pi \times 0.4 \times 5 + 0.5 \times 100 \times \pi \times 0.4 \times L_2$

950 = 254.5 + 62.8 L_2

L_2 = 11m

Therefore length of the pile = 5 + 11 = 16m

8. A 4 x 3 pile group has the following details:

Diameter of each pile d = 350mm
C/C spacing of pile = 1,050 mm
Capacity of single pile = 400 kN
Determine the efficiency of the free standing pile group. (Apr/May2015)

Solution

$n_1 = 4$ $n_2 = 3$
d = 350 mm s = 1,050 mm
θ =
η_g = { 1- []18.4} x 100
= (1- 0.29) x 100
= 71 %
Efficiency =

kN

9. In a 16 pile group, the pile diameter is 45 cm and c/c spacing of the piles in a square group is 1.5m. If c = 50 kN/m², determine whether the failure would occur with the pile acting individually, or as a group? Neglect bearing at the tip of the pile. All piles are 10m long. Take m = 0.70. For shear mobilisation around each pile. (May /June 2014)

Solution

n = 16, d = 45 cm, L = 10m

Width B = (150 x 3) + 45

= 495 cm

(a) Capacity of group

Q_{ug} = c x 4 B x L

= 50 x 4 x 4.95 x 10

= 9900 kN

(b) Individual pile capacity

Q_{ug}

= n { m c Ap }

Ap = π d L = π x 0.45 x 10

Q_{ug}π x 0.45 x 10 = **7917 kN,** which is less than that carried by group action. Foundation will fail by the piles acting individually, load at failure would be 7917 kN

10. Determine the group efficiency of a pile group which consists of 16 piles of each 20m long and diameter with c/c distance on both directions equal to 1m which are embedded on a clay deposit having cohesive strength of 35 kN/m² by static method. Feld's rule and Converse Labara formula. Take adhesion factor as 0.6. (Nov/Dec 2013)

Solution

Converse Labarre formula (static method)

Piles acting individually

$Q_{up} = A_s \Upsilon_f + A_p \Upsilon_p$
$A_s = \pi dl = 37.699 m^2$
$\Upsilon_f = m\hat{c} = 21$
$\Upsilon_p = N_p C_p = 315$
$Q_{up} = 880.75N$

No of piles = 16
Pile capacity = 16 X 880.75 = 14092 N
Pile acting in a group = $Q_{ug} = A_s \Upsilon_f + A_p \Upsilon_p$
$Q_{ug} = 10130.4t$
Efficiency=
η=71.8%
Feld's Rule;
4 Corner Piles=21.87%
8 Boundary Piles=40.62%
4 Centre Piles=18.75%
Converse Labarre equation (η_g) =
Θ=30.96˚
η_g=48.4%

11. Explain the various stages involved in the construction of under reamed pile foundation. (May/June 2013)

1. Boring by augers
2. Under reaming by under-reamer
3. Placing of reinforcement cage in position
4. Concreting of pile
5. Concreting of pile caps, plinth beams and curtain walls.

12. A precast concrete pile of diameter 40cm is to be driven in stiff clay. The unconfined compressive strength of the clay is 180KN/m². What is the length required to be penetrated by the pile to support a safe working load of 350KN. Take adhesion factor as 0.7. (May /June 2012)

Solution

$C = q_u / 2$

$= 180 / 2$

$= 90KN/m^2$.

Let us assume length of pile as 10m and FOS as 3.

Bearing capacity of a single pile Q_{ult} $= D\, l\, \alpha\, C$

$= 3.14 \times 0.4 \times 10 \times 0.7 \times 90$

$= 791.68KN$.

$Q_a = Q_{ult} / FOS$

$= 791.68 / 3$

$= 263.89KN$.

No of piles , $n = P/ Q_a$

$= 350 / 263.89$

$= 2$

Length of pile = (1.32 x 10) / 2 = 6.6m

LENGTH OF THE PILE = 6.6m.

13. How is negative skin friction estimated? How does it affect the load carrying capacity of pile? Explain. (May /June 2012)

A negative skin friction is a phenomenon that arises from a settlement of soil in the vicinity of a pile. The soil deforming around the pile tends to pull the pile downwards thus reducing its bearing capacity for a given pile settlement.

The input parameters for assessing the influence of negative skin friction is the settlement of ground surface w and a depth of influence zone of this deformation h. For a uniformly distributed load around the pile the value of w should be measured in the distance equal to three times the pile diameter from its outer face. The value then represents the depth influenced by the ground surface settlement and below which the soil is assumed incompressible with no deformation.

Computation of negative skin friction is carried out first while determining the limit shear forces transmitted by the pile skin T_{lim}. The solution procedure assumes that the soil settlement decreases linearly with depth from the value of w on the ground surface up to 0 at a depth of h. The specific value of the soil settlement is therefore assumed for each level below the ground surface till the depth of h. The forces developed in springs of pile segments due to their deformation are determined and then subtracted from T_{lim} to reduce the bearing capacity of the pile skin.

From the presented theory it is evident that for large settlement w or large depth h the values of T_{lim} may drop down to zero. In extreme cases the negative skin friction may completely eliminate the skin bearing capacity so that the pile is then supported only by the elastic subsoil below the pile heel.

14. A square pile of side 400 mm and length 15 m is driven in a deposit of sand with angle of internal friction of 36 °, specific gravity of solids of 2.7 and void ratio of 0.7. The ground water table is quite close to the ground level. Determine the safe load that the pile can carry with a factor of safety of 3 against shear failure. Take lateral earth pressure coefficient as 1.0. For Ø = 36 °, N_q = 58 and N_γ = 56. Angle of wall friction shall be taken as 27 °. (Nov/Dec 2011)

Solution

15 x 0.4 = 6 m $\gamma' = 1.7 / 1.7 \times 7.81 = 9.81$ kN / m³

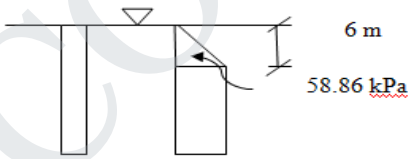

Effective pressure at 6 m = 6 x 9.81 = 58.86

$$Q_u = (58.86 \times 58 + 1/2 \times 0.4 \times 9.81 \times 56) \times 0.4^2$$
$$+ 1.0 \times 58.86 / 2 \times \tan 27 \times 4 \times 0.4 \times 6$$
$$+ 1.0 \times 58.86 \times \tan 27 \times 4 \times 0.4 \times 9$$
$$= 1139.6 \text{ kN}$$
$$Q_s = 379.87 \text{ kN}$$

15. A group of 9 piles of diameter 400 mm is spaced at 1.2m c/c in a square pattern. The pile group of length 7.2 m is driven into a clay extending upto 10 m below the ground level. The clay layer is underlain by an incompressible layer. The specific gravity of solids, unit weight and compression index of the clay are 2.65, 18.5 kN/m³ and 0.18 respectively. Make an estimate of settlement of the pile group if the total load of the pile group if the load on the pile group including pile cap is 1200 kN. Assume the water table to be quite close to the ground level. (Nov/Dec 2011)

Solution

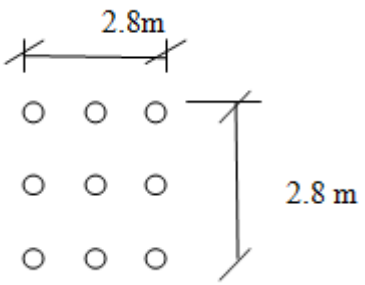

$C_c = 0.18$
H = 5.2 m

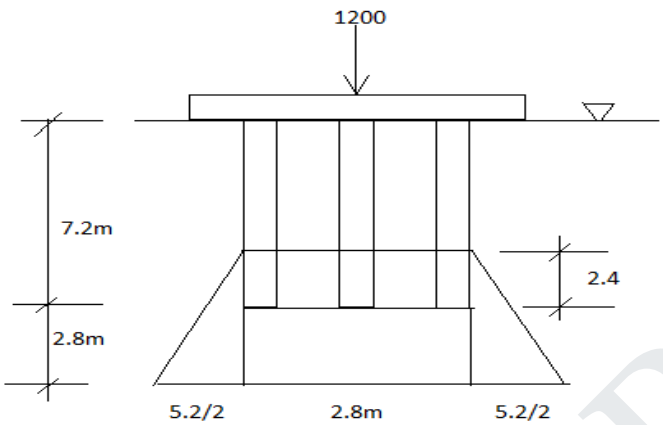

(2.65 + e) x 9.81 / 1+ e = 18.5

2.65 + e = 1.885 + 1.885e
e = 0.863

P_o = (4.8 + 5.2 / 2) x (18.5 – 9.81)
= 64.31 kPa
ΔP = 1200/ 8 x 8 = 18.75 kPa

S = 18 x 5.2 / 1.863 log (64.31 + 18.75/64.31)

= 0.056 m = 5.6 cm

16. State the situation where under reamed pile foundation is adopted. Discuss its salient features with a sketch. (Nov/Dec 2011)

Lightly loaded structure on Expansive soil

Description – refer previous questions on under reamed piles.

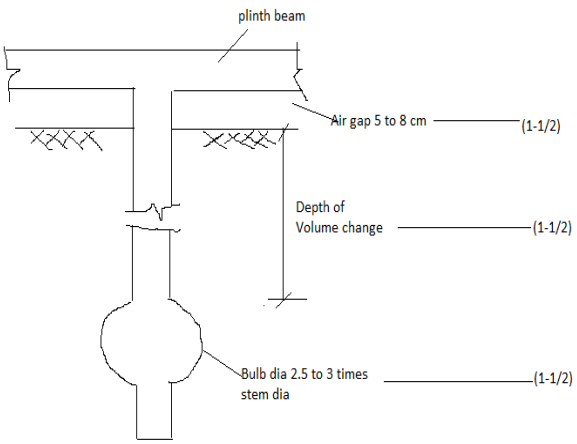

17. A concrete pile 9m long was driven by a single acting Vulcan hammer with rated energy 35.26kg. The total settlement as recorded for the last 10 blows was 2.5mm per blow. Using Engineering News formula, calculate the pile capacity. (Nov/ Dec 2010)

Solution

Energy = 35.26KJ

= 35.26KN = W

S = 2.5

$Q_a = \frac{WH}{F(S+C)}$ (Engineering News Formula)

$\frac{35.26x900}{6x(2.5+0.25)} = 31734/18$

Q_a= 1763KN

18. Design a square pile group to carry 400 KN in clay with an unconfined compression strength of 60KN/m². The piles are 30 cm in diameter and 6 m long. Adhesion factor can be taken as 0.6. (Nov/ Dec 2010) (Nov/Dec 2012)

Solution:

Length of the pile= 6m, Diameter 0.6 m

Bearing capacity of single pile = 400KN

Q_{ult}= πDLαC = πxo.6x6x0.6x10 =203.57 KN

Q_{ult}= 203.57/3 =67.856 KN

No of piles n=400/67.857=5.89

9 number (Square arrangement) C=60/2=30

To find spacing : Always optimum spacing should be provided

$\pi D l \alpha c n = P l c$

$\pi D \alpha n = P$

$\pi x 0.6 x 0.6 x 9 = 4x(2S+d)$

$10.178 = 4\ (2S+0.6)$

$2.54 = 2S+0.6$

$S = 0.97m$

19. A reinforced concrete pile weighing 40 kN is driven by a drop hammer weighing 40 kN and having an effective fall of 0.8m. The average set per blow is 1.4cm. The total temporary elastic compression is 1.8cm.assuming the coefficient of restitution as 0.25 and a factor of safety 2, determine the ultimate and allowable load on pile.
(May /June 2010)
Solution
Take efficiency as 100%
Using hilley's formula :

$Q = (\eta h .w. \eta b) / (s+c/2) = 7.5$

Thus $\eta b = w+e.p^2 / (w+p) = 60\% = 0.6$
(i) $Qf = \eta h .w.H.\eta b / (S+C/2) = 834.78kN$
(ii) $Qa = Qf / FOS = 834.78/2 = 417.78kN$

(ii) Explain the factors governing the efficiency of group piles. (May /June 2010)

Factors are:

- Characteristics of pile material
- Spacing of pile
- Total number of piles in a row
- Number of rows etc.

20. It is proposed to transfer the total of 1830 kN of a structure through 12.5m long driven piles in a deep deposit of clay of unconfined compressive strength of 65 kPa .the design diameter of the pile is 300 mm. Estimate the number of piles required adopting a factor of safety of 2.5 .also, suggest the arrangement of piles. Take adhesion factor as 0.7.

Solution

= C + C

= 32.5 x 9 x + 0.7 x 32.5 x x 0.3 x 12.5 = 288.69 kN

Ultimate loading carrying capacity required = 1830 x 2.5 kN

No of piles = 1830 x 2.5 / 288.69 = 15.84, say 16

Draw fig

32.5 x 9 x x 32.5 x 4 x (2s + 0.3) x 12.5 = 16 x 288.69

s = 0.88 m say 0.9 m

21. A pile group of 3 rows with 3 piles in arrow is made in a uniform clay deposit extending for a large depth with an unconfined compressive strength of 150 kPa. The diameter and length of the piles are 500 mm and 12m respectively .the c/c spacing of the piles is 1.5 m in both the directions. The adhesion factor can be taken as 0.4 .find the load carrying capacity of the pile group by converse labarre's formula and Terzaghi,s approach.

Solution

= C + C

= 75 x 9 x x + 0.4 x 0.75 x x 0.5 x 12 = 698 kN

Converse – labarre

= = 18.43

= 1 – θ (m x (n -1)+ n x (m -1)) / 90 x m x n

= 1 – 18.43 (3 x2 + 3 x2) / 90 x 3 x3 = 72.7%

= 0.727 x 9x 698 = 4566.8 kN

Terzaghi

= 9 x 698 = 6282 kN

= 75 x 9 x + 75 x 4 x 3.5 x 12 = 20868 kN

= minimum of the two = 6282 kN

UNIT V
RETAINING WALLS

PART A

Draw the variation of lateral earth pressure with wall movement. (May – June 2016) (Nov/ Dec 2010)

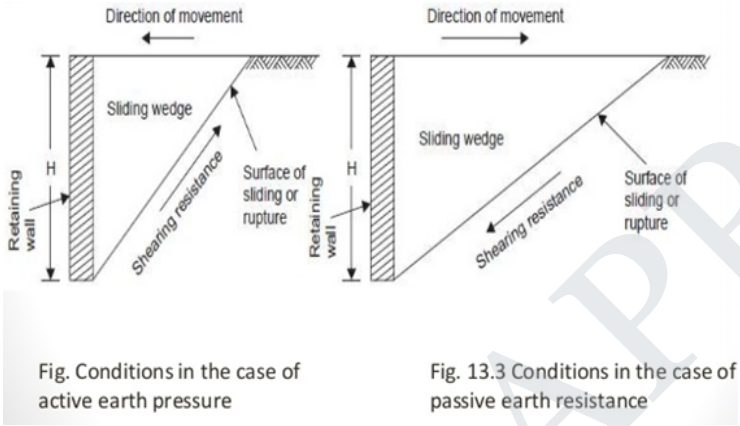

Fig. Conditions in the case of active earth pressure

Fig. 13.3 Conditions in the case of passive earth resistance

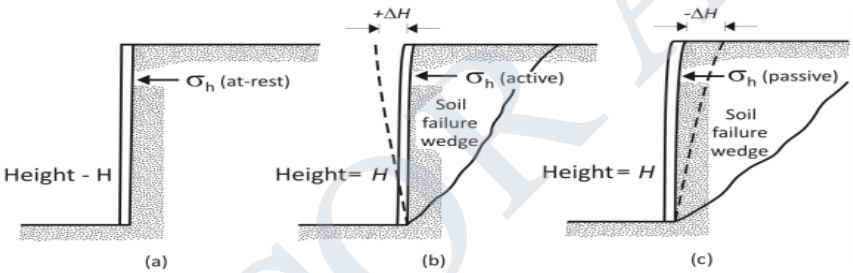

Draw the force polygon for lateral active earth pressure on wall retaining cohesionless soil according to Coulomb's wedge theory. (May – June 2016)

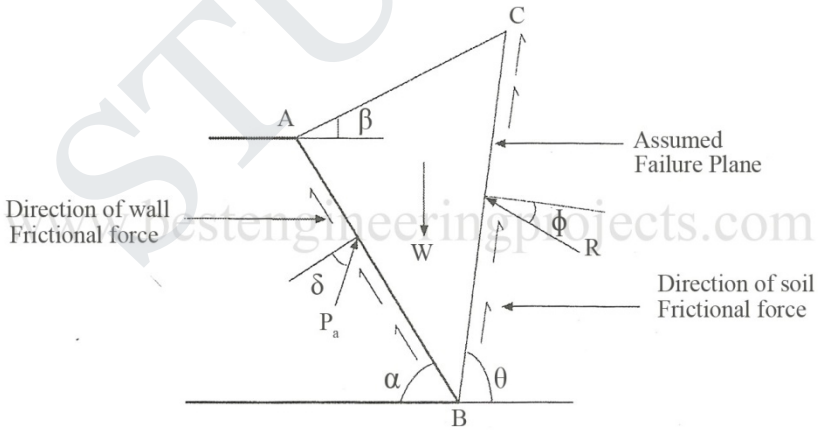

3. **Define Surcharge angle. (Nov – Dec 15) (May – June 14) (May – June 2013)**

The position of the backfill lying above a horizontal plane at the elevation of the top of a wall is called the surcharge, and its inclination to the horizontal is called surcharge angle ().

4. What force is acting on the retaining wall? (Nov – Dec 2015)

Lateral force: Earth pressure due to backfill and surcharge

Vertical force: Self weight of the retaining wall, weight of soil above heel slab

Weight of soil below base slab

5. Why only granular materials are preferred for the backfill of a retaining wall? (Apr – May 2015)

It is common to use granular backfill behind retaining walls instead of cohesive backfill to reduce wall pressures. Reason being that a higher friction angle results in lower lateral coefficients and cohesive strength is typically ignored in the design.

6. How do tension cracks influence the distribution of active earth pressure in pure cohesion? (Apr – May 2015)

A tension crack is developed in the soil near the top of the wall, due to negative pressure upto a height of z_0. Also, the net pressure upon a depth 2 z_0 is zero. This means that the cohesive soil should be able to stand with a vertical face upto a depth of $2z_0$ without any lateral support.

The fig shows the variation of lateral pressure along the height of the retaining wall.

Active Earth Pressure of Cohesive Soil

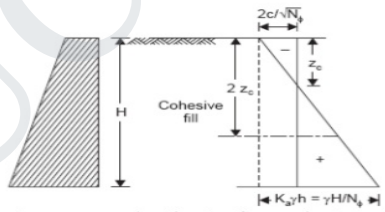

Fig. Active pressure distribution for a cohesive soil

For c- ϕ soil

$$P_a = \frac{\gamma H^2}{2N_\phi} - \frac{2cH}{\sqrt{N_\phi}} + \frac{2c^2}{\gamma}$$

For pure clay, ϕ = 0

$$P_a = \frac{1}{2}\gamma H^2 - 2cH + \frac{2c^2}{\gamma}$$

7. State the direction and magnitude of wall movement required for the mobilisation of active and passive earth pressure respectively. (Nov – Dec 2014)

Active case: wall moves away from the backfill.

Ka = (1- Sinϕ)/ (1+Sin ϕ). Pa= KaγH

Passive case: wall moves towards the backfill.

Kp = (1+ Sin ϕ)/ (1-Sin ϕ). Pp= KpγH

8. If the ratio between coefficient of passive earth pressure and that of active earth pressure is 9. Find the angle of internal friction of the soil. (Nov – Dec 2014)

/ = (45 + / (45 - = 9
= 30

9. What is earth pressure at rest? (May – June 2014) (May – June 13)

The earth pressure at rest, exerted on the back of a rigid, unyielding retaining structure can be calculated using theory of elasticity, assuming the soil to be semi-infinite, homogeneous, elastic and isotropic.

$Po = 0.5\ Ko\ H^2$

10. Why retaining walls are usually designed for active pressure? (Nov-Dec 2013)

Retaining walls usually designed for active pressure because, soil is in active state to pull the retaining wall away from fill. So that it is critical state the passive pressure.

11. What is meant by the critical depth of vertical cut for a clay soil? (Nov-Dec 2013)

Tension crack develop up to a depth of Z

The critical height (H_c) is called as "unsupported length or unsupported vertical cut" in cohesive soil. OR

12. Why weep holes are provided in retaining walls, abutments and wing walls? (Nov – Dec 2012)

Weep holes at the base of retaining walls are intended to bleed off excess moisture that collects behind the wall. In the old days the drain might simply be a burlap bag filled with pea gravel.

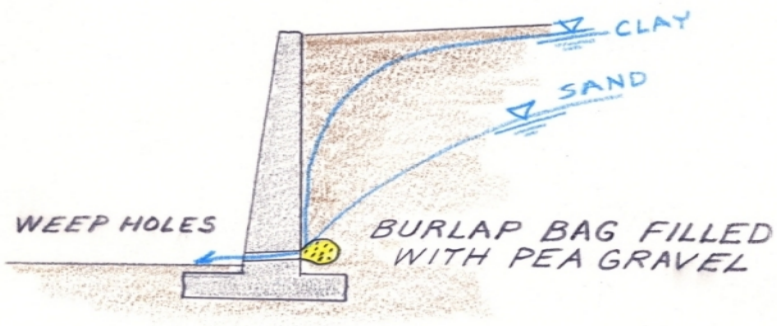

13. Draw a typical active earth pressure distribution diagram for a c- Φ soil backfill.
(Nov – Dec 2012)

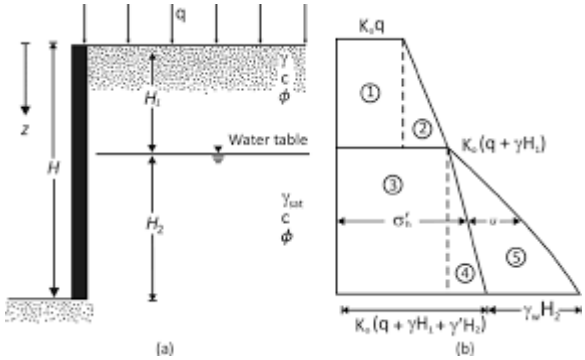

14. Write the types of retaining wall. **(Nov – Dec 2012)**

- Gravity retaining wall
- Counterfort retaining wall
- Cantilever retaining wall

15. Write any three assumptions of Rankine's theory. **(Nov – Dec 2012)**

- Soil mass is semi-infinite, homogenous, dry and cohesionless
- Ground surface is a plane which may be horizontal or inclined
- The back of the wall is vertical and smooth

16. What do you understand by plastic equilibrium in soils? **(May – June 2012)**

A body of soil is said to be in a state of plastic equilibrium, if every part of it is on the verge of failure. So this can be visualized by a perfectly rigid plastic model where with a stress strain relationship if we assume that it is rigid and perfectly plastic.

17. What is critical failure plane? **(May – June 2012)**

The idea behind critical plane models is that failure is caused by a crack. The crack will form and run on a plane, a critical plane, that has the most favorable stress/strain conditions for either crack growth, crack propagation, or both events. Planes that experience the highest normal stresses and strains are usually good candidates for a critical plane.

18. Say true or false and justify your answer: The greater the depth of tension cracks, the greater is the cohesion of clayey soil. (Nov – Dec 2011)

True

$Z_c = 2C/\gamma$; Greater the value of C, the greater is Z_c

19. If the Poisson's ratio of soil is 0.4, find its coefficient of earth pressure at rest. (Nov – Dec 11)

$K_o = \mu/(1-\mu)$

$K_o = 0.4/1-0.4 = 2/3 = 0.667$

20. What are the assumptions made in Coulomb's wedge theory? (May/ June 2011)

- Uniform c – ϕ
- Failure plane is straight
- Failure wedge is a rigid body
- Frictional force is developed along the wall boundary during the movement of wedge

21. For what type of soil Rankine's theory may be used? (May/June 2011)

Rankine's theory of earth pressure is applied to **uniform cohesionless soils only**. Later it was extended to include cohesive soils by Resal and Bell.

22. Define plastic equilibrium. (Nov – Dec 2010)

A mass of soil is said to be in a state of plastic equilibrium if failure is incipient or imminent at all points within the mass.

23. List the assumptions common to Rankine and Coloumb theory of soil pressure. (Nov/ Dec 2010)

- Soil mass is semi-infinitive
- Ground surface is a plane
- The back of the wall is smooth and vertical.

24. Distinguish between Rankine's theory from Coulomb's wedge theory. (May – June 10)

Rankine"s theory	Coulomb"s theory
The intensity of earth pressure at each depth is known. So point of application of the earth pressure is known at any depth	Only the total earth pressure value acting on the retaining structures can be calculated. The point of application of earth

	pressure can be calculated from Coulomb‟s assumption that all points on the back of the retaining wall are essentially considered as feet of failure surface
Wall is smooth and vertical	Wall is rough and sloped
Wall moved sufficiently so soil is a plastic failure mass	Wall is rigid, straight failure plane and rigid failure wedge

25. How do you check the stability of retaining wall? (May – June 10)

The stability of retaining wall is checked against:

a) Check for tension

b) Check for bearing capacity

c) Check for sliding

d) Check against overturning

PART B

1. Explain in detail about the Culmann's graphical method for finding the active pressure with neat sketch. **(Nov – Dec 2015)**
(Nov –Dec 2012)

Culmann (1866) also gave a graphical solution to evaluate the active pressure and can be conveniently used for ground surface of any shape, for various types of surcharging loads, and for a layered backfill of different densities.

PROCEDURE:

- Draw ground line, φ line and ψ line
  ($\psi = 90 - \theta - \delta$)
- Take slip plane BC1. Calculate weight of wedge ABC1 and plot it as BE1 to some scale on φ line. (This will be proportional to length L1)
- Through E1, draw E1F1 parallel to ψ line to cut the slip plane BC2 in F1
- Take a number of such slip planes BC2, BC3, BC4 etc. Plot the weight of corresponding wedges on the ψ line and obtain F2, F3, F4 etc
- Draw a smooth curve through points B, F1, F2, etc. This is known as culmann's line
- Draw tangent to culmann's line parallel to φ line. Max value of earth pressure is represented by intercept EF, EF being parallel to ψ line.
- To locate point of application of resultant pressure, draw line parallel to critical slip plane BC through centre of gravity of sliding wedge ABC and obtain its intersection on the back AB
- $P_a = ½ \gamma H_1 L (EF/BE)$
  (Refer text book for clear diagram denoting θ and δ**)**

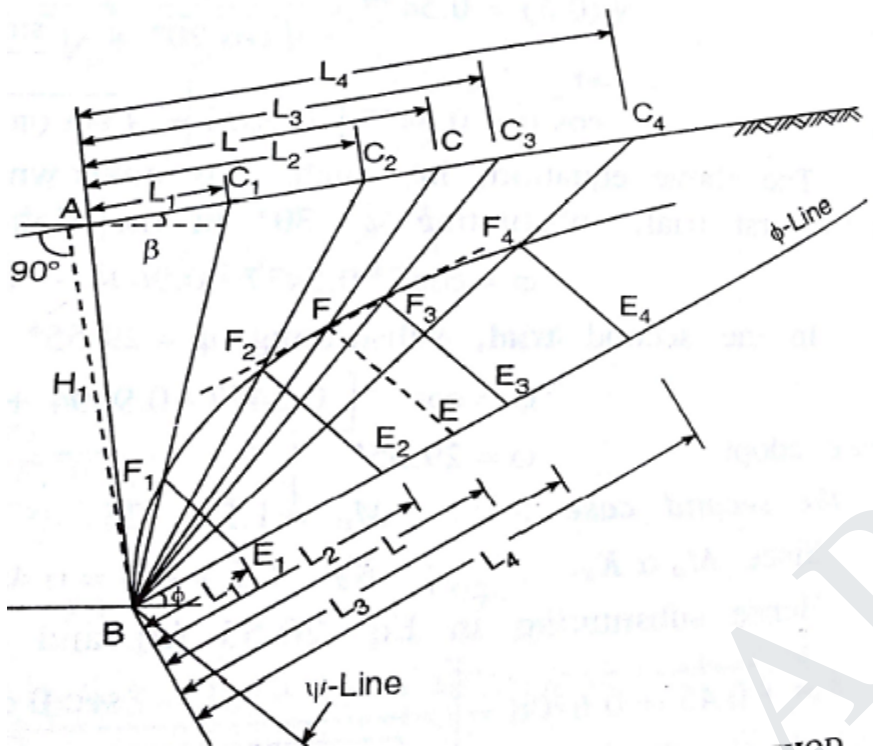

2. Discuss in detail about the Rankine's theory for the following cases of Cohesive soil and Cohesionless soil

(a) Submerged Backfill

(b) Backfill with sloping surface. **(Nov – Dec 2015) (May – June 13)**

<u>COHESIONLESS SOIL</u>

(a) Submerged backfill

In this case, the sand fill behind the retaining wall is saturated with water. Lateral pressure is made up of two components.

(i) Lateral pressure due to submerged weight γ' of the soil,
(ii) Lateral pressure due to water.

Thus, at any depth z below the surface

$P_a = K_a \gamma' z + \gamma_w z$

The pressure at the base (z =H) of the retaining wall is given by

$P_a = K_a \gamma' H + \gamma_w H$

The resultant active earth pressure is given by the area of the pressure distribution diagram.

$$P_a = \frac{1}{2}(K_a\gamma^1 H + \gamma_w H)H = \frac{1}{2}K_a\gamma^1 H^2 + \gamma_w H^2$$

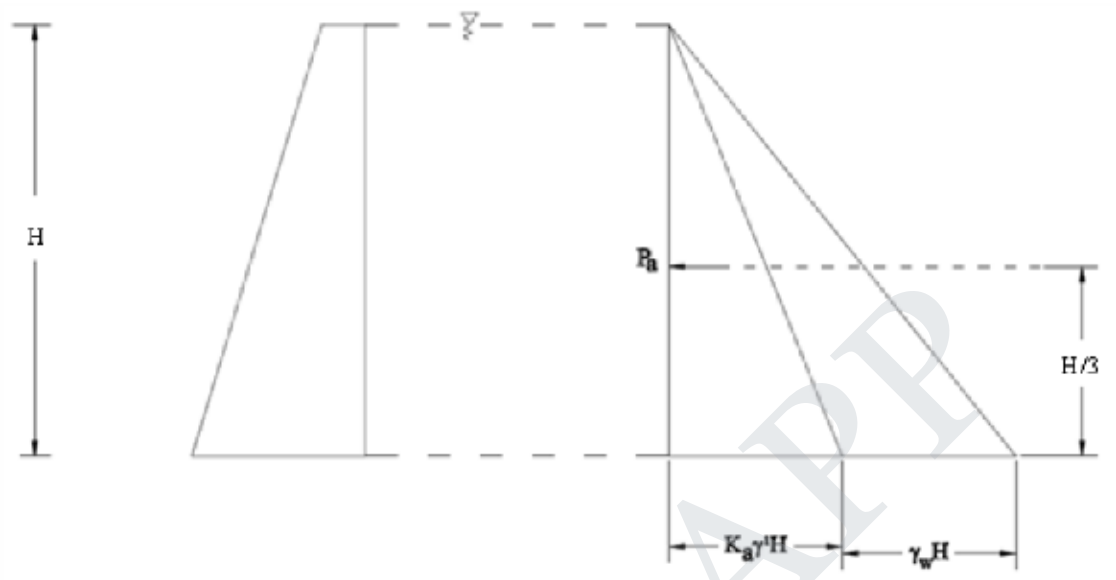

(b) Backfill with sloping surface

If we denote the lateral active earth pressure by p_a, we get

$$p_a = \sigma K = \gamma z \cos\beta \left[\frac{\cos\beta - \sqrt{\cos^2\beta - \cos^2\phi}}{\cos\beta + \sqrt{\cos^2\beta - \cos^2\phi}}\right]$$

we can also write,

$$p_a = K_a\gamma z$$

$$\text{where } K_a = \cos\beta \left[\frac{\cos\beta - \sqrt{\cos^2\beta - \cos^2\phi}}{\cos\beta + \sqrt{\cos^2\beta - \cos^2\phi}}\right]$$

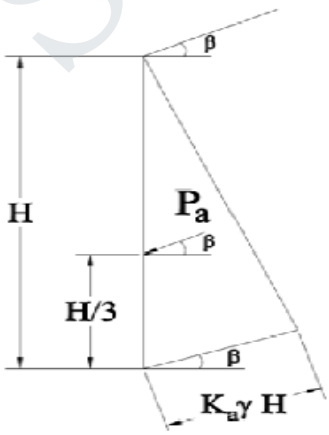

COHESIVE SOIL

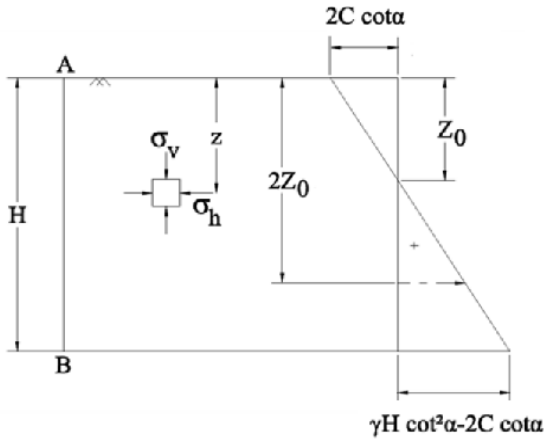

For $0 \le z \le H_1$ $\quad p_a = \gamma z \cot^2\alpha - 2c \cot\alpha$

For $H_1 \le z \le H$ $\quad p_a = [\gamma H_1 \cot^2\alpha + \gamma^1(z - H_1)\cot^2\alpha + \gamma_W(Z - H_1) - 2c\cot\alpha]$

Backfill with surcharge

If the backfill carries a surcharge of intensity q per unit area, then we have, at any depth z,

$p_a = \gamma z \cot^2\alpha + q\cot^2\alpha - 2c \cot\alpha.$

At $z = 0$, $\quad p_a = q\cot^2\alpha - 2c \cot\alpha$

At $z = H$, $\quad p_a = \gamma H\cot^2\alpha + q\cot^2\alpha - 2c \cot\alpha$

3. State the assumptions made in Rankine's earth pressure theory and hence discuss its limitations. (Nov – Dec 2104)

Assumptions:

1. The soil is semiinfinite, homogeneous, dry and cohesionless.
2. The ground surface is a plane which may be horizontal or inclined.
3. The back of the wall is vertical and smooth.
4. The wall yields about the base and thus satisfies the deformation condition for plastic equilibrium.

Limitations

(i) As the retaining walls are usually constructed of masonry or cement concrete, the back of the wall is never smooth, and hence friction develops.
(ii)due to assumption that wall back is smooth, the resultant pressure must act parallel to

the surface but due to frictional forces, the active earth pressure gets inclined in the wall at an angle equal to angle of friction.
(iii) The wall back may not always be vertical. In practice a batter is given to the wall back.
(iv) The retained soil may not be always cohesion-less.

4. The height of a retaining wall with a smooth vertical back is 6m. The cohesionless backfill has a horizontal surface in level with the top of the wall and carries a uniformly distributed surcharge of 30 kPa . The angle of internal friction of the soil is and the water table is at a depth of 3m below the top of fill. Draw the active earth pressure distribution diagram if the unit weight of the soil above the water table is 19 kN / and 19.81 kN/respectively. (Nov – Dec 2104)

Solution:

= 1/3
Pressure at top = 1/3 x 24 = 8 kPa
Pressure at WT = 8+ 1/3 x 19 x 3 = 27 kPa
Pressure at bottom = 8 + 19 + 1/3 x 10 x3 + 9.81 x 3 = 66.43 kPa

Draw pressure distribution diagram.

5. A smooth retaining wall 6m high retains a cohesive soil. The surface is level with the top of the wall and it carries a uniform pressure intensity of 12 kN/.The unit weight of the soil is 16 kN/ The soil has cohesion of 6.5 kN/ and angle of internal friction of 25^0. Determine Rankine's total passive earth pressure acting on the soil. (May - June 2014)

Solution

For $\varphi = 10^0$

$K_p =$ = 2.47

P_p at any depth z is

$P_p = \gamma z K_p + 2c\sqrt{K_p} = \sigma_v K_p 2c\sqrt{K_p}$

At depth z = 0, σ_v = 12 kN/m²

P_p = 12 x 2.47 + 2 x 6.5 √2.47 = 50 kN/m²

At depth z = 6m, σ_v = 12+6x1.6 = 50 kN/m²

P_p = 108 x 2.47 + 2 x 6.5 √2.47 = 287.19 kN/m²

Total passive pressure acting on the wall is

P_p = 50x6+1/2 x 6 (287.19 – 50) = 300 + 711.57 = 1011.57 kN/m length of the wall.

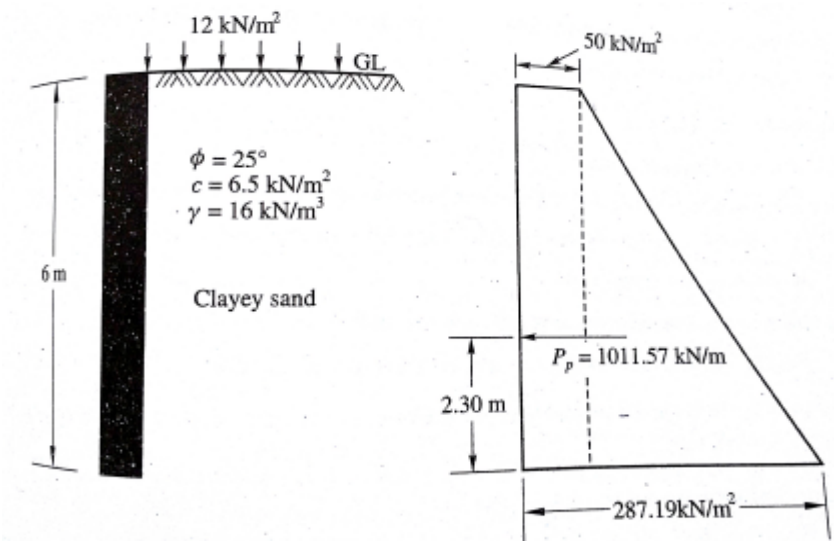

6. Explain the Coulomb's wedge theory of earth pressure with a neat sketch.

(May – June 14)

Instead of considering the equilibrium of an element within the mass of the material, Coulomb (1776) considered of equilibrium of whole of the material supported by a retaining wall when the wall is on the point of moving slightly away from the filling. The wedge theory of earth pressure is based on the concept of a sliding wedge which is torn off from the rest of the backfill on movement of the wall. In the case of active earth pressure, the sliding wedge moves downwards on a slip surface relative to the intact backfill and in the case of passive earth pressure, the sliding wedge moves upwards and inwards. The pressure on the wall is, in fact, a force of reaction which it has to exert to keep the sliding wedge in equilibrium. Factors such as well friction, irregular soil surfaces and different soil strata can easily by taken into account in this method. Following are the basic Assumptions of the wedge theory:

1. The backfill is dry, cohesionless, homogenous, isotopic and elastically under formable but breakable.

2. The slip surface is plane which passes through the heel of the wall.

3. The sliding wedge itself acts as a rigid body and the value of earth pressure is obtained by considering the limiting equilibrium of the sliding wedge as a whole.

4. The position and direction of the resultant earth pressure are known. The resultant pressure acts on the back of the wall at one-third the height of the wall from the base and is inclined at an angle (called the angle of wall friction) to the normal to the back. (The assumption means that the pressure distribution is hydrostatic, i.e., triangular). The back of wall is rough and a relative movement of the wall and the soil on the back takes place which develops frictional forces that influence the direction of the resultant pressure.

The forces acting on a wedge of soil are: its weight W, the reaction R along the plane of sliding and the active thrust Pa against the retaining wall. R will act at an angle to the normal of the plane of sliding. The pressure P is inclined at an angle of wall friction to the normal which is considered positive as marked in Fig. Both R and P will be

inclined in a direction so as to oppose the movement of the wedge. For the condition of the yield of the wall from the backfill the most dangerous or the critical slip surface is that for which the wall reaction is maximum, i.e., the wall must resist the maximum lateral pressure before it moves away from the fill.

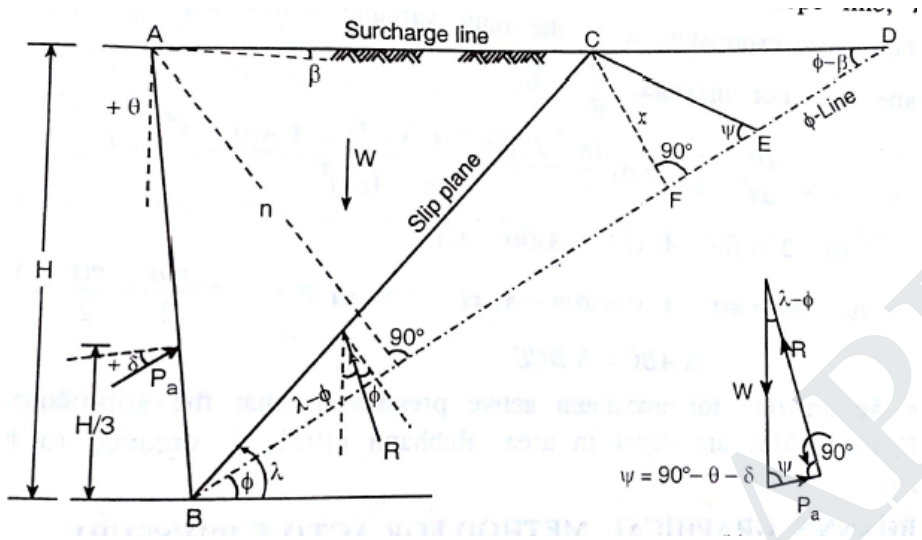

From Force triangle, Pa/W = CE/BE

Pa = W * CE/BE

CE = x cosec ψ = A1x (where A1 = cosec ψ = constant)

BE = BD – (DF – FE)

= m – x(cot(φ – β) – cot ψ)

= m – A2x (where A2= cot(φ – β) – cot ψ = constant)

W = γ (△ ABC)

= γ (ABD-BCD)

= 0.5 γ (m n – mx)

= 0.5 γ m (n –x)

Pa = 0.5 γ m (n –x)[A1x/(m-A2x)]

= 0.5 γ m A1 [(nx-x2)/(m – A2x)]

X is the only variable which depends on the position of the slip plane BC.

For maxima, dPa/ dx = 0

$$0.5\,\gamma\, m\, A1\, \left[\frac{(n-2x)(m-A2x)-(-A2)(nx-x^2)}{(m-A2x)^2} \right] = 0$$

$$(n-2x)(m-A2x) = -A2(nx-x^2)$$

Simplifying, $mn-mx = mx - A2x^2$

$\triangle ABD - \triangle BCD = \triangle BCE$

$\triangle ABC = \triangle BCE$

7. Check the stability of a cantilever retaining wall of smooth vertical back of 6m height and 0.2m thick at top and 0.3m at bottom. The foundation base of retaining wall of depth 0.6m projected on the left side of 0.5m and 2.0m on the right side. It supports a sandy back fill with unit weight 8KN/m² levelled to the top of wall. The angle of internal friction of soil is 34˚. Use Rankine theory. (Nov-Dec 2013)

Solution

$K_a = 0.283$

$P_a = K_a*0.5wh^2$

$= 0.283*0.5*18*6.6^2$

$= 110.95KN$

Stability Conditions:

Load	Magnitude (kN)	Resistance from end to toe slab	Moment about toe (kN/m)
(i) Stem (0.2*6*25)	30	0.7	21.0
(0.5*6*0.1*25)	7.5	0.567	4.25
(ii) Base slab (0.8*0.6*25) [wt earth Back Fill]	42	1.4	58.8
(2*6*18)	216	1.8	388.8
	∑V=295.KN		∑H=472.85KN
Earth pressure P_h	110.95	2	221.9
	∑H=110.95		∑M=221.9

The Factor of Safety

1.33<1.5

So providing shear key.

The Factor of safety against overturning:

FOS= = 2.13 (safe)

$\bar{x}$=

=0.85

=0.55

⇒0.467≯0.56m

Hence not safe.

= 105.5*(1+1.18)

= 229.8KN/m²

= 105.5*(1-1.18)

= 18.99KN/m²

Factor of safety against bearing capacity

q_{nq} = 500KN/m² (Assuming)

F_b == 2.17 (safe)

8. A retaining wall, 4 m high support a back fill (c=20 kN/m²; φ=30°, γ=20 kN/m³) with horizontal top, flush with the top of the wall. The backfill carries a surcharge of 20 kN/m² . If the wall is pushed towards the backfill, compute the total passive pressure on the wall, and its point of application. (Nov – Dec 2012)

Solution

$P_p = ½ \gamma H^2 \tan^2\alpha + 2cH \tan\alpha + qH\tan^2\alpha$

= ½ x 20x4²xtan²60 + 2x20x4xtan60 + 20x4xtan²60

=480 (@ 4/3 m) + 277.13 (@ 4/2 m) + 240 (@4/2 m)

= 997.13kN/m

Z = = 1.68 m from base

9. A retaining wall 6 m high retains sand with φ=30° and unit weight 24 kN/m³ upto a depth of 3 m from top. From 3 m to 6 m, the material is a cohesive soil with c=20 kN/m² and φ=20°. Unit weight of cohesive soil is 18 kN/m³. A uniform surcharge of 100 kN/m² acts on the top of soil. Determine the total lateral pressure acting on the wall and its points of applications. (Nov – Dec 2012)

Solution

Lateral pressure due to top soil

K_{a1} = = 1/3

$P_{a1} = k_{a1}q_1 + k_{a1}\gamma_1 z_1 = 1/3 \times 100 + 1/3 \times 24\, z_1 = 33.33 + 8z_1$

At z_1=0, p_{a1}= 33.33 kN/m²

At z_1=3m, p_{a1}= 57.33 kN/m²

Lateral pressure due to bottom soil

$q_2 = q_1+\gamma_1 H_1 = 172$ kN/m²

$\cot \alpha_2 = 0.7$

$p_{a2} = 8.82\, z_2 + 56.28$

At z=0, p_{a2} =56.28 kN/m²

At z_2= 3m, p_{a2} = 82.74 kN/m²

Total lateral pressure

P_1 = 100 kN/m @ 4.5m from base

P_2 = 36 kN/m @ 4m

P_3 = 168.84 kN/m @ 1.6 m

P_4 = 39.69kN/m @ 1 m

P=344.53 kN/m

Z = = 2.57 m from base

10. A retaining wall is 4m high. Its back is vertical and it has got sand backfill up to its top. The top of the backfill is horizontal and carries a uniform surcharge of 85KN/m². Determine the active pressure on the wall per metre length of wall. Water table is 1m below the top of the fill. Dry unit weight of soil is 18.5KN/m³. Moisture content of soil above water table is 12%. Angle of internal friction of soil is 30. Specific gravity of soil is 2.65. Porosity of backfill is 30%. The wall friction may be neglected. (May – June 2012)

Solution

$P_a = K_a\, q\, H + 0.5\, K_a \gamma_d\, H_1^2 + K_a \gamma H_1\, H_2 + 0.5\, K_a\, \gamma'\, H_2^2 + 0.5 \gamma_w\, H_2^2$

$\gamma = \gamma_d\, (1 + w)$

$= 18.5\, (1+0.12)$

$= 20.72 KN/m^3$

$e = n / (1-n)$

$e = 0.3 / (1-0.3)$

$e = 0.429$

$\gamma_{sat} = ((G + e) \times \gamma_w) / (1+e)$

$= ((2.65 + 0.429) \times 9.81 / (1+0.429)$

$= 21.14 KN/m^3.$

$\gamma' = \gamma_{sat} - \gamma_w$

$= 21.14 - 9.81 = 11.33 KN/m^3.$

$K_a = (1 - \sin 30) / (1 + \sin 30)$

$K_a = 0.33$

$P_a = (0.33 \times 85 \times 4) + (0.5 \times 0.33 \times 18.5 \times 1^2) + (0.33 \times 20.72 \times 1 \times 3) + (0.5 \times 0.33 \times 11.33 \times 3^2)$
$+ (0.5 \times 9.81 \times 3^2)$

$= 196.74 KN/m.$

11. A smooth wall, 6m high retains sand. In the loose state the sand has a void ratio of 0.76 and angle of internal friction of 28, while in the dense state, the corresponding values are 0.48 and 42 respectively. Find the ratio of active and passive earth pressure at the base in the two cases, assuming specific gravity of solids as 2.7. (May – June 2012)

Solution

In loose state:

$K_a = (1-\sin 28) / (1+\sin 28) = 0.36$

$K_p = (1+\sin 28) / (1-\sin 28) = 2.77$

$e = n / (1-n)$

$e = 0.76 / (1 - 0.76) = 3.167$

$\gamma = G\, \gamma_w / (1+e)$

$= (2.7 \times 9.81) / (4.167)$

$= 6.36\ KN/m^2$

$P_a = 0.5\, K_a\, \gamma\, H^2$

$= 0.5 \times 0.36 \times 6.36 \times 6^2$

$= 41.21 KN/m$

$P_p = 0.5\ K_p\ \gamma\ H^2$

$= 0.5 \times 2.77 \times 6.36 \times 6^2$

$= 317.11 KN/m$

$P_a / P_p = 0.13$

In dense state:

Solving similarly, we get

$K_a = 0.19$

$K_p = 5.06$

$e = 0.923$

$\gamma = 13.77 KN/m^2$

$P_a = 47.093 KN/m$

$P_p = 1254.17 KN/m$

$P_a / P_p = 0.038$

12. A 4.5 m high gravity retaining wall that is restrained from yielding retains sand of angle of internal friction of 30 °. The water table is at a depth of 3 m from the top of the backfill. The unit weight of sand above and below water table is 16 kN / m³ and 19.81 kN/ m³ respectively. Find the total force on the wall per unit length. (Nov – Dec11)

Solution

$K_o = 1 - \sin 30 = 0.5$

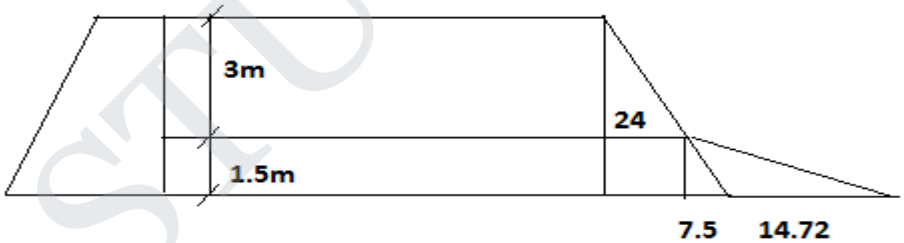

$P = \frac{1}{2} \times 24 \times 3 + 24 \times 1.5 + \frac{1}{2} \times (7.5 + 14.72) \times 1.5$

$= 88.66\ kN / m$

(ii) What are the limitations of Rankine's earth pressure theory? How are these limitations overcome in Coulomb's earth pressure theory?

1. Rankine's theory assumes the wall to be vertical. It is not applicable for inclined wall.

   Overcome by Coulomb which is applicable for inclined wall.

2. Rankine's theory assumes the back of the wall to be smooth and hence over estimates. Overcome by Coulomb, applicable for rough walls also.

3. For Rankine's theory to be applied, the top of backfill is plane.
   But Coulomb's theory can be applied even if the top is not plane.

   In Coulomb's theory, the failure plane is defined.

13. The height of a retaining wall with a smooth vertical beck is 4.5 m. The backfill has a horizontal surface in level with the top of the wall and carries a uniformly distributed surcharge of 20 kPa. The unit weight, angle of internal friction and cohesion are 14 kN/m³, 30 ° and 0 respectively. Determine the magnitude and point of application of the total active thrust per meter width of the wall. If the water table rises to an elevation of 2.0 m below the top of the fill behind the wall, Calculate the magnitude of total active thrust per unit width and locate. Its point of application. Assume the submerged unit weight of the soil as 10.5 kN / m³. (Nov – Dec11)

Solution

CASE I

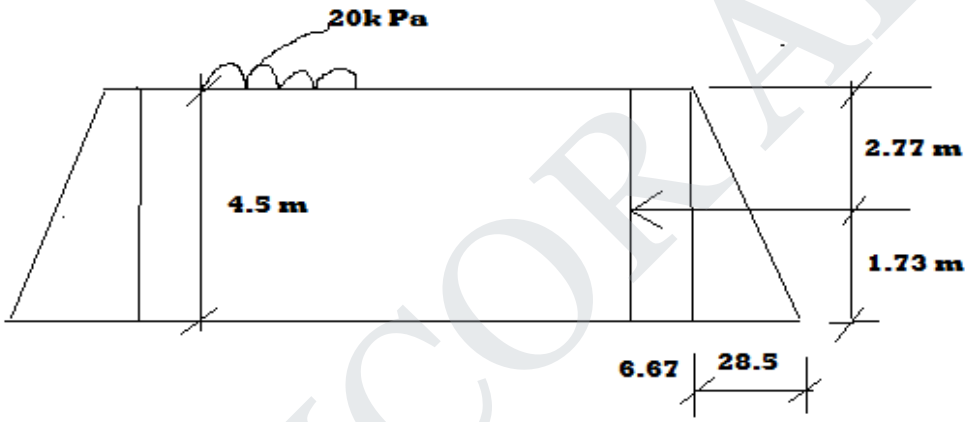

Total thrust = 94 kN / m

ȳ from top = 2.77 m

CASE II

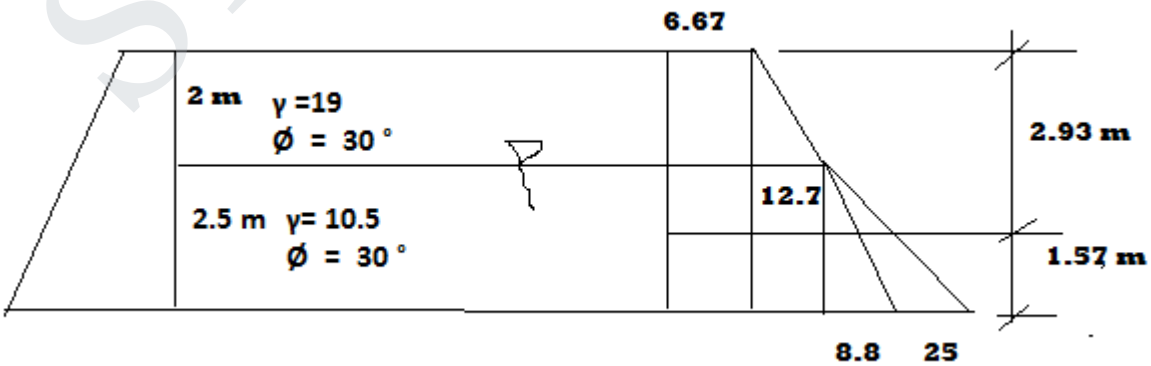

Total thrust = 116.8 kN / m

ȳ from top = 2.93 m

14. A wall 5.4m high, retains sand. In the loose state the sand has void ratio of 0.63 and angle of internal friction is 27^0 while in dense states the corresponding values are 0.36 and 45^0 respectively. Compare the ratio of active and passive earth pressure in the two cases. Assume G = 2.64. (May – June 2011)

Solution

In loose state :

e = 0.63

For $\varphi = 27^0$

$K_p = 1/0.375 = 2.6$

Maximum active pressure $P_a = K_a \gamma_d H = 0.375 \times 15.88 \times 5.4 = 32.15$ kN/m²

Maximum passive pressure $P_p = K_p \gamma_d H = 2.6 \times 15.88 \times 5.4 = 223$ kN/m²

For dense state :

e = 0.36

For $\varphi = 45^0$

$K_p = 1/0.171 = 5.84$

Maximum active pressure $P_a = K_a \gamma_d H = 0.171 \times 19.04 \times 5.4 = 17.58$ kN/m²

Maximum passive pressure $P_p = K_p \gamma_d H = 5.84 \times 19.04 \times 5.4 = 600$ kN/m²

Comment : The comparison of the results indicates that densification of soil decreases the active earth pressure and increases the passive earth pressure. This is advantageous in the sense that active earth pressure is a disturbing force and passive earth pressure is a resisting force.

15. A vertical excavation was made in clay deposit having weight of 20KN/m³. It caved in after the depth of digging reached 4 meters. Taking the angle of internal friction to be zero, calculate the value of cohesion. If the same clay is used as a backfill against a retaining wall, up to a height of 8 meters, calculate

(1) Total active earth pressure
(2) Total passive earth pressure

Assume that the wall yields far enough to allow Rankine deformation condition to establish. (Nov/ Dec 2010)

Solution

$H_c = 4c \tan\alpha / \gamma$

$\alpha=(45+\varphi/2)$

Given: $\Phi=0$

Therefore $\alpha=45$

$4=4c/\gamma \tan 45$

$\gamma=20\ N/mm^2$

C=20

For cohesive soil,

Active pressure intensity = $p_a = \gamma z\cot^2\alpha - 2C\cot\alpha$

$= (20x8\ x\cot^2 45) - (2x20x\ \cot 45) = 120KN/m^2$

Pressure = $P_a = 1/2 \times h \times 120 = 1/2 \times 8 \times 120 = 480KN/m$

Passive pressure: $P_p = \gamma HN\varphi + 2C(N\varphi)^{1/2}$

$= \gamma H \tan^2 45 + 2(20) = 200KN/m^2$

$P_p = 1/2\gamma H^2 N\varphi + 2CH(N\varphi)^{1/2} = 960\ KN/m$

ii) What are the different modes of failure of a retaining wall?

Sliding failure

Overturning failure

Bearing Capacity failure

Tension failure

Shallow Shear failure

Deep shear failure

16. A retaining wall 6m high retains with Ø=30° and unit weight 24kn/m³ upto a depth of 3m from top. From 3m to 6m, the material is a cohesive soil with C=20kN/m² and Ø=20°. Unit weight of cohesive soil is 18kn/m³.a uniform surcharge of 100km/m³ is acting on the top 0f the soil. Determine the total lateral pressure acting on the wall and its point of application. (May – June 2010)

Solution : (*a*) ***Lateral pressure due to top soil***

$$K_{a_1} = \frac{1 - \sin 30°}{1 + \sin 30°} = \frac{1}{3}.$$ Hence at any depth z_1 below top,

$$p_{a_1} = K_{a_1} q_1 + K_{a_1} \gamma_1 z_1 = \frac{1}{3} \times 100 + \frac{1}{3} \times 24\, z_1 = 33.33 + 8\, z_1$$

At $z_1 = 0$, $p_{a1} = 33.33\ kN/m^2$

At $z_1 = 3m$, $p_{a1} = 33.33 + 8 \times 3 = 33.33+24 = 57.33\ kN/m^2$

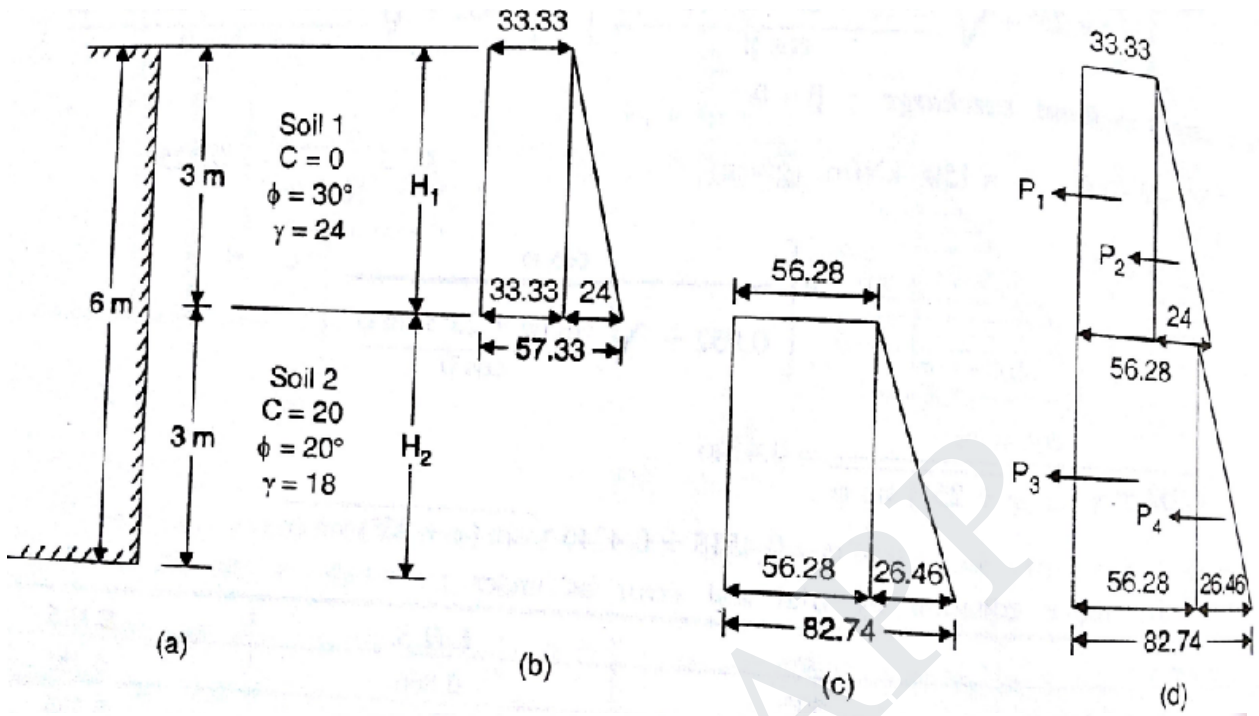

(*b*) ***Lateral pressure due to bottom soil*** : For the bottom soil, the weight of the top soil and the initial surcharge ($q_1 = 100$ kN/m^2) become the surcharge.

$$\therefore \quad q_2 = q_1 + \gamma_1 H_1 = 100 + 24 \times 3 = 172 \text{ kN/m}^2$$

$$\cot \alpha_2 = \cot (45 + \varphi/2) = \cot (45 + 20/2) = 0.7$$

The active earth pressure at any depth z_2 below the junction of the two soils is given by Eq. 20.34 :

$$p_{a2} = \gamma_2 z_2 \cot^2 \alpha_2 - 2c \cot \alpha_2 + q_2 \cot^2 \alpha_2$$

or $$p_{a2} = 18 z_2 (0.7)^2 - 2 \times 20 (0.7) + 172 (0.7)^2$$

or $$p_{a2} = 8.82 z_2 - 28 + 84.28 = 8.82 z_2 + 56.28 \quad \text{...(2)}$$

At $z_2 = 0$, $$p_{a2} = 56.28 \text{ kN/m}^2$$

At $z_2 = 3$ m, $$p_{a2} = 8.82 \times 3 + 56.28 = 26.46 + 56.28 = 82.74 \text{ kN/m}^2$$

The active pressure distribution diagram for bottom soil is given in Fig. 20.38 (*c*)

(*c*) ***Total lateral pressure*** : The lateral pressure diagram for both the soils is shown in Fig. 2038 (*d*) with component diagrams completely marked.

Force $P_1 = 33.33 \times 3 = 100$ kN/m acting at $z_1 = 3 + 3/2 = 4.5$ m above base.

$P_2 = \frac{1}{2} \times 24 \times 3 = 36$ kN/m acting at $z_2 = 3 + 3/3 = 4$ m above base

$P_3 = 56.28 \times 3 = 168.84$ kN/m acting at $z_3 = 3/2 = 1.6$ above base

$P_4 = \frac{1}{2} \times 26.46 \times 3 = 39.69$ kN/m acting at $z_4 = 3/3 = 1$ m above base

$\therefore$ Total $P = 100 + 36 + 168.84 + 39.69 = \mathbf{344.53}$ **kN/m**

Acting at $$\bar{z} = \frac{100 \times 4.5 + 36 \times 4 + 168.84 \times 1.5 + 39.69 \times 1}{344.53} = \mathbf{2.57} \text{ m above base.}$$