SRM VALLIAMMAI ENGINEERING COLLEGE
(An Autonomous Institution)
SRM Nagar, Kattankulathur – 603 203
DEPARTMENT OF CIVIL ENGINEERING

SUBJECTCODE: CE8601 **YEAR:III**

SUBJECT NAME: DESIGN OF STEEL STRUCTURAL ELEMENTS. **SEM:VI**

QUESTION BANK
(As per Anna University 2017 Regulation)

UNIT I – INTRODUCTION

Structural steel types – Mechanical Properties of structural steel- Indian structural steel products. Steps involved in the Design Process -Steel Structural systems and their Elements- Type of Loads on Structures and Load combinations- Code of practices, Loading standards and Specifications - Concept of Allowable Stress Method, and Limit State Design Methods for Steel structures-Relative advantages and Limitations-Strengths and Serviceability Limit states.

Allowable stresses as per IS 800 section 11 -Concepts of Allowable stress design for bending and Shear –Check for Elastic deflection-Calculation of moment carrying capacity –Design of Laterally supported Solid Hot Rolled section beams-Allowable stress design of Angle Tension and Compression Members and estimation of axial load carrying capacity.

Q.NO	PART-A	BT level	Competence
1.	What are the various examples of steel structures?	BT-2	Understand
2.	What are the various types of loads to be considered in steel design?	BT-2	Understand
3.	Mention about the various types of steel sections.	BT-6	Create
4.	Discuss the Stress-Strain curve for structural steel and indicate the salient points	BT-4	Analyze
5.	Discuss the advantages of steel structures.	BT-1	Remember
6.	In what way, the design of steel sections differs with various design philosophy.	BT-2	Understand
7.	How the rolled steel beams are classified?	BT-1	Remember
8.	Summarize the physical properties of structural steel as per IS provisions.	BT-2	Understand
9.	Enumerate the mechanical properties of structural steel.	BT-6	Create
10.	Mention the disadvantages of steel structures.	BT-1	Remember
11.	How are the structural steel classified?	BT-5	Evaluate
12.	List out the combinations of loads to be considered in the design.	BT-4	Analyze
13.	What is meant by ductility?	BT-4	Analyze
14.	Identify the effects of different chemical constituents on steel.	BT-2	Understand
15.	Which type of steel is most commonly used in general construction? Why?	BT-6	Create
16.	Define Poisson's Ratio.	BT-1	Remember

17.	What are the steps involved in structural design?	BT-3	Apply
18.	Define ultimate strength.	BT-2	Understand
19.	Recall the structural steel design philosophies.	BT-1	Remember
20.	Define permissible stresses and Working stresses.	BT-1	Remember
21.	Write short notes on limit state of serviceability.	BT-2	Understand
22.	Yield strength for mild steel specimen was found to be 250N/mm^2. Taking a factor of safety of 2, find out the working stress.	BT-3	Apply
23.	What are the limitations of working stress method?	BT-5	Evaluate
24.	What does the limit state of strength include?	BT-2	Understand
25.	Distinguish between factor of safety and partial safety factor.	BT-4	Analyse

Q.NO	PART-B	BT Level	Competence
1.	Explain the special considerations required in the design of steel structures.	BT-5	Evaluate
2.	Describe about the following a) Design philosophies for structural steel. (7) b) Show the various limit states to be considered in design of steel structures. (6)	BT-1	Remember
3.	Discuss about the following a) Sectional classification and properties of structural steel.(7) b) Factor of safety for loads and materials. (6)	BT-2	Understand
4.	Differentiate and summarize the various methods of fabrications in steel structures.	BT-2	Understand
5.	What are the various types of rolled steel sections manufactured?	BT-1	Remember
6.	Describe about the various mechanical properties involved in the design of structural steel.	BT-2	Understand
7.	List out and explain about the different types of steel.	BT-4	Analyse
8.	(i) What are the advantages of steel as a structural material? (7) (ii) Also mention the disadvantages of steel. (6)	BT-2	Understand
9.	Explain the principles of Working stress, Ultimate load and Limit state design method.	BT-4	Analyse
10.	Determine the design axial load on the column section ISMB 350, given that the height of column is 3.0m & it is pin-ended & braced along minor axis. f_y = 250N/mm^2 , f_u = 410N/mm^2 , E = 2 x 10^5 N/mm^2.	BT-3	Apply
11.	List in detail about the four classes of cross sections of steel as per codal provisions.	BT-2	Understand
12.	Explain the design aspects of tension and compression members with respect to working stress method.	BT-4	Analyse
13.	Write in detail about the working stress design procedure of the members subjected to bending and combined bending and shear.	BT-2	Understand

14.	Determine the design axial load on the column section ISHB 250, given that the height of column is 2.8 m & it is pin-ended & braced along minor axis. f_y = 250N/mm^2 , f_u = 410N/mm^2 , E = 2 x 10^5 N/mm^2.	BT-3	Apply

Q.NO	PART-C	BT Level	Competence
1.	(i) Enumerate with example of the various method of fabrication used in steel structures. (7) (ii) A tie bar 50mm x 80 mm is to carry a load of 80 kN. A specimen of the same quality steel of cross-sectional area 250 mm^2 was tested in the laboratory. The maximum load carried by the specimen was 125kN. Find the ultimate strength and factor of safety. (8)	BT-6	Create
2.	Explain what is structural steel? List out the important properties of such steel.	BT-1	Remember
3.	(i) A column of a building is subjected to the following working (service) loads: Dead load (DL) = 48kN and Live load (LL) = 24kN Determine the factored design load. (3) (ii) The loads on a floor beam of a commercial building are as below, Roof loads: Dead load = 6kN/m^2 Live load = 4kN/m^2 Roof finish = 1.5kN/m^2 Determine the design load for limit state of strength and limit state of serviceability. (12)	BT-4	Analyse
4.	Explain briefly about the various types of loads to be considered in design of steel structures.	BT-1	Remember

UNIT II CONNECTIONS IN STEEL STRUCTURES

Type of Fasteners- Bolts Pins and welds- Types of simple bolted and welded connections Relative advantages and Limitations-Modes of failure-the concept of Shear lag-efficiency of joints- Axially loaded bolted connections for Plates and Angle Members using bearing type bolts –Prying forces and Hanger connection– Design of Slip critical connections with High strength Friction Grip bolts.- Design of joints for combined shear and Tension- Eccentrically Loaded Bolted Bracket Connections- Welds-symbols and specifications- Effective area of welds-Fillet and but Welded connections-Axially Loaded connections for Plate and angle truss members and Eccentrically Loaded bracket connections.

Q.NO	PART-A	BT level	Competence
1.	Define Necking of steel sections.	BT-3	Application
2.	Construct the formula to calculate the efficiency of Bolt joint.	BT-1	Remember
3.	Formulate the equation for calculating the effective throat thickness of weld.	BT-2	Understand
4.	List the types of failures occur in riveted joint?	BT-4	Analyse

5.	Define the term – Pitch of a rivet.	BT-5	Evaluate
6.	Differentiate nominal diameter and gross diameter of bolt.	BT-1	Remember
7.	List the various types of welded joints.	BT-1	Remember
8.	Summarize the advantages of HSFG bolts?	BT-1	Remember
9.	Define the terms gauge, pitch, edge and end distance of bolt joint.	BT-1	Remember
10.	Classify the types of bolts used for structural purposes?	BT-1	Remember
11.	Arrange the double riveted lap joint with neat sketch	BT-1	Remember
12.	Compare and contrast the high tension bolt from common black bolts?	BT-2	Understand
13.	Recommend the minimum pitch and maximum pitch as IS 800-2007.	BT-2	Understand
14.	Compare the advantages of welded connection over bolted connection.	BT-2	Understand
15.	Explain the term slip factor.	BT-2	Understand
16.	Mention the possible modes of failure of bolted connections.	BT-3	Application
17.	In grade 4.6, what do the number 4 and 6 indicates?	BT-3	Application
18.	Differenciate between single cover butt joint and double cover butt joint.	BT-3	Application
19.	Explain with a neat sketch about pitch and gauge distance and mention its parts.	BT-4	Analyse
20.	Draw single and double riveted lap joint.	BT-4	Analyse
21.	Write an expression for shear strength capacity of bolt.	BT-4	Analyse
22.	State the reduction factors for a shear capacity of bolts.	BT-5	Evaluate
23.	Write the use of packing plates.	BT-5	Evaluate
24.	Discuss about prying action.	BT-6	Create
25.	List the minimum and maximum size of weld as per IS 800-2007.	BT-6	Create

Q.NO	PART-B	BT Level	Competence
1.	Two plates 10 mm and 20 mm thick are connected by double cover butt joint made of 8mm cover plate. Record the strength of the joint. If 6 numbers of M20 bolts of grade 4.6 and Fe 415 are used on either sides of the joint in two rows with pitch of 60mm and edge distance of 40mm in both directions.	BT-1	Remember

2.	Calculate the strength of a 16 mm diameter bolt of grade 4.6 for a lap joint .The main plates to be joined are 10 mm thick of FE410 grade .Assume pitch and end distance of a bolt is 40 mm and 30 mm respectively and thread of a bolt is intercepting the shear plane	BT-1	Remember
3.	Two flats (Fe 410 grade steel),each 300mm x 16 mm are to be connected using 20 mm diameter bolts of grade 4.6 to form a lap connected .The connection is supposed to transfer a service load of 375 KN .Calculate number of bolts required for connection with minimum pitch and end distance for bolts. Assume thread of the bolt doesn't intercept shear plane.	BT-1	Remember
4.	Determine the design strength of a 22mm diameter bolt for the cases given below a) Lap joint b) single cover butt joint with 12 mm cover plate c) double cover butt joint with 10 mm cover plates Main plate is 16 mm thick. Use 4.6 grade bolts	BT-1	Remember
5.	Design a double bolted lap joint for a plate of 20mm thickness to carry its full load. a. If the bolts are bearing type b. If the bolts are friction grip type bolts	BT-2	Understand
6.	Calculate the efficiency of the lap joint shown in fig. use M20 bolts of grade 4.6 and Fe 410 plates. 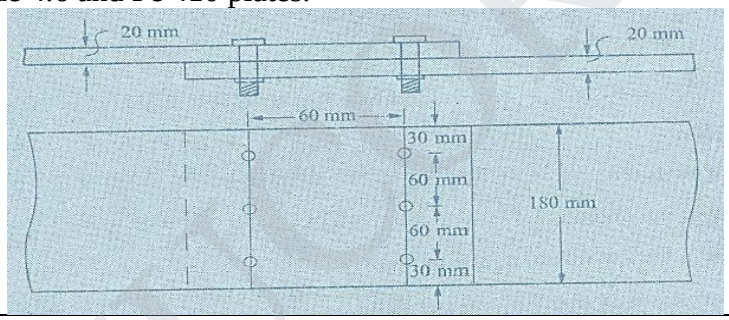	BT-2	Understand
7.	A single bolted double cover butt joint is used to connect two plates 8mmthick. Assuming 20mm bolts at 50mm pitch examine and record the efficiency of the joint. The thickness of cover plate is4mm	BT-2	Understand
8.	Two 16mm thick plates are joined in the workshop by (i) a single U butt weld (ii) a double butt weld .The effective length of weld is 300mm.Design the design strength of welded joint as per IS 800:2007 .The yield and ultimate tensile strength of weld and steel are 250 MPa and 410MPa respectively	BT-3	Application
9.	A tie member of a roof truss consists of 2 ISA 90 x 60 x 10 mm is connected to a 12 mm thick gusset plate on either side and carries a factored pull of 400KN , Design suitable welded connection.	BT-3	Application
10.	A 100mm x 100mm plate is to be welded to another plate 150 mm x 10mm by fillet on three sides .The size of weld is 6mm.Find out the necessary overlap of the plate for full strength of the joint .Take allowable tensile stress in plate equal to 150 MPa and allowable stress in weld as 108 MPa.	BT-3	Application

11.	A bracket bolted to a vertical column is loaded as shown in figure. If M20 bolts of grade 4.6 are used, determine the maximum value of factored load P which can be carried safely. 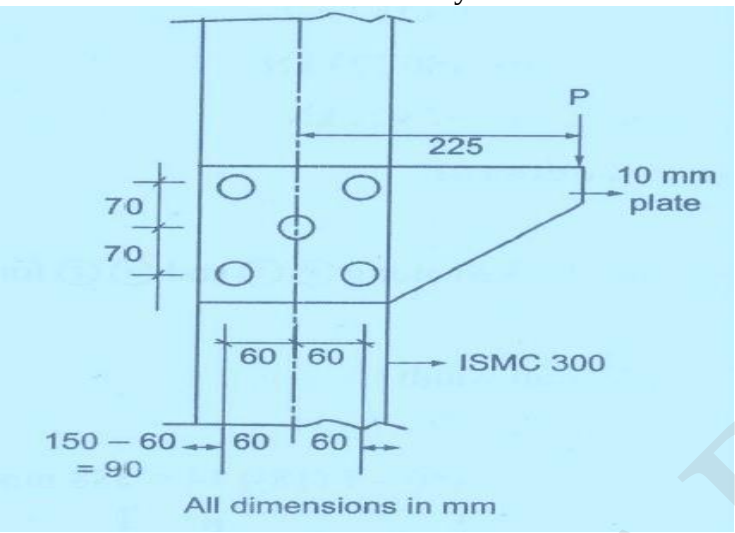	BT-4	Analyse
12.	Design a bracket connection to transfer an end reaction of 200 kN due to factored load as shown in the figure. The end reaction from the girder acts at an eccentricity of 250 mm from the face of the column flange. Design bolted joint connecting the Tee-flange with the column flange. Steel is of grade Fe 410 and bolts of grade 4.6 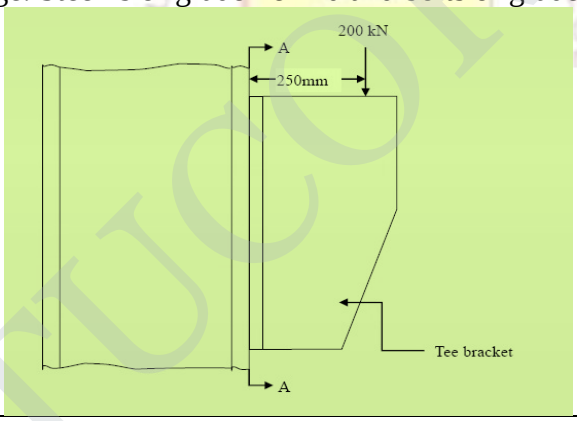	BT-4	Analyse
13.	Design a lap joint between the two plates each of width 120mm, if the thickness of one plate is 16 mm and the other is 12 mm. The joint has to transfer a design load of 160kN. The plates are of Fe 410 grade. Use bearing type plates.	BT-5	Evaluate
14.	Design a butt joint to connect two plates 150 mm x 12 mm using M16 Bolts	BT-6	Create

Q.NO	PART-C	BT Level	Competence
1	A bracket is bolted to the flange of a column as shown. Use 8 mm thick bracket plate and M20 bolts of grade 4.6, Illustrate and design the connection. 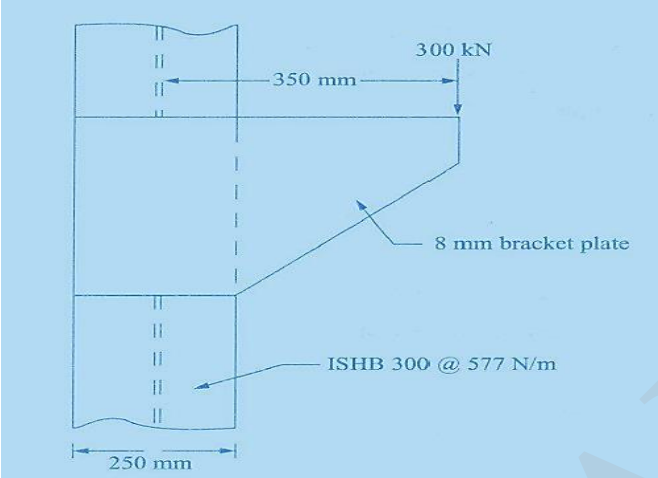	BT-1	Remember
2	Discuss about connection failures with example	BT-2	Understand
3	Why specifications are adopted in Steel structural design ? Suggest some code provision to overcome safe design.	BT-4	Analyse
4	A tie member 75 mm X 8mm is to transmit a load of 90 kN What is the length of the fillet weld and calculate the necessary overlap.	BT-6	Create

UNIT III TENSION MEMBERS

Tension Members - Types of Tension members and sections –Behaviour of Tension Members modes of failure-Slenderness ratio- Net area – Net effective sections for Plates, Angles and Tee in tension – Concepts of Shear Lag- Design of plate and angle tension members-design of built up tension Members-Connections in tension members – Use of lug angles – Design of tension splice.

Q.NO	PART-A	BT level	Competence
1.	Define tension member.	BT-1	Remember
2.	Write the expression for calculating net area for angle section in tension.	BT-5	Evaluate
3.	Write down the limiting slenderness ratio for a tension member.	BT-5	Evaluate
4.	What is Slenderness Ratio?	BT-1	Remember
5.	Formulate to calculate net area in (a) chain bolting (b) zigzag bolting.	BT-2	Understand
6.	Write the formula for the design strength due to yielding of gross section as per IS code.	BT-4	Analyze

7.	Sketch any two typical cross sections of tension member using angle sections with neat sketch.	BT-2	Understand
8.	When gusset plates are used?	BT-1	Remember
9.	Draw the common shapes of tension members.	BT-3	Apply
10.	Investigate the design strength due to block shear.	BT-5	Evaluate
11.	What is the formula for design strength due to rupture of critical section?	BT-2	Understand
12.	Enumerate the factors that is to be considered for the design of Tension members.	BT-6	Create
13.	What do you mean by net effective area?	BT-1	Remember
14.	How the design strength of a tension member is calculated?	BT-2	Understand
15.	Extend the equation for calculating the effective net area for double angle joined back to back.	BT-3	Apply
16.	Write down the types of failure in a tension member.	BT-5	Evaluate
17.	Develop a typical single bolted double cover butt joint and sketch the pitch, gauge and edge distance.	BT-3	Apply
18.	Discuss Tension Splice.	BT-1	Remember
19.	What is the IS specification for force in designing the splice connection.	BT-2	Understand
20.	Sketch the various types of splices that can be provided.	BT-6	Create
21.	Examine lug angle and its use.	BT-4	Analyse
22.	Discuss Shear Lag in Tension member.	BT-3	Apply
23.	Plan two specifications for designing lug angle.	BT-1	Remember
24.	What provision does the lug angle provide in a tension member?	BT-6	Create
25.	Recall the purpose of tension splice.	BT-5	Evaluate

Q.NO	PART-B	BT Level	Competence
1.	Determine the effective net area for the section shown in figure (a) and (b). The angles are connected as shown in the figure. The steel is of grade Fe 410. 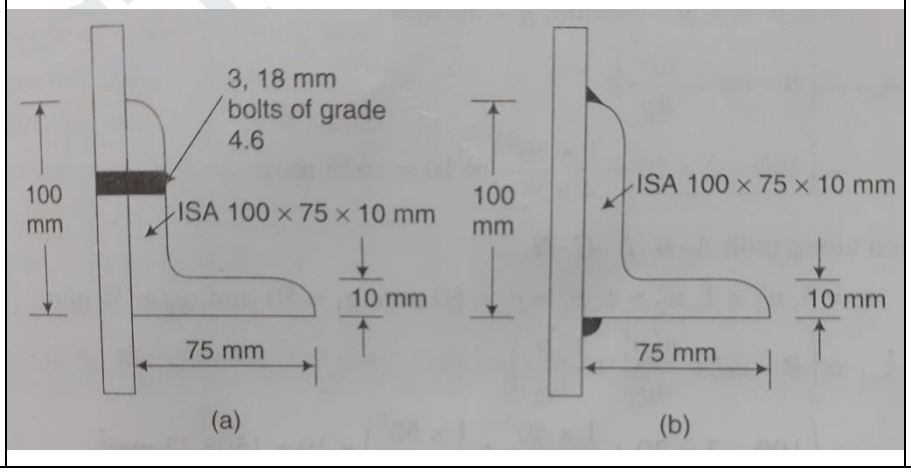	BT-1	Remember

2.	A single unequal angle ISA 200 X 100 X 10 mm is connected to a 12 mm thick gusset plate at the ends with 10 nos. 16 mm diameter black bolts of grade 4.6 arranged in a single row. Determine the design tensile strength of the angle if the gusset plate is connected to 200mm. Pitch = 50 mm End and edge distance = 60 mm.	BT-5	Evaluate
3.	A single unequal angle ISA90x60x6 mm is connected to a 12mm gusset plate at the ends with 4 nos of 16mm bolts to transfer tension as shown. Determine the design tensile strength of the angle if the gusset is connected to 90mmleg. 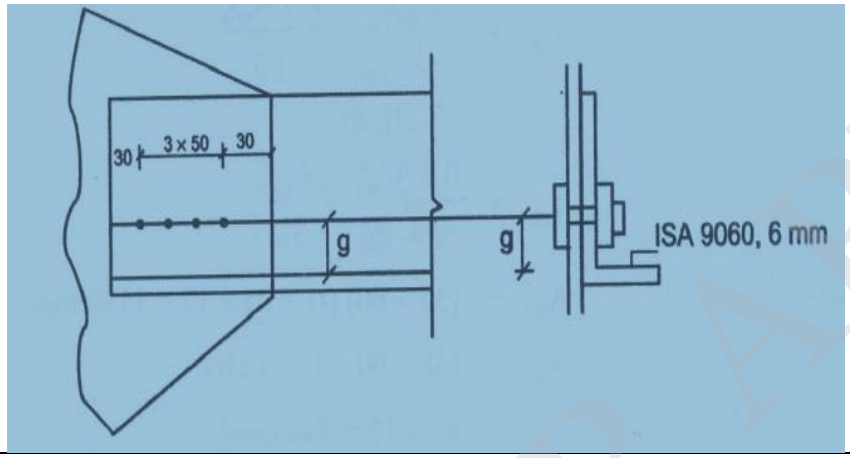	BT-5	Evaluate
4.	Design a single angle to carry a tension of 100 kN. The fillet weld is to be used. f_u = 410 MPa and f_y= 250MPa.	BT-3	Apply
5.	Design a tension member of length 3.6 m to carry a pull of 150 kN. The member is subjected to a reversal of stresses.	BT-1	Remember
6.	Determine the design tensile strength of the plate 130 x 12 mm with the holes for 4 nos. of 16 mm diameter bolts arranged two in a row. Steel used is of Fe 410 grade quality. Pitch = 60 mm and edge distance = 35 mm.	BT-3	Apply
7.	Design a single angle to carry a tension of 100 kN. The end connection is to be done using M20 bolts of 4.6 grade. The yield and ultimate strength of steel used are 250 MPa and 410 MPa respectively.	BT-5	Evaluate
8.	Write the procedure for the design of tension members.	BT-6	Create
9.	Design a 10 m long tension member subjected to a factored tensile load of 2000 kN. The section should consist of 2 channels facing each other. The rolled channels ISMC 300 at 358 N/m only are available. Assuming the channels to be weakened by one bolt hole only, check the adequacy of the section. Use Fe 410 grade of steel. The bolts to be used are of grade 4.6 and of 16 mm diameter.	BT-4	Analyse
10.	Determine the tensile strength of a roof truss member 2 ISA 90x60x6 mm connected to the gusset plate of 8 mm thickness by 4mm weld. The effective length of weld is 200mm.	BT-3	Apply
11.	Find the suitable design for a single angle section for a tension member of a roof truss to carry a factored tensile force of 225KN. The member is subjected to the possible reversal of stress due to	BT-2	Understand

	the action of wind. The effective length of the member is 3m.Use 20mm shop bolts of grade 4.6 for the connection.		
12.	An unequal angle 1.5 m long is connected to a gusset plate. It carries an ultimate tension of 230 kN. Design the section using bolted and 4mm weld connection.	BT-2	Understand
13.	Design a double angle tension member connected on each side of a 10 mm thick gusset plate, to carry an axial factored load of 375kN. Use 20 mm black bolts. Assume shop connection.	BT-6	Create
14.	A tension member of a roof truss carries a factored axial tension of 430kN. Design the section and its connection using lug angle.	BT-4	Analyse

Q.NO	PART-C	BT Level	Competence
1.	Design a bridge truss diagonal subjected to a factored tensile load of 300kN. The length of the diagonal is 3m. The tension member is connected to a gusset plate 16 mm thick with one line of 20 mm diameter bolts of grade 8.8.	BT-5	Evaluate
2.	Determine the tensile capacity of the sections as shown in figure (a) and (b) if, (i) angles are placed on the opposite sides of the gusset plate(tack bolted) (9) (ii) angles are placed on same side of gusset plate(tack bolted) (3) (iii) angles are not tack bolted. (3) 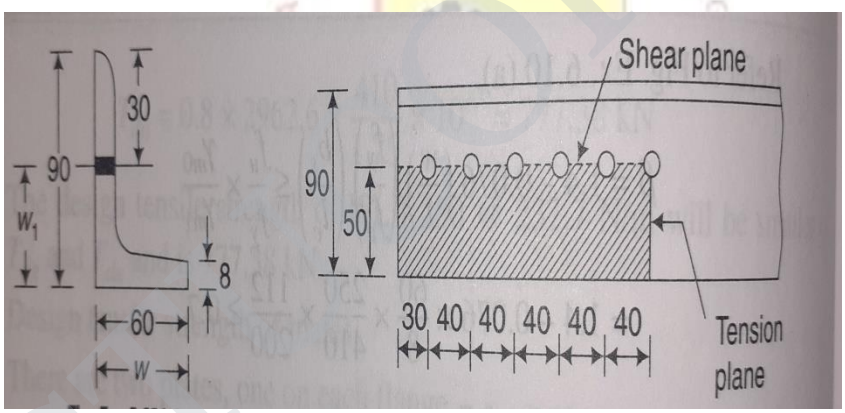	BT-2	Understand
3.	Design a tension splice to connect two plates of size 350x12 mm and 350x20 mm using bolted connections. The factored axial tension is 750kN.	BT-3	Apply
4.	Design an end connection for angle ISA 100x100x10 mm using a lug angle for its full design strength. Use M20 bolts of grade 4.6 and Fe 410 steel.	BT-6	Create

UNIT IV COMPRESSION MEMBERS

Types of compression members and sections–Behaviour and types of failures-Short and slender columns- Current code provisions for compression members- Effective Length, Slenderness ratio – Column formula and column curves- Design of single section and compound Angles-Axially Loaded solid section Columns- Design of Built up Laced and Battened type columns – Design of column bases – Plate and Gusseted bases for Axially loaded colums- Splices for columns.

Q.NO	PART-A	BT level	Competence
1.	Define compression member.	BT-1	Remember
2.	List the various types of compression members?	BT-1	Remember
3.	Distinguish column and strut	BT-2	Understand
4.	Define effective length of a column.	BT-1	Remember
5.	State the uses of providing column base?	BT-1	Remember
6.	Design the various column connections with different sections.	BT-6	Create
7.	Evaluate the effective length of column based on end conditions	BT-5	Evaluate
8.	What do you mean by web buckling?	BT-1	Remember
9.	Discuss the purpose of providing battens in compound steel columns?	BT-2	Understand
10.	Distinguish slab base and gusseted base.	BT-2	Understand
11.	Classify the modes of failure in compression member.	BT-3	Apply
12.	Define buckling load and state the assumptions made in Euler's analysis	BT-1	Remember
13.	Illustrate the lateral systems that are used in compound columns.	BT-4	Analyse
14.	Analyze slenderness ratio and its importance.	BT-4	Analyse
15.	Differentiate between slab base and gusseted base for steel columns	BT-2	Understand
16.	Examine the cause for decrease in permissible stresses due to increase in slenderness ratio	BT-4	Analyse
17.	Why lacings are used in compression members?	BT-3	Apply
18.	Justify the purpose for providing anchors bolt in base plate?	BT-5	Evaluate
19.	Discuss about column splices and its types.	BT-6	Create
20.	Relate local buckling with torsional buckling.	BT-3	Apply
21.	A tubular circular column section is having outer diameter is '√3d' and inner diameter is 'd'. The column is effectively held in position at both ends and unrestrained against rotation at both ends. The effective slenderness ratio of column is 200. Determine the L/d ratio of column	BT-3	Apply
22.	A build up column consists of ISMC 450 channels placed back to back carries factored load of 2500 kN, the single lacing provided with an angle 45^0 with longitudinal axis. Determine the transverse shear as per IS 800:2007	BT-3	Apply
23.	Find the L/d ratio of circular column section having its ends hinged, the effective slenderness ratio is 200.	BT-2	Understand
24.	A strut of a roof truss is composed angle of ISA 60x60x6 mm are	BT-3	Apply

	connected to 10 mm thick gusset plate is subjected to compressive loads resulting wind or earthquake forces. The cross sectional area of each angle is 684 mm^2. Moment of inertia ($I_{zz} = I_{yy}$) is 226000 mm^4, I_{UU} is 360000 mm^4 and I_{VV} is 91000 mm^4. Determine maximum length of strut of a truss as per IS800.		
25.	A column is effectively held in position and restrained in direction at one, other end is held in position but not restrained against rotation. If the actual length is L, find the effective length.	BT-2	Understand

Q.NO	PART-B	BT Level	Competence
1.	A rolled steel beam section HB 350 @ 0.674 kN/m is used as a stanchion. If the unsupported length of the stanchion is 4 m, evaluate safe load carrying capacity of the section.	BT-5	Evaluate
2.	Find the suitable design for a built-up column consisting of two channels connected by batten to carry an axial load of 800 KN; the effective length of the column is 6 m.	BT-1	Remember
3.	Explain the step by step procedure for finding the load carrying capacity of a compression member.	BT-2	Understand
4.	Determine the design axial load on the column section ISMB 400, given that the height of the column is 3.5 m and that it is pin-ended. Also assume the following: fy= 250 N/mm^2, fu=410 N/mm^2; E = 2×10^5 N/mm^2	BT-3	Apply
5.	i) List out the maximum values of effective slenderness ratio for various members as per IS recommendations. (7) ii) Analyse the different failure modes of column in detail (6)	BT-4	Analyse
6.	Design a column using a rolled steel l-section with cover plates to carry a factored axial load of 2000kN. The effective length in both the planes is 5m. Take fy = 250 MPa and E= 200 GPa	BT-1	Remember
7.	Illustrate in detail about column splice and mention its purpose	BT-3	Apply
8.	A column of ISMB 400 is subjected to an axial force of 750kN. Analyse and design suitable base plate. Assume necessary data required.	BT-4	Analyse
9.	Calculate the compressive resistance of a compound column consisting ISMB 500 with one cover plate 350 x 20 mm on each flange and having a length of 5 m. Assume that the bottom of column is fixed and top is rotation fixed, translation free.	BT-1	Remember
10.	A built up column consists ISHB 400@ 77.40 kg/m with one 300mm x 12mmflange plate on each side. The column carries an axial load of 2600kN. Determine the suitable dimension for a gusseted base, if the column is supported on concrete pedestal with a bearing pressure of 5N/mm^2.	BT-1	Remember
11.	Describe about laced column and also explain its design and specifications.	BT-2	Understand

12.	Design a column with single lacing system to carry a factored axial load of 1500kN. The effective height of the column is 4.2m. Use two channels placed toe to toe.	BT-2	Understand
13.	A discontinuous strut of length 4 m consists of two unequal angles ISA 100×75×8 and is connected to a 10 mm thick gusset plate by its longer leg. Determine the strength if it is connected on the: i) Opposite side of the gusset plate (7) ii) Same side of the gusset plate (6)	BT-4	Analyse
14.	Design a suitable slab base for a column section ISHB 400@ 822 N/m. Supporting an axial load 500kN. The base plate is to rest on a concrete pedestal of M20 grade concrete.	BT-6	Create

Q.NO	PART-C	BT Level	Competence
1.	A batten column of 10-m long is carrying a factored load of 1150 kN. The column is restrained in position but not in direction at both ends. Design a built up column using channel sections placed back to back.	BT-1	Remember
2.	A built up column consists of ISHB 400 @ 77.4 kg/m with one 300 mm x 12 mm flange plate on each side. The column carries an axial load of 2600 kN. Design a gusseted base if the column is supported on concrete pedestal with a bearing pressure of 5 N/ mm^2.	BT-4	Analyse
3.	Find the suitable design for a laced column for an axial load of 1200kN with an effective span of 7.5m has one end fixed and other end hinged. Use channels for main members and an angle for lacing	BT-2	Understand
4.	A steel column ISHB 400 @ 759.3 N/m is subjected to a factored axial load of 2000 kN. Design a slab base plate for the column. Assume that the bearing surfaces of the column and base plate are machined and the concrete footing is of M20 grade.	BT-3	Apply

UNIT V DESIGN OF FLEXURAL MEMBERS

Types of steel Beam sections- Behaviour of Beams in flexure- Codal Provisions – Classification of cross sections- Flexural Strength and Lateral stability of Beams –Shear Strength-Web Buckling, Crippling and defection of Beams- Design of laterally supported Beams- Design of solid rolled section Beams- Design of Plated beams with cover plates - Design Strength of Laterally unsupported Beams – Design of laterally unsupported rolled section Beams- Purlin in Roof Trusses-Design of Channel and I section Purlins.

Q.NO	PART – A	BT Level	Competence
1.	List the design consideration in design of steel beams.	BT-2	Understand
2.	What is web crippling?	BT-1	Remember
3.	Define laterally restrained beam. Why do compression flanges require lateral support?	BT-1	Remember
4.	What do you mean by curtailment of flanges?	BT-2	Understand
5.	What is meant by girder, joists and purlin?	BT-3	Apply

6.	What is the difference between bending and buckling of a beam member?	BT-4	Analyse
7.	Distinguish web buckling and web crippling?	BT-4	Analyse
8.	What are the classifications in Stiffeners?	BT-1	Remember
9.	Examine the shear resistance of steel beams.	BT-4	Analyse
10.	How can the lateral buckling behaviour is prevented in a beam member?	BT-2	Understand
11.	What is local buckling of a beam member?	BT-1	Remember
12.	State some advantages of plate girders.	BT-1	Remember
13.	What are the various types of stiffeners?	BT-1	Remember
14.	Write the various factors affecting the lateral-torsional buckling strength.	BT-6	Create
15.	What is laterally unsupported beam? Give an example.	BT-1	Remember
16.	Demonstrate the reasons behind splicing in plate girder	BT-3	Apply
17.	Evaluate the economical depth of a plate girder?	BT-5	Evaluate
18.	Write about the Box girders.	BT-3	Apply
19.	Construct the failure mode of laterally unsupported beams	BT-6	Create
20.	What do you mean by castellated beam?	BT-1	Remember
21.	Explain effective sectional area in column design	BT-4	Analyse
22.	Write the formula for calculating the thickness of beam bearing plate.	BT-3	Apply
23.	Discuss about built up beams.	BT-2	Understand
24.	Justify the purpose for providing the bearing stiffener and where it is used?	BT-5	Evaluate
25.	Discuss the elements of the plate girder.	BT-2	Understand

Q.NO	PART – B	BT Level	Competence
1.	Design a simply supported beam of span 5 m to carry a factored UDL of 47 kN/m.	BT-2	Understand
2.	Design a steel beam section for supporting roof of a big hall for the following data and apply usual checks. Assume steel of grade Fe 410. Clear span : 6.5 m End bearings :150 mm c/c spacing of beams : 3 m Imposed load on the beam : 10 kN/m^2 Dead load (inclusive of self weight) : 4kN/m^2 Restriction on beam depth : 375 mm The compression flange of the beam is laterally supported throughout.	BT-4	Analyse

3.	Write short notes on the design of laterally supported beam.	BT-1	Remember
4.	A simply supported steel joist of 4.0 m effective span is laterally supported throughout. It carries a total uniformly distributed load of 40 kN (inclusive of self weight). Design an appropriate section using steel of grade Fe 410.	BT-1	Remember
5.	A simply supported beam of 5 m span carries a UDL of 40 kN/m. In addition, the beam carries a central point load of 50 kN. The beam is laterally supported. Design the section and check for shear.	BT-6	Create
6.	Design a laterally restrained cantilever beam of effective span 2 m carrying a factored load of intensity 400 kN at the free end. Assume a bearing length of 70 mm.	BT-1	Remember
7.	Explain the step by step procedure for design of vertical, intermediate and horizontal stiffeners in a plate girder.	BT-1	Understand
8.	Explain in detail about the design criteria of beams.	BT-2	Understand
9.	Design the purlin for the following specifications Span of the truss = 12 m Pitch = 1/5 of the span. Spacing of truss = 5 m c/c Spacing of purlins = 1.5 m c/c Wind load = 1200 N/m^2 Load from roofing material = 200N/m^2 Use angle section.	BT-3	Apply
10.	Explain in detail about the design procedure of laterally unsupported beams.	BT-2	Understand
11.	Design an angle purlin for the following data by simplified method: Spacing of truss = 3.5 m Spacing of purlins = 1.6 m Weight of A.C. sheets including laps and fixtures = 0.205 kN/m^2 Live load = 0.6 kN/m^2 Wind load = 1 kN/m^2 Inclination of main rafter of truss = 21°	BT-4	Analyse
12.	Determine the design bending moment and shear strength of laterally unsupported beam of section ISMB 300 of span 5m and unsupported laterally only at the ends. Calculate the factored UDL.	BT-4	Analyse
13.	Design a welded plate girder 24m in span and laterally restrained throughout. It has to support a uniform load of 100 kN/m throughout the span exclusive of the self-weight. Design the girder without intermediate stiffeners. Use Fe 410 steel.	BT-3	Apply
14.	Find the moment capacity of the laterally unsupported beam ISMB 300 of effective span 4m.	BT-3	Apply

Q.NO	PART-C	BT Level	Competence
1.	Determine the design bending strength of ISLB 350 at 486 N/m considering the beam to be both laterally supported and laterally unsupported. The design shear force V is less than the design shear strength. The unsupported length of the beam is 3.0 m. Assume the steel of grade Fe 410.	BT-2	Understand
2.	Design a simply supported beam of effective sapn 1.5 m carrying a factored concentrated load of 360 kN at mid span.	BT-3	Apply
3.	Design an I-section for an industrial building to support a galvanized corrugated iron sheet roof.Given: Spacing of the trusses = 5.0 m Spacing of purlin = 1.5 m Inclination of main rafter to horizontal = 30° Weight of galvanized sheets taking into account laps and connecting bolts = $130N/m^2$ Imposed snow load = $1.5kN/m^2$ Wind load = $1.0\ kN/m^2$.	BT-4	Analyse
4.	Design a laterally unsupported beam for the following data. Effective span = 4m Maximum bending moment = 550 kNm Maximum shear force = 200 kN Steel of grade: Fe 410.	BT-3	Apply

BT – ALLOTMENT

S.No	Unit No.		BT1	BT2	BT3	BT4	BT5	BT6	Total Questions
1	Unit-1	Part-A	6	8	2	4	2	3	25
		Part-B	2	6	2	3	1	-	14
		Part-C	2	-	-	1	-	1	4
2	Unit-2	Part-A	7	5	4	4	3	2	25
		Part-B	4	3	3	2	1	1	14
		Part-C	1	1	-	1	-	1	4
3	Unit-3	Part-A	6	5	4	2	5	3	25
		Part-B	2	2	3	2	3	2	14
		Part-C	-	1	1	-	1	1	4
4	Unit-4	Part-A	6	6	6	3	2	2	25
		Part-B	4	3	2	3	1	1	14
		Part-C	1	1	1	1	-	-	4
5	Unit-5	Part-A	8	5	4	4	2	2	25
		Part-B	4	3	3	3	-	1	14
		Part-C	-	1	2	1	-	-	4

PART-A	125
PART-B	70
PART-C	20
TOTAL	215