IMPORTANT TWO MARKS

UNIT – I BIASING OF DISCRETE BJT, JFET & MOSFET

1. What are the transistor parameters that vary with the temperature?

β, I_{CO}, V_{Beo} are the parameters varying with the temperature.

2. What is Bias? What is the need for biasing?

The proper flow of zero signal collector current and the maintenance of proper collector emitter voltage during the passage of signal is know as transistor biasing.

When a transistor is biased properly, it works efficiently and produces no distortion in the output signal and thus operating point can be maintained stable.

3. What do you understand by DC & AC load line?

DC Load Line

It is the line on the output characteristics of a transistor circuit which gives the values of Ic & Vce corresponding to zero signal (or) DC Conditions.

AC Load Line

This is the line on the output characteristics of a transistor circuit which gives the values of Ic & Vce when signal is applied.

4. What is the meant by operating point Q?

The zero signal values of Ic & Vce are known as operating point. It is also called so because the variations of Ic and Vce take place about this point, when the signal is applied.

5. What are the types of biasing?

The different types of biasing are

(i) Fixed bias
(ii) Collector to Base bias (or) Feedback bias
(iii)Self bias (or) Voltage divider bias

6. What are all the factors that affect the stability of the operating point?

The following are the factors that affect the stability of the operating point,

a. Change of β due to replacement of transistors.
b. Thermal variations

7. Define stability factor 'S'?

The stability factor is defined as the rate of change of collector current Ic with respect to the reverse saturation collector current Ico, keeping 'Vbe' and 'β' constant.

$$S = \frac{\Delta I_C}{\Delta I_{CO}}$$

8. What are the disadvantages of collector feedback bias?

The disadvantages of feedback bias are

a. The collector current is high.
b. If AC signal voltage gain feedback into the resistor Re, it will reduce the gain of the amplifier.

9. Why voltage divider bias is commonly used in amplifier circuit?

The voltage divider bias has the following advantages

a. the operating point will be in stable position.
b. The stability will be considerably improved.
c. Ic can be reduced to the collector leakage current I_{CO}.

10.Define the stability factors S' and S'' ?

The Stability factor S' is defined as the rate of change of Ic with V_{BE} keeping I_{CO} and β constant. β

$$S' = \frac{\Delta I_C}{\Delta V_{BE}}$$

The Stability factor S'' is defined as the rate of change of Ic with β keeping V_{BE} and I_{CO} constant.

$$S'' = \frac{\Delta I_C}{\Delta \beta}$$

11.Give the stability factor S for the fixed bias circuit.

The stability factor for the fixed bias circuit is,

$$S = 1 + \beta$$

12.Give the stability factor S for the Collector to base bias circuit.

The stability factor for the Collector to base bias circuit is,

$$S = \frac{1 + \beta}{1 - \beta [Rc/(Rc+Rb)]}$$

13.Give the stability factor S for the Voltage divider bias circuit.

The stability factor for the Voltage divider bias circuit is,

$$S = \frac{1 + \beta}{1 - \beta [Rc/(Rc+Re)]}$$

14. Why fixed bias circuit is not used in practice?

The stability of the fixed bias circuit is very less. Since the stability factor $S = 1+\beta$, β is a large quantity, therefore stability is less. So, it is not used in amplifier circuits.

15. What are all the compensation techniques used for bias stability?

Along with the negative feedback, the following techniques are used for the Q point stability.

a. Diode compensation,
b. Thermistor compensation,
c. Sensistor compensation.

16.Why the input impedance of FET is more than that of a BJT?

The input impendence of FET is more than that of a BJT because the input circuit of FET is reverse biased whereas the input circuit of BJT is forward biased.

17.How FET is known as Voltage variable resistor?

In the region before pinch off, where V_{DS} si small, the drain to source resistance r_d can be controlled by the bias voltage V_{GS}. Therefore FET is useful as voltage variable resistor (VVR) or Voltage dependent Resistor (VDR)

18.List the advantages of Fixed bias method?

The advantages of fixed bias method are,

a. The stability of the operating point is greatly improved when compared with the other circuits.
b. Less cost and simple circuit.

19.How self-bias circuit is used as constant current source?

In the self bias circuit if Ic tends to increase because of I_{CO} has increasing as a result of temperature, the current in R_E increases. As a consequences of the increase in voltage drop across R_E that provides negative feedback, the base current is decreased. Hence constant I_C value is maintained in the self bias circuit

20.What is Thermal runaway?

The continuous increase in collector current due to poor biasing cause the temperature at collector terminal to increase. If no stabilization is done, the collector leakage current also increases. This further increases the temperature. This action becomes cumulative and ultimately the transistor burns out. The self destruction of an unstabilised transistor is known as thermal runaway.

21. What are the consideration factors that are used for the selection of an operating point for an FET amplifier?

The consideration factors are,

a. Output voltage swing,
b. Distortion,
c. Power dissipation,
d. Voltage gain,
e. Drift (or) Drain current.

22.Write the different types of FET biasing circuits.

The FET biasing circuits are classified as,

a. Gate bias,
b. Self bias
c. Voltage divider bias,
d. Current source bias
e. Drain feedback bias
f. Zero bias.

UNIT II
BJT AMPLIFIERS

1. What is AC load line? How is Q point plotted on the AC load line?

The ac load line is a graph that represents all possible combinations of i_c and v_{ce} for a given amplifier. The dc load of an amplifier is different from the ac load. The ac load line is used to give the maximum possible output voltage swing for a given common-emitter amplifier. It will define the maximum possible peak-to-peak output voltage (V_{PP}) from a given amplifier. The ac load line is a straight line drawn from $I_{C\,(max)}$ and $V_{CE\,(max)}$, when an ac signal is applied to the amplifier.

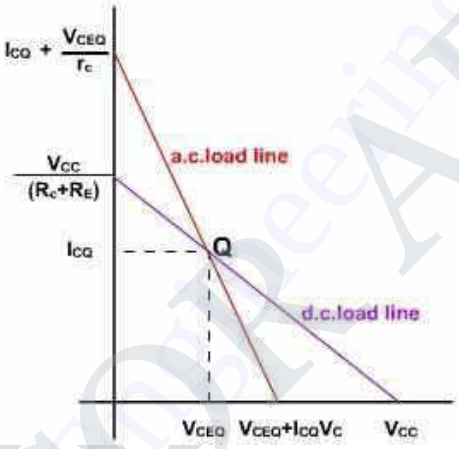

2. Why are common emitter amplifiers more popular?

The common emitter amplifiers are more popular because

a. The CE configuration provides both voltage gain as well as current gain which is greater than unity.

b.Power gain of the CE amplifier is much greater than the other two configurations.

c.The ratio of output resistance to input resistance is small in the range of 10 Ω to 100 Ω which makes the configuration an ideal for coupling between the various transistors.

3. What are the benefits of h-parameters?

Real numbers at audio frequency
Easy to measure
Can be obtained from the transistor state characteristics curves
Convenient to use in circuit analysis and design

4. What are the techniques employed in improving input impedance?

The input impedance of the circuit can be improved by the following two techniques.

- Using direct coupling (Darlington transistor)
- Using bootstrap technique

5. What are the advantages of Darlington connection?

Darlington connection improves input impedance as well as current gain of the circuit.

6. How does the input impedance increase due to connection?

Darlington connection is that the composite t transistors acts as a single unit with a current gain that is the product of the current gain of the individual transistor.

Darlington transistor is commonly used in common emitter follower circuit. This gives an equivalent circuit of two emitter followers in cascade, thereby increasing the input impedance.

The input impedance of single stage amplifier: $R_i = (1 + h_{fe}) R_E$

The input impedance of Darlington connection: $R_i = \frac{(1+h\ )^2}{(1+h\ (1+h\ )\ )}$

7 How are amplifiers classified according to the transistor configuration?

Type of signal	Type of configuration	Type of output obtained from the circuit
Small signal	Common emitter amplifier	Class A amplifier
Large signal amplifiers	Common base amplifier	Class B amplifier
	Common collector amplifier	Class C amplifier
		Class AB amplifier

8 Two identical amplifiers having 10 dB gain each are cascaded. Calculate the output, if the input is of 1 mV (p-p).

$V_o = 10^5 . V_i$

$V_o = 10^5 \times 1 \times 10^{-3}$

$V_o = 100$ V

9. What is the coupling schemes used in multistage amplifiers?

There are three coupling schemes commonly used in multistage amplifiers.

Resistance – Capacitance (RC) Coupling

Transformer coupling

Direct coupling

10 What is a cascade amplifier?

To increases the voltage gain of the amplifier, multiple amplifiers are connected in cascade. The output of one amplifier is the input to another stage. In this way, the overall voltage gain can be increased, when numbers of amplifier stages are used in succession. It is called a multistage amplifier or cascade amplifier.

11 Two amplifiers having gain 20 dB and 40 dB are cascaded. Find the overall gain in dB?

Overall gain in dB = 20 dB + 40 dB = 60 dB

12 What are the characteristics of common emitter amplifier?

Common emitter amplifier has

- Large current gain
- Large voltage gain
- Large power gain
- Voltage phase shift is about 180º
- Moderate input and output impedance

13 What are the characteristics of common collector amplifier?

Common collector amplifier has

- High current gain
- Unity voltage gain
- Large power gain
- No phase difference between input and output
- High input impedance
- Low output impedance

14 What are the characteristics of common base amplifier?

Common collector amplifier has

- Low current gain
- High voltage gain
- High power gain
- No phase difference between input and output
- Low input impedance
- High output impedance

15. State Bisection theorem.

The two half network can be connected using any number of wires but the wires should not cross. Then for such a bisected network at the imaginary line of symmetry with all the connecting wires open. The input impedance at input and output is $Z_{(1/2)OC}$, while with all the connecting wires shorted , the impedance at input and output is $Z_{(1/2)SC}$.

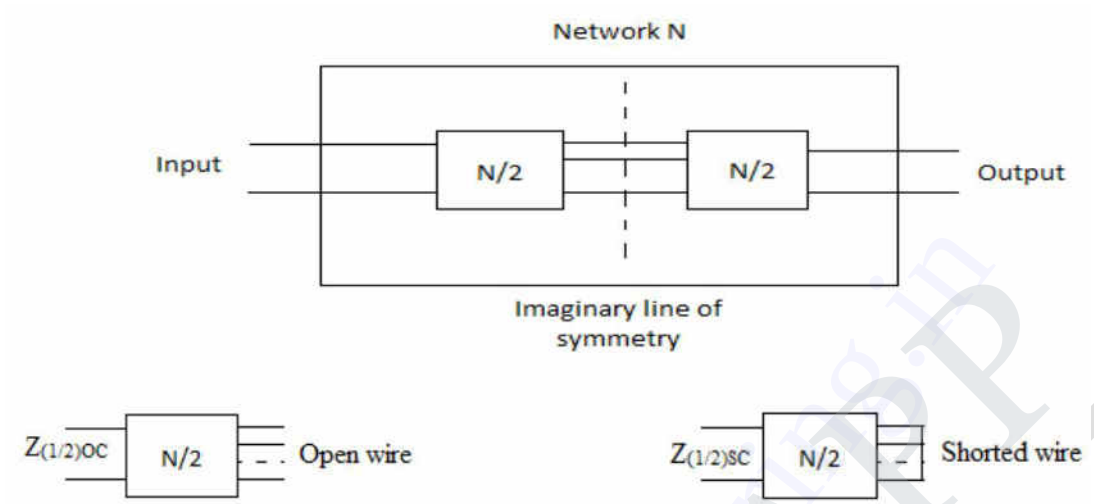

16. Define – CMRR

Common Mode Rejection Ratio/figure of merit is defined as the ability of a differential amplifier to reject a common mode signal.

CMRR is defined as the ratio of the differential mode A_d gain to the common mode gain A_C and is generally expressed in dB.

17. Define – Miller's Theorem

Miller's theorem states that, if an impedance Z is connected between the input and output terminals of a network which provides a voltage gain A_v, an equivalent circuit that gives the same effect can be drawn by removing Z and connecting an impedance Z_i and Z_o

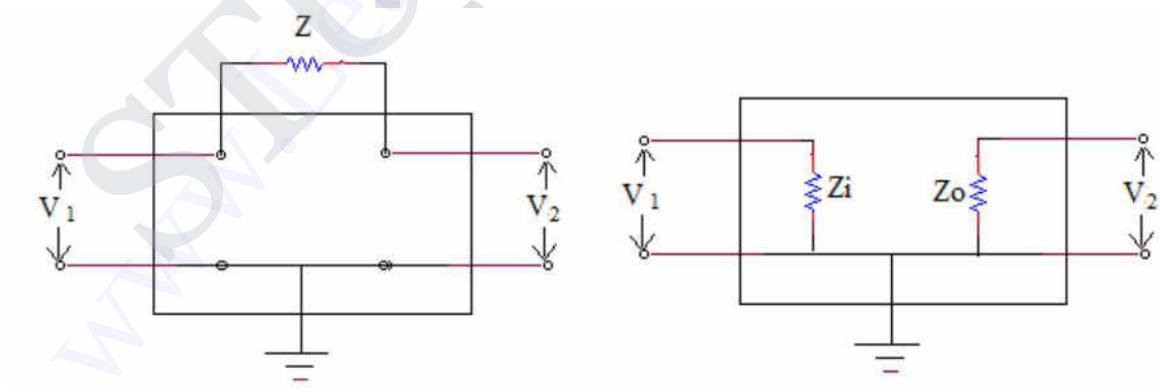

Original Circuit Equivalent circuit using Miller's theorem

18 What is a cascade amplifier?

To increases the voltage gain of the amplifier, multiple amplifiers are connected in cascade. The output of one amplifier is the input to another stage. In this way, the overall

voltage gain can be increased, when numbers of amplifier stages are used in succession. It is called a multistage amplifier or cascade amplifier.

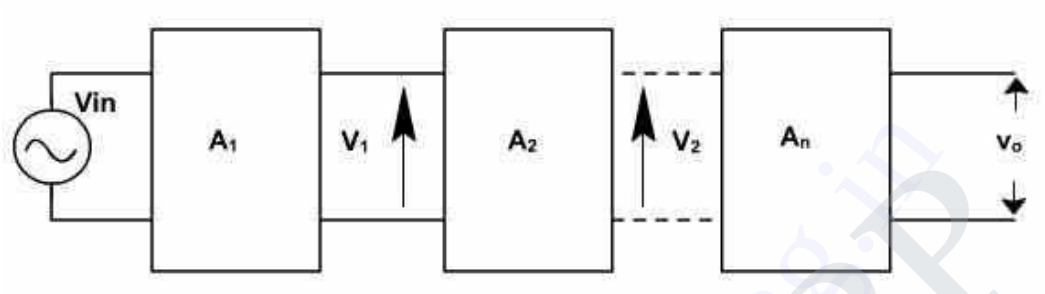

19 What does bootstrapping mean?

The name bootstrap arises from the fact that, if one end of the resistor changes in voltage, the other end of the resistor moves through potential difference, it is as if resistor is pulling itself by bootstrap. The effective load on the bootstrap emitter follower can be given as

20 What are multistage amplifiers?

We need amplifier which can amplify a signal from a very week source such as microphone to a level which is suitable for the operation of another transducer such as loudspeaker. This is achieved by cascading number of amplifier stages known as multistage amplifier.

21 Why transformer coupling is not used in the initial stages of a multistage amplifier?

The transformer coupled amplifiers are not used in the initial stages of a multistage amplifier because it produces unwanted noise. Once these signals are amplified, it cannot be eliminated by other stages. Hence the amplifier performance deteriorates.

22 Mention two advantages which are specific to Darlington connection.

a.The input impedance can be improved with the help of Darlington connection cascaded connection of two emitter followers

b.Current gain of the circuit can be improved by ten times.

UNIT – III SINGLE STAGE FET,MOSFET AMPLIFIERS

1. What is an amplifier?

An amplifier is a circuit, which can be used to increase the amplitude of the input current or voltage at the output by means of energy drawn from an external source.

2.Based on the transistor configuration how amplifiers are classified?

Based on transistor configuration, the amplifier are classified as

a. Common Emitter amplifier
b. Common Collector amplifier
c. Common Base amplifier

3. Draw a CE amplifier & its hybrid equivalent circuit.

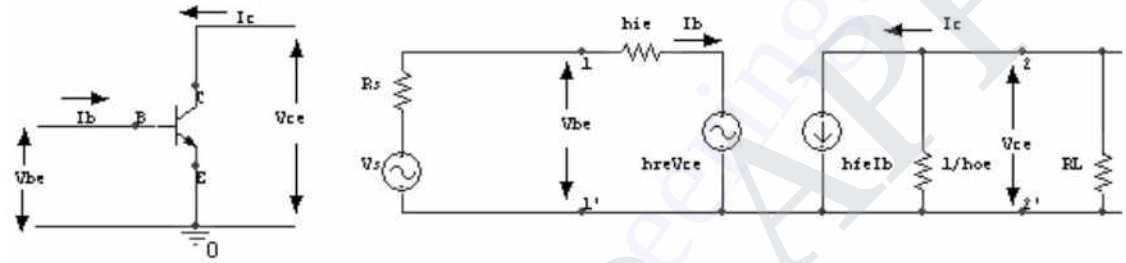

4. Draw a CC amplifier & its hybrid equivalent circuit

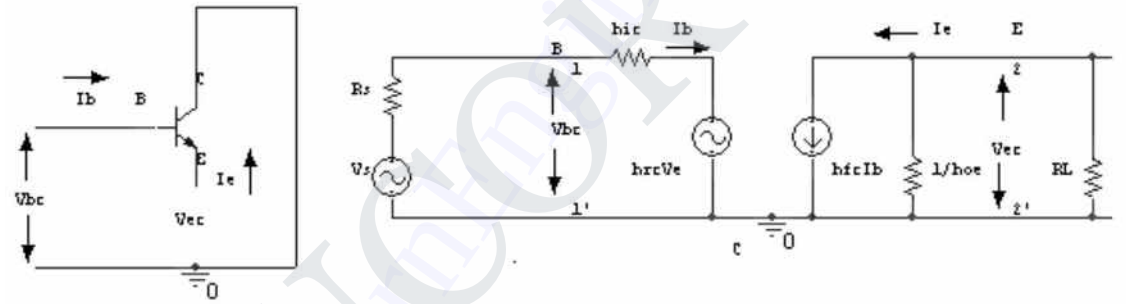

5. Draw a CB amplifier & its hybrid equivalent circuit

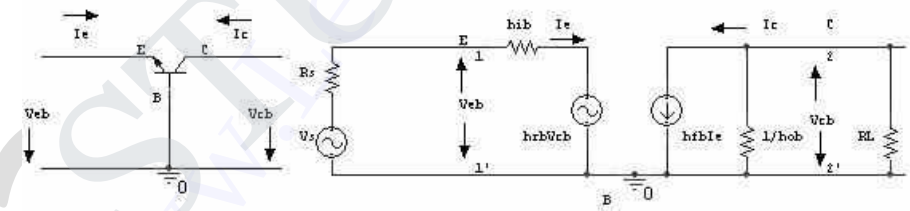

6. Write the Hybrid parameters equation for transistor amplifier?

$V_i = h_i I_i + h_r V_o$
$I_o = h_f I_i + h_o V_o$

7. Write the CE amplifier Current gain, Voltage gain, Input Impedance, Output Impedance in terms of h-parameters.

Current gain	$A_i = -h_{fe}$
Voltage gain	$A_v = (- h_{fe}R_L)/h_{ie}$
Input Impedance	$Z_i = h_{ie}$
Output Impedance	$Z_o = (h_{fe}+R_s)/(h_{oe}R_s + \Delta h)$

8. Write the current amplification factors of the three transistor amplifier configurations.

In a transistor amplifier with AC input signal, the ratio of change in output current to the change in input current is known as the current amplification factor.

9. Which amplifier is called as voltage follower? Why?

The common collector transistor amplifier configuration is called as voltage follower. Since it has unity voltage gain and because of its very high input impedance. It doesn't draw any input current from the signal. So, the input signal is coupled to the output circuit without making any distortion.

11.What are the salient features of hybrid parameters?

The salient features of hybrid parameters are,

a. h parameters are real numbers,
b. They are easy to measure.
c. They are convenient to use in circuit analysis and design
d. Easily convertible from one configuration to other
e. Readily supplied by manufactures.

12. Write the input impedance, output impedance, voltage gain and current gain of the common emitter amplifier in terms of h parameters for the fixed bias condition?

Current gain	$A_i = -h_{fe}$
Voltage gain	$A_v = (h_{fe}R_C)/h_{ie}$
Input Impedance	$Z_i = h_{ie}$
Output Impedance	$Z_o = R_L \| R_C$

13. Define Miller effect in input capacitance?

For any inverting amplifier, the input capacitance will be increased by a miller effect capacitance, sensitive to the gain of the amplifier and the inter electrode capacitance connected between the input and output terminals of the active device.

$C_{Mi} = (1-A_v)C_f$; $C_{Mo}=C_f$

C_f = Inter electrode capacitance between input and output.

14.What is a Darlington connection in the amplifiers?

A Darlington transistor connection provides a transistor having a very large current gain, typically a few thousand. The main features of the Darlington connection is that the composite transistor acts as a single unit with a current gain, that is the product of current gains of the individual transistors.

$\beta D= \beta 1 \beta 2$

β_D = Darlington connection current gain

β_1 and $_2\beta$- Current gain of the transistors 1 & 2 in the Darlington pair

15.Draw the darlington connections using similar transistors

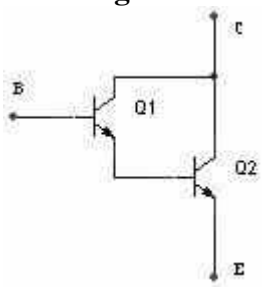

16.Explain Miller's theorem.

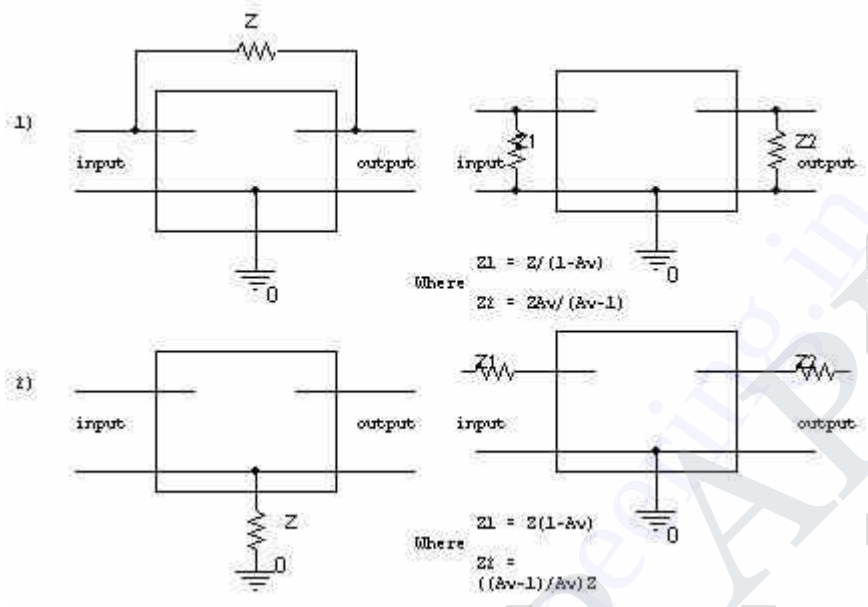

17.What does bootstrapping mean?

In Darlington transistor pair circuits, the input impedance is reduced because of the biasing resistors in the circuit. To overcome this, decrease in the input resistance due to the biasing network, a small capacitor and resistance R_3 are added in the circuit. This improved the input impedance of the darlington pair circuit.

C is added at the input side and R_3 is connected between output and input circuits.

R_{eff} = Effective input resistance.
$R_{eff} = R_3/(1-A_v)$
R_{eff} = Large value
A_v= Voltage gain.

18Why we go for differential amplifier? (or) What is the need of differential amplifier?

The need for differential amplifier arises in many physical measurements, in medical electronics and in direct coupled amplifier applications. In this amplifier, there will be no output voltage resulting from thermal drifts or any other changes provided, changes in both halves of the circuits are equal.

19.Define Common Mode Rejection Ratio CMRR?

Common Mode Rejection Ratio is the figure of merit of a differential amplifier and is given by,

$$CMRR = \frac{\text{Gain of the amplifier for a difference mode input signal}}{\text{Gain of the amplifier for a common mode input signal}}$$

$$C = \left|\frac{A_d}{A_c}\right|$$

20 **What are the advantages of differential amplifier?**

The advantages of differential amplifier are,

a. Very stable
b. Low noise, low drift,

c. Variations in supply voltage, temperature etc., will not change the gain of the amplitude.
d. Does not require any coupling capacitor.
e. Frequency response is better.

21.What are the applications of a differential amplifier?

The applications of a differential amplifier are,

a. To measure many physical quantities,
b. Can be used as a direct coupled amplifier,
c. Used in operational amplifier.

22.What does bootstrapping technique mean?

If one end of the resistor changes in voltage, the other end of the resistor also moves through the same change in voltage. This technique is known as bootstrapping. It is used to increase the input impedance of the darlington pair circuits.

UNIT IV – FREQUENCY RESPONSE OF AMPLIFIERS

1. Define the frequency response of Amplifier?

The frequency response of an amplifier can be defined as the variation of output of quantity with respect to input signal frequency. In otherwise it can be defined as a graph drawn between the input frequency and the gain of an amplifier.

2. Define lower & upper cut off frequencies of an amplifier.

Lower cut-off frequency

The frequency (on lower side) at which the voltage gain of the amplifier is exactly 70.0% of the maximum gain is known as lower cut off frequency.

Upper cut-off frequency

The frequency (on higher side) at which the voltage gain of the amplifier is exactly 70.0% of the maximum gain is known as upper cut off frequency.

3. Define bandwidth?

The range of frequencies occupied by the signal is known as its bandwidth.

4. State the reason for fall in gain at low frequencies.

The coupling capacitance has very high reactance at low frequency. Therefore it will allow only a small part of signal from one stage to next stage and in addition to that the bypass capacitor cannot bypass or shunt the emitter resistor effectively. As a result of these factors, the voltage gain rolls of at low frequency.

5. State the reason for fall in gain at higher frequencies?

At high frequency the reactance of coupling capacitor is very low. Therefore it behaves like a short circuit. As a result of this the loading effect of the next stage increase which reduces the voltage gain. Hence the voltage gain rolls off at high frequencies.

6. Why the electrolytic capacitor is not used for coupling?

Electrolytic capacitor is a polarized capacitor. So it cannot be used for coupling and also in electrolytic capacitor, the dielectric is not an insulating material but it conducting material which will change the capacitance effect

7.Write a note on effects of coupling capacitor.

a. The coupling capacitor C_o transmits AC Signal. But blocks Dc. This prevents DC interferences between various stages and the shifting of operating point.
b. It prevents the loading effect between adjacent stages.

8. Draw the low frequency simplified h-parameter model of an amplifier with a unbypassed emitter resistor.

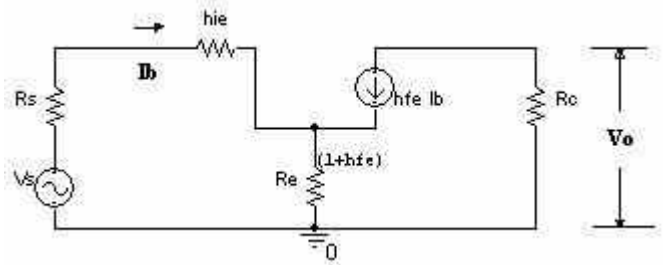

π

9.Why an NPN transistor has a better high frequency response than the PNP transistor?

An NPN transistor has a better frequency response than the PNP transistor because the mobility of electron is more and capacitive effect is less.

10.Write an expression for the bandwidth of multistage amplifier.

The bandwidth of multistage amplifier is $f_2 - f_1 = f_o (2^{1/n}-1)$

11.What is the significance of gain bandwidth product?

It is very helpful in the preliminary design of a multistage wideband amplifier. This can be used to setup a tentative circuit, which is often used for this purpose.

12.Why is the gain bandwidth product a constant?

It is defined as the magnitudes of the product of the mid band gain which is a constant and the bandwidth, which is also a constant. Hence the product of two constants should also be a constant.

13.Why N-channel FET's have a better response than P-channel FET's?

N-channel FET have a better high frequency response than P-channel FET due to the following reason.

b. Mobility of electrons is large in N-channel FET whereas the mobility of holes is poor in P-channel FET.
c. The input noise is less in N-channel FET that that of the P-channel FET.
d. The trans conductance is larger in N-channel FET that that of P-channel Fet.

14.Define f_T and f_β

Unity gain frequency (f_T) or frequency parameter.

It is defined as the frequency at which the common emitter shirt circuit current gain has dropped to unity and is denoted by the symbol (f_T)

Beta cut-off frequency (f_β)

It is defined as the high frequency at which -of a CB transistor drops to 0.707 or 3dB from its lower frequencies

15.What is the need for having a high value of f_T?

Bandwidth of the amplifier is directly proportional to f_T. hence tp have larger bandwidth, the value of f_T should be high.

16.What is a cascade amplifier?

The cascade configuration is an amplifier stage composed of a direct coupled common emitter / common base combination. This offers the possibility of a very large bandwidth.

17. Why are h-parameters not used at high frequencies?

The h-parameters are not used at high frequencies, because the values of h-parameters are not constant at high frequencies. Therefore, it is necessary to analyze the transistor at each and every frequency, which is impracticable. At high frequencies, h-parameters become complex in nature.

18. How is the high frequency gain of an amplifier limited?

At high frequencies, the coupling and bypass capacitors act as short circuit and does not affect the amplifier frequency. However, at high frequencies, the internal capacitances commonly known as junction capacitances reduce the current gain. At higher frequencies, the reactance of the junction capacitances is low. As frequency increases, the reactance of junction capacitances falls. When these reactance become

small enough, they provide shunting effect as they are in parallel with junctions. This reduces the circuit gain and hence the output voltage.

19. What is the effect of coupling capacitors on the bandwidth of the amplifier?

The reactance of a capacitor is Xc = 1/2πfc. at medium and high frequencies, the factor f makes Xc very small, so that all coupling capacitors behave as short circuits. At low frequencies,Xc increases. This increase in Xc drops the signal voltage across the capacitor and reduces the circuit gain. As signal frequencies decrease, the capacitor's reactance increase, and circuit gain continues to fall, reducing the output voltage.

20.Short circuit common emitter current gain of transistor is 25 at a frequency of 2 MHz, if fβ = 200 kHz, calculate fT and hfe. What is the bandwidth that can be obtained using BJT, if the rise time of a BJT is 40 ns?

Solution: Given Ai = 25 , f = 2MHz , fβ = 200kHz and tr = 40 ns

i) $|A_i| = \frac{h_{fe}}{\sqrt{1+\left(\frac{f}{f_\beta}\right)^2}}$

$$h_{fe} = |A_i| * \sqrt{1+\left(\frac{f}{f_\beta}\right)^2} = 25 * \sqrt{1+\left(\frac{2MHz}{200KHz}\right)^2}$$

$$= 25 * \sqrt{1+10^2} = 25 * 10 = 250$$

ii) $f_T = h_{fe} * f_\beta = 250 * 200kHz = 50\ MHz$

iii) $BW = \frac{0.35}{t_r} = \frac{0.35}{40*10^{-9}} = \frac{0.35}{40*10^{-9}} = 8.75\ MHz$

UNIT V – RECTIFIERS AND POWER SUPPLIES

1.What is a power supply?

Equipment, which converts the alternating waveform from the power lines into an essentially direct voltage, is known as power supply.

2. What are all the subsystems in a power supply?

A power supply consists of following three subsystems.

i. Rectifier.
ii. Filter
iii. Voltage regulator.

3. What is the function of rectifier?

Rectifier is capable of converting a sinusoidal input waveform. Its average value is zero, into a unidirectional waveform, with a non-zero average component.

4. What is rectifier?

Any electrical device which offers a low resistance to the current in one direction but a high resistance to the current in the opposite direction is called a rectifier. The rectifying device is usually a semiconductor diode.

5. What is half – wave rectifier?

The rectifier circuit which converts only the positive half cycle of the AC input voltage input voltage into useful DC output voltage is known as half-wave rectifier.

6. **Write down the average DC voltage across the load in a half-wave rectifier circuit.**

The average DC voltage is given by, $V_{dc} = I_{dc}R_L = V_m/\{ (1+Rf/RL)$

Rf= Diode forward resistance RL= Load resistance

V_m= Maximum amplitude or peak amplitude of the sinusoidal AC input voltage

7. Define ripple factor.

A measure of the purity of the DC output of a rectifier circuit is called the ripple factor 'r' and is defined as,

$$r = \frac{\text{RMS value of AC components of wave}}{\text{Average value of wave}}$$

8. What is meant by peak inverse voltage?

The maximum reverse voltage capability of a diode is known as peak inverse voltage.

9. What is meant by rectifier efficiency?

This is a figure used as a measure of merit to compare rectifiers. The rectifier efficiency is defined as,

$$= \frac{\text{DC power delivered to the load}}{\text{AC input power from transformer secondary}}$$

10.What is full-wave rectifier?

A rectifier circuit, which converts both positive and negative half cycle of the input AC voltage into useful DC voltage, is known as full wave rectifier.

11.Write down the ripple factor and efficiency of the full-wave and half wave rectifier circuits.

Full wave rectifier:

Ripple factor : 0.482
Efficiency : 81.2%

Half wave rectifier:

Ripple factor : 1.21
Efficiency : 40.6%

12.What are all the drawbacks of a full wave rectifier?

The draw \backs of full wave rectifier are,

i. centre tapped transformer is required.
ii. Diodes having twice the PIV rating are necessary in this rectifier.

13.What are all the advantages of bridge rectifier circuit?

The advantages of bridge rectifier circuit are,

i. The transformer utilization factor is high (0.812)
ii. It is suitable for large amount of DC power circuits.
iii. The peak inverse voltage across each diode is the peak V_m only not $2V_m$ as in the case of two diode rectifier.

14.What is the average DC output voltage obtained in the bridge rectifier circuit, and full wave rectifier circuit?

The DC output voltage of the bridge rectifier circuit is given by,

$$V_{dc} = 2V_m / \pi - I_{dc}(2R_f)$$

The DC output voltage of the full wave (two diode) rectifier circuit is given by,

$$V_{dc} = 2V_m / \{ \pi (1+R_f/R_L)\}$$

R_f = Diode forward resistance
R_L=Loadresistance

15. What are all the disadvantages of half wave rectifier?

The disadvantages of half wave rectifier are,

i. Excess ripple (r=1.21)
ii. Low rectification efficiency (40.6%)
iii. Low transformer utilization factor.
iv. DC saturation of transformer secondary winding.

16.Define transformer utilization factor of a rectifier circuit.

The transformer utilization factor TUF is defined as,

$$TUF = \frac{\text{DC power delivered to the load}}{\text{AC rating of the transformer secondary}}$$

17.What is filter circuit?

Filter circuits are used to reduce the rectifier output ripple. Either bypassing the AC output components around the load by a shunt capacitance or limiting this magnitude to a low value in the load by a series inductance or a combination of these two for more efficient circuits achieves this.

18. What are all the different types of filters?

The different types of filters are,

i. Capacitor filter
ii. Series inductor filter

iii. LC filters
    1. Capacitance input filter
    2. Inductance input filter.

iv. RC filters.

19.How ripples are minimized in the capacitor filters?

In these types of filters a high value of capacitor is placed across directly to the load resistor. This capacitor gets charged during the conduction period of the rectifier and when V_m decreases C gets discharged through R_L with a time constant CR_L. The capacitor offers only low impedance of 1/2 f_c. this ripple component of current gets bypassed through 'C'

20.What are all the advantages and disadvantages of capacitor filters?

The advantages of capacitor filters are,

At high loads,

i. Small ripple voltage,
ii. High output voltage. The disadvantages are,
i. Poor regulation.
ii. High peak diode current.

21.Why we go for LC filter?

The simple shunt capacitor filter reduces ripple voltage but increase the current through the diode. This large current may damage the diode. The simple L filter reduces both peak value of output current and output voltage. So we go for LC filters. This LC filters causes enough removal of ripple and restriction on the diode current.