DEPARTMENT OF ELECTRONICS AND COMMUNICATION ENGINEERING

EC8453- LINEAR INTEGRATED CIRCUITS

QUESTION BANK

PREPARED BY

WRITTEN BY PROFESSORS

UNIT I BASICS OF OPERATIONAL AMPLIFIERS

PARTA

1. Mention the advantages of integrated circuits.
*Miniaturisation and hence increased equipment density.
*Cost reduction due to batch processing.
*Increased system reliability due to the elimination of soldered joints.
*Improved functional performance.
*Matched devices.
*Increased operating speeds.
*Reduction in power consumption.
2. Write down the various processes used to fabricate IC's using silicon planar technology.
*Silicon wafer preparation.
* Epitaxial growth
*Oxidation.
*Photolithography.
*Diffusion.
*Ion implantation.
*Isolation.
*Metallisation.
*Assembly processing and packaging.
3. What is the purpose of oxidation?
*SiO_2 is an extremely hard protective coating and is unaffected by almost all reagents.
*By selective etching of SiO_2, diffusion of impurities through carefully defined windows can be accomplished to fabricate various components.
4. Why aluminum is preferred for metallization?
*It is a good conductor.
*it is easy to deposit aluminium films using vacuum deposition.
*It makes good mechanical bonds with silicon.
*It forms a low resistance contact.
5. What are the popular IC packages available?
a. Metal can package.
b. Dual-in-line package.
c. Ceramic flat package.
6. Define an operational amplifier.
An operational amplifier is a direct-coupled, high gain amplifier consisting of one or more differential amplifier. By properly selecting the external components, it can be used to perform a variety of mathematical operations.
7. List out the ideal characteristics, and draw the equivalent diagram of an OP-AMP
* Open loop voltage gain is infinity.
*Input impedance is infinity.
*Output impedance is zero.
*Bandwidth is infinity.
*Zero offset.

8. Define Virtual ground property of an OP-AMP

A virtual ground is a ground which acts like a ground. It may not have physical connection to ground. This property of an ideal op-amp indicates that the inverting and non-inverting terminals of op-amp are at the same potentials. The non-inverting input is grounded for the inverting amplifier circuit. This means that the inverting input of the op-amp is also at ground potential.

9. Draw the voltage follower circuit of an OP-AMP

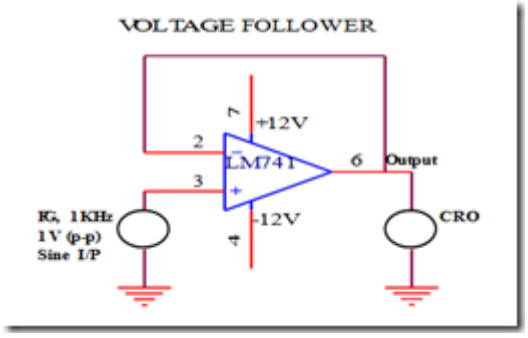

10. Define Input bias current.

Input bias current IB is the average of the currents that flow into the inverting and non-inverting input erminals of the op-amp.

i.e. IB = (IB1+IB2)/2

11. Define Input offset current.

The algebraic difference between the current into the inverting and non-inverting terminals is referred to as input offset current Iio. Mathematically it is represented as $I_{io} = |I_B - I_B|$

Where

I_B+is the current into the non-inverting input terminals.

I_B- is the current into the inverting input terminals.

12. Define Input offset voltage

This is the voltage required to be amplified at the input for making output voltage to zero volts.

13. Define C.M.R.R

The common mode rejection ratio (CMRR) can be defined as the ratio of differential gain to common mode gain.

CMRR = |Ad/Ac|

14. Define P.S.R.R

Power Supply Rejection Ratio (PSRR) is the ability of an amplifier to maintain its output voltage as its

DC power-supply voltage is varied.

PSRR = (change in Vcc)/(change in Vout)

15. Define Slew rate

Slew rate can be defined as the maximum rate of change of output voltage of op-amp with respect to time. It is expressed as S = (dVo / dt) max in V/Sec.

Where slew rate S = 2Π f Vm in V/Sec.

16. Why open loop op-amp configurations is not used in linear applications?

a. The open loop gain of the op-amp is very high. Therefore only the smaller signals having low frequency may be amplified accurately without distortion.

b. Open loop Voltage gain of the op-amp is not a constant voltage gain varies with changes in temperature and power supply as well as mass production techniques. This makes op-amp unsuitable for many linear applications

c. Bandwidth of most open loop op-amps is negligibly small or almost zero therefore op-amp is impractical in ac applications.

17. Determine the slew rate of the op-amp.

Slew rate can be defined as the maximum rate of change of output voltage of op-amp with respect to time. It is expressed as S = (dVo / dt) max in V/Sec.

Where slew rate S = 2Π f Vm in V/Sec.

18. What is active load? Where it is used and why?

In circuit design, an **active load** is a circuit component made up of *active devices*, such as transistors, intended to present a high small-signal impedance yet not requiring a large DC voltage drop, as would occur if a large resistor were used instead. Such large AC load impedances may be desirable, for example, to increase the AC gain of some types of amplifier.

19.Explain thermal drift related to an op-amp.

THERMAL DRIFT: Bias current, offset current and offset voltage change with temperature. A circuit carefully nulled at 25^0C may not remain so when the temperature rises to 35^0C.This is called thermal drift. Often current drift is expressed in nA/^{0}C and offset voltage drift in mV/^{0}C.

20. What is the maximum undistorted amplitude, that a sine wave input of 10 kHz, can produce, at the output of an op-amp whose slew rate is 0.5 V/µs? (Nov/Dec 2012)

Slew rate (SR)= $2\pi f V_p / 10^6$ V/µs

V_p- Maximum amplitude of the output

Given: SR= 0.5 V/µs

f= 10kHz

$V_p = SR \times 10^6 / (2\pi \times 10k) = 1.99$ V

21.Mention the significance of R_{comp} in an op-amp.

For 741 op-amp, with a 1MΩ feedback resistor, V_o = 500nA x 1MΩ = 500mV

The output is driven to 500mV with zero input because of bias currents. This effect can be compensated by adding a compensating resistor between the non-inverting input terminal and ground.

PART B & C

1.Describe the DC performance characteristics of a operational amplifier. (8) **(Nov/Dec 2014)**

2.Describe the AC performance characteristics of a operational amplifier. (8) **(Nov/Dec 2014)**

3.Explain the internal circuit diagram of IC 741. Discuss its AC and DC performance characteristics. (16) **(May/ June 2014)**

4.a)Explain the working of a Wildar current source. (6) **(Nov/Dec 2008), (Nov/Dec 2009)**

b)What is slew rate? |Discuss the methods of improving slew rate. (10) **(Nov/Dec 2008),(May/June 2009), (Nov/Dec 2009)**

5.a)What is an active load? Explain the CE amplifier with active load. (6) **(May/June 2009)**

b)Explain pole-zero compensation (10) **(Nov/Dec 2008)**

6.a)Discuss the frequency compensation in operational amplifier. (8) **(May/June 2009)**

b)What is a current mirror? Give the current mirror circuit analysis. (8) **(Nov/Dec 2009)**

7.Obtain the frequency response of an open-loop op-amp (16) **(Nov/Dec 2013)**

8.Explain the operation of a basic differential amplifier? (16)

9.Derive the transfer characteristics of differential amplifier or sketch the transfer characteristics of dual input differential amplifier showing the linear and limiting regions. Comment on the same. (16)

10.Explain the supply independent biasing technique using VBE as the reference voltage.Also, find the dependence of its output current on temperature. (16)

11.Discuss about the methods of frequency compensation. (16) **(Nov/Dec 20115)**

UNIT II APPLICATIONS OF OPERATIONAL AMPLIFIERS

PART A

1. Give some applications of Comparator.
a. Zero crossing detector b. Window detector
c. Time marker generator d. Phase detector
2. What is a window detector?
A device, usually consisting of a pair of voltage comparators, in which output indicates whether the measured signal is within the voltage range bounded by two different thresholds (an "upper" threshold and a "lower" threshold).
3. List the types of comparators.
Inverting comparator
Non-inverting comparator
4. Differentiate Schmitt trigger and comparator.
A Schmitt trigger is a comparator with a small amount of positive feedback applied to create a hysteresis for the input level.
5. What are the limitations of an ideal active differentiator?
At high frequency, differentiators may become unstable and break into oscillation. The input impedance i.e. ($1/\omega C1$) decreases with increase in frequency, thereby making the circuit sensitive to high frequency noise.
6. State the important features of an instrumentation amplifier.
a. high gain accuracy b. high CMRR
c. high gain stability with low temperature co-efficient d. low dc offset
e. low output impedance
7. How does the precision rectifier differ from the conventional rectifier?
These rectifiers are used to rectify very small voltages or currents for which the diode never gets forward biased in the conventional one. i.e. voltage or currents are always less than .7V which can not be rectified by normal rectifiers.
This rectifier doesn't give any kind of drop in output since diodes are previously biased using op-amp.
8. What are the advantages of active filters over the passive filters?
Active filters use amplifying elements, especially op amps, with resistors and capacitors in their feedback loops, to synthesize the desired filter characteristics. Active filters can have high input impedance, low output impedance, and virtually any arbitrary gain.
They are also usually easier to design than passive filters. Possibly their most important attribute is that they lack inductors, thereby reducing the problems associated with those components.

9. Draw the freq. response of the LPF.

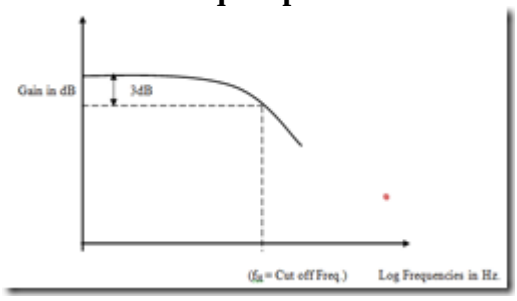

10. What is an antilog amplifier? Draw the circuit of an antilog amplifier.
Antilog amplifier is a decoding circuit to convert a logarithmically encoded signal back to the real signal.

11. What is a V to C convertor?
A transconductance amplifier (gm amplifier) puts out a current proportional to its input voltage.
In network analysis, the transconductance amplifier is defined as a voltage controlled current source (VCCS) .
For direct current, transconductance is defined as follows:

$$g_m = \frac{\Delta I_{out}}{\Delta V_{in}}$$

12. Draw the circuit of an integrator.

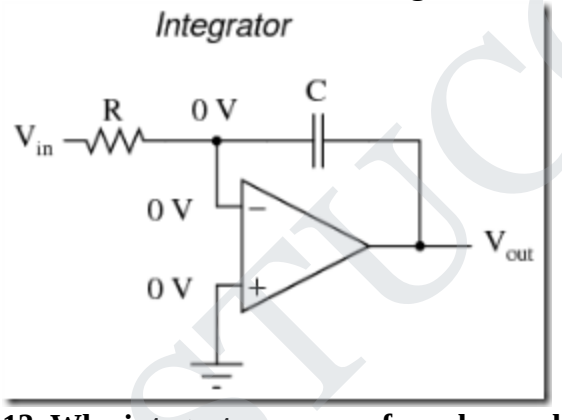

13. Why integrators are preferred over differentiators in analog computers?
Integrators are more linear than the differentiators and the integrators reduce the power consumption than the high pass filter.

Part B & C

1. With neat sketch explain the operation of a 3 op-amp instrumentation amplifier.(16) **(Nov/Dec 2014)**
2. Explain the operation of precision full wave rectifier with neat sketch. (16) **(Nov/Dec 2014)**
3. With a neat circuit, explain the operation of Schmitt trigger. (16) **(Nov/Dec 2008)**
4. With neat diagram explain logarithmic amplifier and antilogarithmic amplifier. (16) **(May/**

June 2014)
5. With neat diagram explain the application of op-amp as precision rectifier, clipper and clamper. (16) **(May/ June 2014)**
6. a) Sketch the basic circuit using op-amp to perform the mathematical operation of differentiation and explain. What are the limitations of an ordinary op-amp differentiator? Draw and explain the circuit of a practical differentiator that will eliminate these limitations. (8) **(May/June 2012)**
7.b) Draw and explain the circuit of a voltage to current converter if the load is (i) floating (4) (ii) Grounded (4) **(May/June 2012)**
8. a) Explain the working of an op-amp based Schmitt trigger circuit? (8) **(May/June 2012),**
b) Design an op-amp based second order active low pass filter with cut off frequency 2KHz. (8) **(May/June 2012)**
9. a) Explain log amplifier. Using log amplifiers construct a multiplier circuit. (8) **(Nov/Dec 2009)**
b) What is an active integrator? Explain the working of an active integrator. (8) **(Nov/Dec 2009)**
10. a) With a neat circuit diagram explain the working of op-amp based sine wave oscillator. (8) **(Nov/Dec 2009)**
b) Design an instrumentation amplifier whose gain can be varied continuously over the range $1 \leq A \leq 1000$. Assume all other relevant details.(8) **(Nov/Dec 2009)**
11.Draw the circuit diagram of op-amp differentiator, integrator and derive an expression for the output in terms of the input. (16)
12.a) Design an op-amp based second order active low pass filter with cut off frequency 2KHz. (8) **(Nov/Dec 2011)**
13.With the help of circuits and necessary equations, explain how log and antilog computations are performed using IC 741. (16) **(Nov/Dec 2014)**
14.Explain in detail about voltage series feedback amplifier. (16)
15.Derive the gain of inverting and non-inverting. (16)
16.Detail the logarithmic and anti logarithmic amplifier? (16)
17.Draw the circuit diagram of a second order Butterworth active low pass filter and derive an expression for its transfer function and explain a second order low pass filter (16)

UNIT III ANALOG MULTIPLIER AND PLL

PART A

1. List out the blocks of PLL.

a. Phase detector/comparator
b. Low pass filter
c. Error amplifier
d. Voltage controlled oscillator

2. Define the following terms related to PLL, a) Capture range

The range of frequencies over which the PLL can acquire lock with an input signal is called the capture range. It

is expressed as a percentage of the VCO free running frequency.

b) Lock range

The range of frequencies over which the PLL can maintain lock with the incoming signal is called the lock-in range or tracking range. It is expressed as a percentage of the VCO free running frequency.

3. Write the expression of a) capture range

b) lock range

Lock in range $\Delta fL = +/- 7.8 fo / V$

fo is free running frequency

Capture range = +/- = $[\Delta fL / (2*\prod*R*C)]$ 1/2

4. Define voltage to frequency conversion factor of VCO.

Voltage to Frequency conversion factor is defined as,

$Kv= \Delta fo / \Delta Vc = 8fo /Vcc$

where, ΔVc is the modulation voltage required to produce the frequency shift Δfo

5. Mention the applications of analog multipliers.

1. Voltage squarer
2. Frequency doubler
3. Voltage divider
4. Square rooter
5. Phase angle detector
6. Rectifier

6. List out the applications of PLL.

a. Frequency multiplication/division
b. Frequency translation c. AM detection
d. FM demodulation
e. FSK demodulation.

7. Define phase transfer conversion coefficient of PLL.

The covertion ratio Kd of phase detector is given by
Kd = Vcc/π

8. Briefly write on frequency synthesizers.

A frequency synthesizer is an electronic system for generating any of a range of frequencies from a single fixed time base or oscillator. They are found in many modern devices, including radio receivers, mobile telephones, radiotelephones, walkie-talkies, CB radios, satellite receivers, GPS systems, etc. A frequency synthesizer can combine frequency multiplication, frequency division, and frequency mixing (the frequency mixing process generates sum and difference frequencies) operations to produce the desired output signal.

9. Explain how a frequency doubler can be realized using analog multiplier.

The multiplication of two sine waves of the same frequency, but of possibly different amplitudes and phase allows doubling a frequency using an analog multiplier.

10. What is a compander IC?

The term companding means compressing and expanding. In a communication system, the audio signal is compressed in the transmitter and expanded in the receiver. Examples: LM 2704- LM 2707; NE 570/571.

11. What is a peak detector?

A peak detector is a series connection of a diode and a capacitor outputting a DC voltage equal to the peak value of the applied AC signal.

12.Draw the pin diagram of IC 565 PLL.

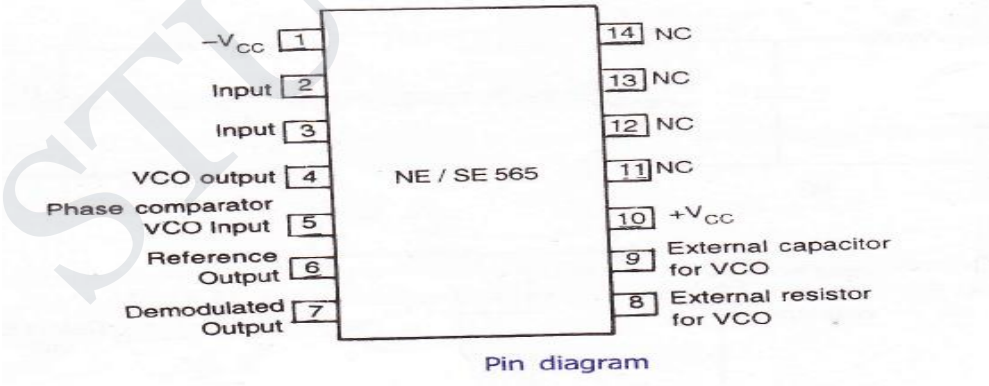

Pin diagram

13.Draw the block schematic of the PLL.

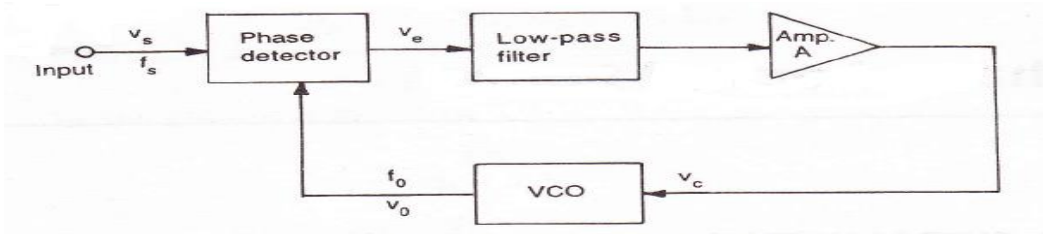

Block schematic of the PLL

14.What does the Ics AD 533 AD 534 refer to ?

The IC AD 533 and IC AD 534 are multiplier ICs by Analog Devices.IC AD 533 is low cost integrated circuit comprising a transconductance multiplying elment, stable reference and an o/p amplifier, on a monolithic silicon chip. IC AD 534 ia a monolithic laser trimmed four quadrant multiplier , having a maximum error of +0.25% or –0.25%.

15. Draw the input frequency versus VCO control voltage characteristics of PLL showing Capture range and lock in range

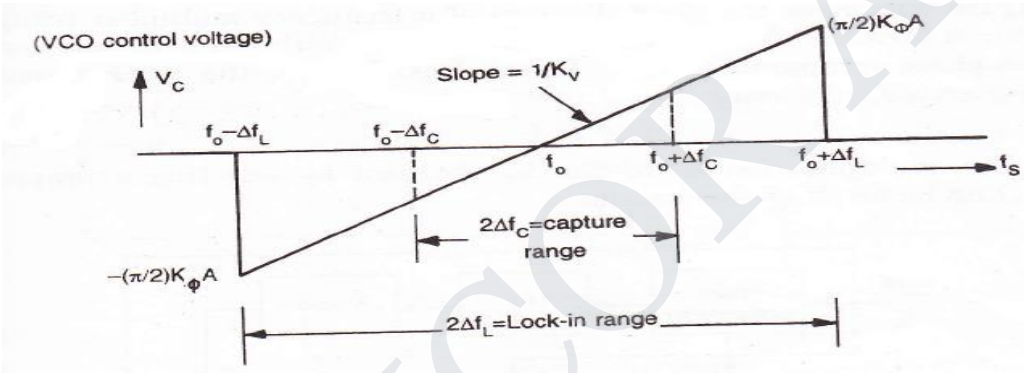

PLL lock-in range and capture range

.

16. A PLL frequency multiplier has an input frequency of "f" and a decade counter is included in the loop. What will be the frequency of the PLL output. (May/June 2013)

Frequency of PLL output is f/10.

17..Draw the transfer characteristics of PLL.

Capture range:

$$f_3 - f_1 = 2\Delta f_C$$

Tracking range:

$$f_2 - f_4 = 2\Delta f_L$$

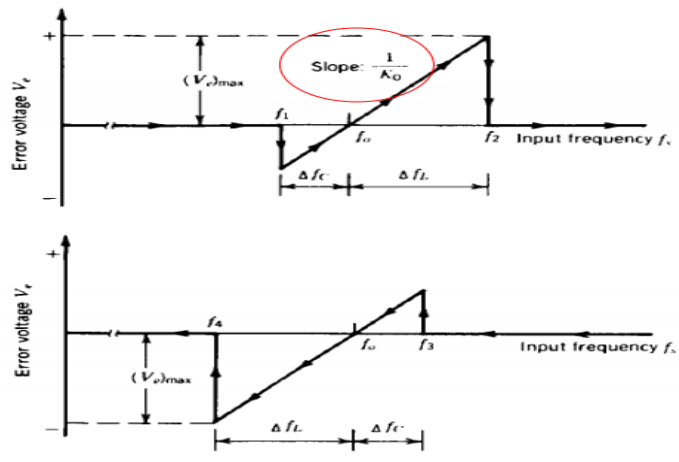

PART B & C

1. Describe the working principle of a analog multiplier using emitter coupled transistor pair. (16) **(Nov/Dec 2014)**
2. a) With neat diagram describe the AM detection using PLL. (8) **(Nov/Dec 2014)**
b) With neat diagram describe the FM detection using PLL. (8) **(Nov/Dec 2014)**
3. a) Explain PLL used as an AM Detection. (8) **(Nov/Dec 2008)**
b) Explain how frequency multiplication is done using PLL. (8) **(Nov/Dec 2008)**
4. a) With a neat sketch, explain the working of variable transconductance multiplier. (10) **(Nov/Dec 2008), (April/May 2010)**
b) Write short notes on frequency synthesizer. (6) **(Nov/Dec 2008), (Nov/Dec 2009)**
5. Explain the working of analog multiplier using emitter coupled transistor pair. Discuss the application of analog multiplier IC. (16) **(May/ June 2014)**
6. Explain the application of PLL as AM detection FM detection and FSK demodulation. (16) **(May/ June 2014)**
7. a) List and define the various performance parameters of a multiplier IC. (6) **(May/June 2012)**
b) How the multiplier is used as voltage divider? (5) **(May/June 2012)** c) How the multiplier is used as frequency doubler? (5) **(May/June 2012)**
8. Explain with neat block diagrams, how PLL is used as (i) AM Detector (5) (ii) FM Detector (5) (iii) Frequency synthesizer (6) **(May/June 2012)**
9. Explain Gilbert multiplier cell. Under what condition the Gilbert multiplier cell work as a modulator. (16) **(Nov/Dec 2009)**
10. a) Explain the working of voltage controlled oscillator.(8) **(Nov/Dec 2009), (April/May 2010)**
11. Explain the working of an instrumentation amplifier with a circuit. Give its characteristics and applications (16)
12. Explain the working of any one of sinusoidal oscillators. (16)
13. Explain the working of Schmitt trigger. (16) **(May/June 2013)**
14. Explain the R-2R ladder type DAC. (16) **(May/June 2016)**
15. Explain how a comparator can be used as a zero crossing detector.(16)
16. Draw the circuit of a first order and second order butter worth active low pass filter and derive its transfer functions. (16)
17.Briefly explain the block diagram of PLL and derive the expression for Lock range and capture range. (16)

11.With a neat functional diagram, explain the operation of VCO. Also derive an expression for f o.(16) **(May/June 2012)**

10. Analyze the Gilbert's four quadrant multiplier cell with a neat circuit diagram. Discuss its applications. (16)

11. With a neat sketch, explain the working of variable transconductance multiplier. (16) **(May/June 2016)**

UNIT IV ANALOG TO DIGITAL AND DIGITAL TO ANALOG CONVERTERS

PART A

1. Explain the operation of basic sample and hold circuit.

A typical sample and hold circuit stores electric charge in a capacitor and contains at least one fast FET switch and at least one operational amplifier. To sample the input signal the switch connects the capacitor to the output of a buffer amplifier. The buffer amplifier charges or discharges the capacitor so that the voltage across the capacitor is practically equal, or proportional to, input voltage. In hold mode the switch disconnects the capacitor from the buffer. The capacitor is invariably discharged by its own leakage currents and useful load currents, which makes the circuit inherently volatile, but the loss of voltage (voltage droop) within a specified hold time remains within an acceptable error margin.

2. State the advantages and applications of sample and hold circuits.

A sample and hold circuit is one which samples an input signal and holds on to its last sampled value until the input is sampled again. This circuit is mainly used in digital interfacing, analog to digital systems, and pulse code modulation systems.

3. List the drawbacks of binary weighted resistor technique of D/A conversion.

a) Wide range of resistor values needed

b) Difficulty in achieving and maintaining accurate ratios over a wide range of variations

4. What is the advantage and disadvantages of flash type ADC?

Flash type ADC is the fastest as well as the most expensive.

The disadvantage is the number of comparators needed almost doubles for each added bit (For a n-bit convertor 2(n-1) comparators, 2n resistors are required).

5. The basic step of a 9 bit DAC is 10.3 mV. If 000000000 represents 0Volts, what is the output for an input of 101101111?

The output voltage for input of 101101111 is

= 10.3 mV (1*28+0*27+1*26+1*25+0*24+1*23+1*22+1*21+1*20)

= 10.3 * 10-3 * 367 = 3.78 V

6. Find the resolution of a 12 bit DAC converter.

Resolution (volts) = VFS/(212-1) = I LSB increment

VFS – Full scale voltage

7. What are the advantages and disadvantages of R-2R ladder DAC.

Advantages:

a) Easier to build accurately as only two precision metal films are required.
b) Number of bits can be expanded by adding more sections of same R/2R values.

Disadvantage:

a) In this type of DAC, when there is a change in the input, changes the current flow in the resistor which causes more power dissipation which creates non-linearity in DAC.

8. Define start of conversion and end of conversion.

Start of Conversion in ADC (SOC): This is the control signal for start of conversion which initiates A/D conversion process.

End of Conversion in ADC (EOC): This is the control signal which is activated when the conversion is completed.

9. What are the types of ADC and DAC.

Types of ADC:

1. Flash (comparator) type converter

2. Counter type converter

3. Tracking or servo converter

4. Successive approximation type converter

Types of DAC:

1. Weighted resistor DAC

2. R-2R Ladder

3. Inverted R-2R Ladder

10. What is the difference between direct ADC and integrating type ADC.

a) The integrating type of ADC's do not need a sample/Hold circuit at the input.

b) It is possible to transmit frequency even in noisy environment or in an isolated form.

11. Define the term Resolution.

The resolution of a converter is the smallest change in voltage which may be produced at the output or input of the converter.

Resolution (in volts)= VFS/2n-1=1 LSB increment. The resolution of an ADC is defined as the smallest change in analog input for a one bit change at the output.

12. Define the term Accuracy.

Absolute accuracy:
It is the maximum deviation between the actual converter output & the ideal converter output.
Relative accuracy:
It is the maximum deviation after gain & offset errors have been removed.
The accuracy of a converter is also specified in form of LSB increments or % of full scale voltage.

13. Define the term Monotonicity.

A monotonic DAC is one whose analog output increases for an increase in digital input.

14.Define the term Conversion time.

It is defined as the total time required to convert an analog signal into its digital output. It depends on the conversion technique used & the propagation delay of circuit components.

The conversion time of a successive approximation type ADC is given by

T(n+1)

where T---clock period

Tc---conversion time n----no. of bits

15.What is multiplying DAC?

A digital to analog converter which uses a varying reference voltage V_R is called a multiplying DAC(MDAC). If the reference voltage of a DAC, V_R is a sine wave give by

V(t)=V_{in}_&RV__ IW

Then, Vo(t)=V_{om}&RV__ IW_____º)

16.What output voltage would be produced by a D/A converter whose output range is 0 to 10V and whose input binary number is 0110 for a 4 bit DAC. (Nov/Dec 2012)

Output voltage= [(Output range)/2^n] x (Decimal equivalent of input binary)

=(10-0)/2^4 x (6) = 3.75

17.What is the drawback of dual slop ADC? (Nov/Dec 2012)

Slow speed, accuracy is dependent on the use of precision external components, high cost.

18.Mention any two specifications of a D/A counter. (May/June 2013)

a. LM741 op-amp
b. Full scale output=5V

19.Give the advantages of R/2R ladder DAC.

Easier to build accurately as only two precision metal film resistors are required.
No. of bits can be expanded by adding more sections of same R/2R values.
In inverted R/2R ladder DAC node voltages remain constant with changing input binary words. This avoids any slow down effects by stray capacitances.

20.List out various resistive DAC techniques available.

Various resistive DAC techniques available:
1. Weighted resistor DAC
2. R-2R ladder
3. Inverter R-2R ladder

21. What is the resolution for a DAC?

The resolution of the analog to digital converter is the smallest change in voltage, which may be produced at the output (or input) of the converter.

22.Name the various types of electronic switches used in DAC.

Various types of electronic switches used in DAC:
1. Single pole double throw switch
2. Totem pole MOSFET switch
3. CMOS inverter switch

PART B & C

1. a) Describe the working of a weighted resistor type DAC. (8) **(Nov/Dec 2014)**
b)Describe the working of a R-2R type DAC. (8) **(Nov/Dec 2014)**
2. With neat sketch explain the working of a flash type ADC. (16) **(Nov/Dec 2014)**
3. a) Explain the working of Dual scope ADC. (8) **(Nov/Dec 2008)**
b) With a neat circuit explain the operation of a binary weighted resistor D/A converter. (8) **(Nov/Dec 2008)**
4. a) Write note on Analog switches.(6)
b) Explain Delta modulation. What are its advantages and disadvantages. (10) **(Nov/Dec 2008)**
5. Explain weighted resistor type and R-2R ladder type DAC. (16) **(May/ June 2014)**
6. Explain Flash type, single slope type and dual slope type ADC. (16) **(May/ June 2014)**
7. a) Explain the following types of electronic switches used in D/A converter with suitable diagrams: (i) Totem pole MOSFET switch(4)
(ii) CMOS inverter as a switch(4) **(May/June 2012)**
b) Explain the working of R-2R ladder DAC by taking example of a 3-bit DAC circuit. Sketch the corresponding equivalence circuits and hence obtain the equation for output. (8) **(May/June 2012)**
8. a) With neat circuit diagram and waveform of output, explain the working of dual slope A/D converter. (10) **(May/June 2012)**
b) Give a table of comparison of Flash, Dual slope and successive-approximation ADCs in terms of parameters like speed, accuracy, resolution, input-hold-time. (6) **(May/June 2012)**
9. a) What is an analog switch? Explain its role in high speed sampling and hold circuits. (8) **(Nov/Dec 2009)**

b) Write short notes on voltage to time converters. (8) **(Nov/Dec 2009)**
10. a) Explain the working of single slope ADC. (8) **(Nov/Dec 2009)**
b) Explain the working of inverted R-2R ladder type D/A converter. (8) **(Nov/Dec 2009), (April/May 2010), (Nov/Dec 2010)**
11. a) Explain the working of success approximation ADC. (8) **(April/May 2010)**
b) What is sample and hold circuit? Briefly explain its construction and application. (8) **(April/May 2010)**

UNIT V WAVEFORM GENERATORS AND SPECIAL FUNCTION ICs

PART A

1. What are the operating modes of a 555 timer?

a. Monostable mode
b. Astable mode

2. List out the applications of 555 timer?

a. Oscillator
b. pulse generator
c. ramp and square wave generator d. mono-shot multivibrator
e. burglar alarm
f. traffic light control.

3. Define sink current and source current?

Sink current: When the output is low, the load current that flows through the load connected between Vcc and o/p terminal is called sink current.

Source current: When the output is high, the load current that flows through the load connected between ground and o/p terminal is called source current.

4. Define normally ON load and normally OFF load?

Normally ON load: The load connected between VCC and output terminal. Normally OFF load: The load connected between output terminal and ground.

5. What is the use of reset pin of 555 timer?
This is an interrupt for the timing device when pin 4 is grounded, it stops the working of device and makes it off.

6. What is the purpose of control voltage pin (5) of 555 timer?
This pin is the inverting input terminal of comparator. This is reference level for comparator with which threshold is compared. If reference level is other than 2/3 VCC, then external input is to be given to pin 5. Pulse width modulation is possible due to pin 5.

7. List out the major blocks of 555 timer functional diagram?

The IC 555 timer combines the following elements.

1) A relaxation oscillator

2) RS flip-flop

3) Two comparators

4) Discharge transistor

8. Define duty cycle?

It is defined as the ratio of on time to the total time of one cycle. D = W/ T

W – time for output is high = TON

T – total time of one cycle.

9. Write the expression for pulse width of 555 timer in monostable mode?

Pulse width W = 1.1 RC seconds

R – resistor in ohms, C – capacitor in farads

10. Write the expression for total time period of 555 timer in astable mode?

T = 0.693 (RA + 2 RB) C seconds

11. What is the frequency of oscillation of free running mode of 555 timer?

F = 1.44/ (RA + 2 RB) C Hz

12. List out the applications of 555 timer in astable mode.

a. missing pulse detector b. Linear ramp generator c. Frequency divider

d. Pulse width modulation.

13. List out the applications of 555 timer in monostable mode.

a. FSK generator

b. Pulse-position modulator

14. Define voltage regulators and give the types?

A voltage regulator is an electronic circuit that provides a stable dc voltage independent of the load current, temperature, and ac line voltage variations.

The classification of voltage regulators:

*Series / Linear regulators

*Switching regulators.

15. What do you mean by linear voltage regulators?

Series or linear regulator uses a power transistor connected in series between the unregulated dc input and the load and it conducts in the linear region .The output voltage is controlled by the continuous voltage drop taking place across the series pass transistor.

16. Define switched voltage regulators?

Switching regulators are those which operate the power transistor as a high frequency on/off switch, so that the power transistor does not conduct current continuously. This gives improved efficiency over series regulators.

17. What are the advantages of adjustable voltage regulators over the fixed voltage regulators?

i) Improved line and load regulation by a factor of 10 or more.

ii) Because of the improved overload protection, greater load current can be drawn.

iii) Improved reliability.

18. List out the parameters related to the fixed voltage regulators?

1) Line regulation

2) Load regulation

3) Ripple rejection

4) Output impedance

5) Maximum power dissipation

6) Rated output current

19. Define dropout voltage of a fixed voltage regulator?

It is the minimum voltage that must exist between input and output terminals. For most of regulators, it is 2 to 3 volts.

20. What is an opto-coupler IC? Give examples.

Opto-coupler IC is a combined package of a photo-emitting device and a photosensing device.

Examples for opto-coupler circuit : LED and a photo diode,

LED and photo transistor, LED and Darlington.

Examples for opto-coupler IC : MCT 2F , MCT 2E .

21. Mention the advantages of opto-couplers.

*Better isolation between the two stages.

*Impedance problem between the stages is eliminated.

*Wide frequency response.

*Easily interfaced with digital circuit.

*Compact and light weight.

*Problems such as noise, transients, contact bounce,.. are eliminated.

22. What is an isolation amplifier?
An isolation amplifier is an amplifier that offers electrical isolation between its input and output terminals.

PART B & C

1. Describe the working of a Astable multivibrator using op-amp. (16) **(Nov/Dec 2014)**
2. Explain the operation of a switching regulator with neat diagram. (16) **(Nov/Dec 2014)**
3. What are the various blocks that form a Basic Voltage Regulator. Explain the series and shunt voltage regulator. List advantages of IC voltage regulators. (16) **(Nov/Dec 2008)**
4. a) Discuss the operation of IC 555 as a monostable multivibrator. Draw the waveform and explain. (8) **(Nov/Dec 2008)**
b) Draw the functional block diagram of switching regulator and explain. (8) **(Nov/Dec 2008)**
5. With neat diagram explain IC 723 general purpose regulator. (16) **(May/ June 2014)**
6. Explain in detail voltage to frequency and frequency to voltage converters. (16) **(May/ June 2014)**
7. Sketch the functional block diagram of the following and explain their working principle:
IC 555 Timer (16) **(May/June 2012)**
8. a) With neat diagram, explain the working principle of isolation amplifier. (8) **(May/June**

2012)

b) With neat diagram, explain the principle of operation of opto-couplers. (8) **(May/June 2012)**

9. a) Explain the function of video amplifier IC. (8) **(Nov/Dec 2009)**

b) With a neat functional block diagram explain switched capacitor filter IC.(8) **(Nov/Dec 2009)**

10. Explain the working of 555 Timer in astable mode. Using the same IC design a circuit to toggle an led with one second delay between on and off time repeatedly (16) **(Nov/Dec 2009)**

11. a) How is voltage regulators classified? Explain a series voltage regulator. (8) **(April/May 2010)**

b) What is an opto-coupler? Briefly explain its characteristics. (8) **(April/May 2010)**

12. Describe the working of IC723 voltage regulator and explain the importance of current limiting techniques. (16) **(Nov/Dec 2010)**

13. Explain i) Oscillation amplifier. ii) Voltage regulator (16)

14. Draw and explain the functional block diagram of a 723 regulator. (16) **(May/June 2012)**

15. Draw the block diagram of the function generator in IC 8038 (or) any other equivalent and explain its operation. (16)

16. Write an explanatory note on opto-couplers. (16) **(April/May 2013)**

17.Write a note on

i)Isolation amplifier.

ii)Audio power amplifier. (16) **(Nov/Dec 2015)**