EASWARI ENGINEERING COLLEGE, RAMAPURAM, CHENNAI-89

Department of Electrical and Electronics Engineering

EE8403-Measurements and Instrumentation

Two Marks with Answers

Unit I Introduction
Part A

1.What are the two major methods of measurements and measurand?
Direct methods, indirect methods.
The physical , chemical,electrical, quantity property process. or a condition to be measured is referred as measurand.

2.What is meant by an instrument?
Instrument is used as a physical means of determining quantities or variables. The instrument serves as an extension of human faculties and enables the man to determine the value of unknown quantity or variable which his unaided human faculties cannot measure. So an instrument in simple case consists of a single unit which gives an output reading or signal according to the unknown variable applied to it.
The measuring instrument may be defined as a device for indicating the value or magnitude of a quantity or variable

3.What is a transfer instrument?
A transfer type instrument is one that may be calibrated with a d.c. source and then used without modification to measure a.c. This requires the transfer type instrument to have same accuracy for both d.c. and a.c.

4.What are the classifications of instruments?
Absolute instruments, Secondary instruments.

5. Enlist the applications of the measurement systems.
Monitoring of processes and operations: They simply indicate the value of condition of parameter under study and their reading do not serve any control functions. (ex.) ammeter, voltmeter, water & electrical energy meters in homes.
Control of processes and operations: A very useful application of instrument is in automatic control systems. In this method, both measurement and control are included.
Experimental Engineering Analysis: For solution of engineering problems, theoretical and experimental methods are available.

6.List the functional elements of the measurement systems.
The three main functional elements of the measurement systems are: Primary sensing element , Variable conversion element, data presentation element

7.What is a variable conversion element?
The output of primary sensing element is to be converted into some other suitable form while preserving the information content of the original signal. For example suppose the output of primary sensing element is in analog form and the next stage of the accepts the input only in digital form and therefore an A/D converter will have to be used for converting the signals from analog to digital form. This conversion element is called variable conversion element.

8. What is an interfering input?
Interfering inputs represent quantities to which an instrument or a measurement system are not desired to respond to interfering inputs but they give an output due to interfering inputs on account of their principle of working, design and many other factors like the environments in which they are placed.

9. What is data presentation element? Give any two examples for data presentation elements.
The information about the quantity under measurement has to be conveyed to the personnel handling the instrument or the system for monitoring, control or analysis to the personnel or to the intelligent measurement system. This function is done by data presentation element.
For indicating: analog and digital indicating instrument (ex) ammeters and voltmeters.
For recording: magnetic tape, high speed camera, TV equipment, storage type CRT, printers, analog and digital computers and microprocessors.

10.What is data manipulation element?

The data manipulation element is to manipulate the signal presented to it preserving the original nature of the signal.

11.What is standard? What are the different types of standards?

A standard is a physical representation of a unit of measurement. The term standard is applied to a piece of equipment having a known measure of physical quantity.

Types of Standards

International Standards (defined based on international agreement)
Primary Standards (maintained by national standards laboratories)
Secondary Standards (used by industrial measurement laboratories)
Working Standards (used in general laboratory)

12.What is unit? Classify them.

The result of measurement of a physical quantity must be defined both in kind and magnitude. The standard measure of each kind of physical quantity is called a unit. They are classified into:
Absolute units, Fundamental and derived units, C.G.S system of units, Practical units, M.K.S system of units, SI units.

13.Write the main static characteristics.

The main static characteristics are:

Accuracy
Sensitivity
Reproducibility
Drift
Static error
Dead zone
Resolution
Precision
Repeatability
Stability

14.Define accuracy in measurements.

It is defined as the closeness with which an instrument reading approaches the true value of the quantity being measured. Accuracy means conformity of truth. The accuracy may be specified in terms of inaccuracy or limits of error and can be expressed in point accuracy or percentage of full scale or percentage of true value.

15.Define precision.

It is a measure of reproducibility of the measurements, i.e., given a fixed value of a quantity, precision is a measure of the degree of agreement with in a group of measurements.

16.Define resolution of an instrument.

If the input is slowly increased from some arbitrary (non-zero) input value, it will again be found that output does not change at all until a certain increment is exceeded. This increment is called resolution or discrimination of the instrument. Thus resolution refers to the smallest measurable input change

17.Define static sensitivity.

It is the ratio of the magnitude of the output signal or response to the magnitude of the output signal or the quantity being measured.

$$\text{Static sensitivity} = \frac{\text{infinitesimal change in output}}{\text{infinitesimal change in input}} = \frac{Dq_0}{Dq_i}$$

18. Define reproducibility.

It is the degree of closeness with which a given value may be repeatedly measured. It may be specified in terms of units for a given period of time.

Define signal to noise ratio.

$$\frac{S}{N} = \frac{\text{signal power}}{\text{noise power}} \quad \frac{(\text{signal of interest expressed in volt})^2}{(\text{unwanted noise expressed in volt})^2}$$

19.Define dead time.

It is the time required by a measurement system to begin to respond to a change in the measurand.

20.Define dead zone.

It is defined as the largest change of input quantity for which there is no output of the instrument.

21.Name two dynamic characteristics of measurement systems.

Speed of response, Measuring lag, Fidelity, Dynamic error

22. Define transfer function.

Transfer function is defined as the ratio of laplace transform output variable to the laplace transform of input variable with zero initial conditions.

23.Define rise time and peak time.

Rise time: it is the time required for the system to rise from 0 to 100 percent of its final value.

Rise time (for 2nd order system) = $t_r = \frac{p \quad \cos^{-1}}{w_n \sqrt{1 - \quad ^2}}$

Peak time: it is the time required for the output to reach the peak of time response or peak overshoot.

Peak time (for 2nd Order system) = $t_p = \frac{p}{w_n \sqrt{1 - \quad ^2}}$

24.What is meant by loading effect?

Under practical conditions, it has been found that introduction of any element in a system results invariably in extraction of energy from the system thereby distorting the original signal. This distortion may take the form of attenuation, waveform distortion or phase shift. The incapability of the system to faithfully to measure, record or control the input signal in undistorted form is called Loading effect.

25.How loading effects measuring instruments can be minimized. Give an example.

Loading effects can be minimized by designing the instrument in such a way that it should not extract any power from the source. Example: When voltmeter is connected across source to measure the voltage drop, its impedance is high enough to avoid the power extraction. When ammeter connected in series with the source to measure the current in the circuit, it should be designed in such a way that its impedance is zero.

26.Define static error in measurements.

Static error is defined as the difference between the measured value and the true value of the quantity under measurement. A = Am -At, Where, A - Absolute static error of quantity, At - true value of quantity, Am - Measured value of quantity.

27.Define measuring lag and fidelity of dynamic characteristics of instruments. (May 2014)

Lag is defined as delay in the response of an instrument to changes in the measured variable.

Fidelity is defined as the degree to which a measurement system indicates changes in the measured quantity with out dynamic error.

28.What is meant by calibration of an instrument?

Calibration of an instrument is important since it affords the opportunity to check the instrument against a known standard and subsequently to find errors and accuracy. Calibration procedure involves a comparison of the particular instrument to be calibrated with either Primary standard or Secondary standard or an instrument of known accuracy.

29.What is the significance of calibration?

It affords an opportunity to check the instrument against a known standard and to find errors and accuracy etc.

30.Distinguish between span and range of an instrument.

Scale range of an instrument is defined as the difference between the largest and the smallest reading of the instrument. (X_{max} of reading)

Scale span=X_{max} - X_{min}

31.Define Hysteresis.

Hysteresis is a phenomenon which depicts different output effects when loading and unloading. It is non coincidence of loading and unloading curves.

32.Give the international standards of instruments.

Defined by International Agreement.

Represent the closest possible accuracy attainable by the current science and technology.

33.Define Gross and Random errors.

Gross Error

cause by human mistakes in reading/using instruments

may also occur due to incorrect adjustment of the instrument and the computational mistakes

cannot be treated mathematically

cannot eliminate but can minimize

Eg: Improper use of an instrument.

This error can be minimized by taking proper care in reading and recording measurement parameter.

In general, indicating instruments change ambient conditions to some extent when connected into

a complete circuit.

Therefore, several readings (at three readings) must be taken to minimize the effect of ambient condition changes.

Random error

- due to unknown causes, occur when all systematic error has accounted
- accumulation of small effect, require at high degree of accuracy
- can be avoid by

(a) increasing number of reading

(b) use statistical means to obtain best approximation of true value

34.Illustrate the difference between accuracy and precision.

Accuracy is defined as the closeness with which an instrument reading approaches the true value of the quantity being measured. Accuracy means conformity of truth. The accuracy may be specified in terms of inaccuracy or limits of error and can be expressed in point accuracy or percentage of full scale or percentage of true value.

Precision is a measure of reproducibility of the measurements, i.e., given a fixed value of a quantity, precision is a measure of the degree of agreement with in a group of measurements.

35.Define limiting errors.

It refers to the largest error in an experiment, causing the greatest inaccuracy in the final measurement. Alternatively, it might be referring to the uncertainty which remains after all experimental error has been eliminated

36.Define linear time invariant and linear time variant systems. Give examples.

An LTI (Linear, Time-Invariant) system, in a simplified sense, will exhibit two behaviors:

- **Time Invariance** - The system must behave the same in any two trials in time if the inputs and starting conditions are identical.
- **Additive Superposition** - If you excite a system with input *a* and get output *A*, then excite it with *b* and get *B*, then when you excite it with input (*a* + *b*), then you should get output (*A* + *B*). eg: RLC circuit

Any linear system represented with the time-dependent operator O(t) demonstrates different properties at least at two different time instances. A system of this type is called linear time-varying (LTV) or time-variant e.g.: Rocket Dynamics

37.Drawthe block diagram of functional elements of the measurement systems.

The three main functional elements of the measurement systems are: • Primary sensing element • Variable conversion element • Data presentation element

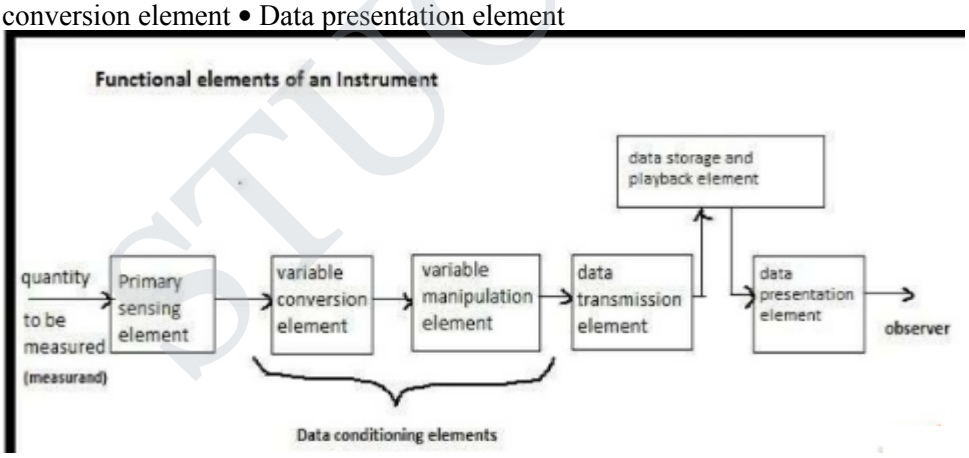

38. Write the different types of systematic errors.

These types of errors are divided into three categories: • Instrument Errors • Environmental Errors • Observational Errors

39.What is standard? What are the different types of standards?

A standard is a physical representation of a unit of measurement. The term standard is applied to a piece of equipment having a known measure of physical quantity. Types of Standards • International Standards (defined based on international agreement) • Primary Standards (maintained by national standards laboratories) • Secondary Standards (used by industrial measurement laboratories) • Working Standards (used in general laboratory)

40.Why must instruments be calibrated?

Calibration of all instruments is important since it affords the opportunity to check the instruments against a known standard and subsequently to find errors and accuracy. Calibration Procedure involve a comparison of the particular instrument with either • a primary standard • a secondary standard with a higher accuracy than the instrument to be calibrated a instrument of known accuracy

41. What is mean by accuracy of an instrument?

It is the closeness with an instrument reading approaches the true value of the quantity being measured.

42.Define static error and Reproducibility.

Static error: Static error is defined as the difference between the true value and the measured value of the quantity. Static error = At – Am Where Am =measured value of quantity At =true value of quantity.

Reproducibility: It is specified in terms of scale readings over a given period of time

43.Define threshold

Threshold is defined as the minimum value of the input at which the output starts changing / increasing from zero. .

44.Mention the functions performed by the measurement system.

The functions performed by the measurement system are • Indicating function • Recording function • Controlling function

45.State the function of measurement system.

The measurement system consists of a transducing element which converts the quantity to be measured in an analogous form the analogous signal is then processed by some intermediate means and is then fed to the end device which presents the results of the measurement.

46. Define Fidelity

It indicates how much faithfully the system reproduces the changes in the input. It is the ability of an instrument to produce a wave shape identical to wave shape of input with respect to time .It is defined as the degree to which an instrument indicates the changes in the measured variable without dynamic error.

47. A PMMC instrument has a 0.12T magnetic flux density in its air gaps. The coil dimensions are D = 1.5 cm and L =2.25 cm. Determine the number of coil turns required to give a torque of 4.5 N-m when the coil current is 100 A.

$T_{d=} NBldi$, $N=\frac{Td}{BldI} = \frac{4.5*10^{-6}}{0.12*2.25*10^{-2}*1.5*10^{-2}*100}$

48.What is the electrical current effect used to produce deflecting torque in a PMMC instrument?

When a current (I) carrying conductor of size l and d and N turns, cuts a magnetic field of flux density B and if the field is radial then the deflecting torque T_d = NBldI = GI

49.Compare internal resistance of an ammeter and a voltmeter.

The internal resistance of an ammeter is very low and of a voltmeter is very high.

50.What causes errors in moving iron instruments?

Temperature coefficient of spring, self heating of coils in voltmeters, Stray magnetic fields, changes of reactance of working coils, changes of magnitudes of eddy currents cause errors in moving iron instruments.

51.State two sources of error in moving iron instrument.

Hysteresis Error, Temperature error, Stray magnetic field, Frequency errors, Eddy currents

52.List the various types of errors in electro dynamometer type instrument

Low torque to weight ratio, Frequency error, Eddy currents, External magnetic fields, Temperature change

53.What is the need for control torque and state the methods to provide it in Analog indicating instruments?

Control torque is needed to produce a torque equal and opposite to deflecting torque at the final steady position of pointer in order to make the deflection of the pointer definite. Controlling torque is achieved in analog instruments by two methods. They are Gravity control, Spring control.

54.State the errors in PMMC instruments.

Weakening of permanent magnets due to aging and temperature effects, Weakening of springs due to aging and temperature effects, Change of resistance of moving coil with temperature.

55.Compare the merits of attraction and repulsion type MI instruments?

s.no	Attraction type	Repulsion type

Merits	a. Lower value of inductance b. Accurate over a wider range of frequency and c. Greater possibility of using shunts with ammeters.	a. Suitable for economical production. b. Uniform scale

56.Differentiate between moving coil and moving iron instruments

Moving coil	**Moving Iron**
The coil in the instrument is moving and connected to the pointer	The coil used is fixed and produces the necessary magnetic field and an iron place is moving
Suitable only for DC measurements	Suitable for both AC and DC Measurements
The scale is uniform	The Scale is non Uniform
The accuracy is high	The accuracy is less
It is free from hysteresis and stray magnetic field errors	Serious errors exist due to hysteresis frequency changes and stray magnetic fields
The power consumption is low	The power consumption is on higher side

57.How are basic instruments converted into higher range ammeter?

To extend the Ammeter range shunt of low resistance is connected in parallel with meter resistance. When heavy currents are to be measured, the major part of the current is bypassed through this shunt resistance.

Shunt resistance can be calculated using the formula. $R_{sh}= R_m/(m-1)$

R_m – meter resistance m -Multiplying power = I/I_m.

Series resistance(multiplier) is connected in series with basic meter and this combination is connected across the voltage to be measured.

Rs=(m-1)Rm Rs=series resistance Rm=meter resistance m=multiplier =V/v V=voltage to be measured v=voltage across the meter movement.

58.**Why PMMC ammeters are most widely used instrument?(Dec 2014)**

PMMC ammeters are the most accurate instrument, also they have the following properties

Low power consumption, Uniform Scale, No Hysterisi loss, High Torque/Weight ratio, Efficient eddy current damping

59.State the purpose of shunts in the voltmeter. (May 2015)

Shunt is always used for limiting the current through the meter, which will help to change the range of meter.

60. A basic D' Arsonval movement with a full deflection of 50 micro amp. and internal resistance of 500 ohm is used as voltmeter. Determine the value of the multiplier resistance needed to measure a voltage range of 0-10V. (May 2015)

$R_s=(V/I_m)-R_m$

$R_s = (10/50x10^{-6}) -500 = 199.5$ K ohm.

61.Give the classification of digital voltmeters?

1.Non integrating and 2.Integrating Type

The Non integrating type digital voltmeters are further classified as a.poentiometric type:These are further classified as

1.Servo potentiometric2.successive approximation3.Null balance type b.Ramp Type:These are sub classified as Linear type22.Staircase type

The integrating type digital voltmeters are classified as a)Voltage to frequency converter b)potentiometric c)Dual slope integrating

62.Draw the basic block diagram of DVM

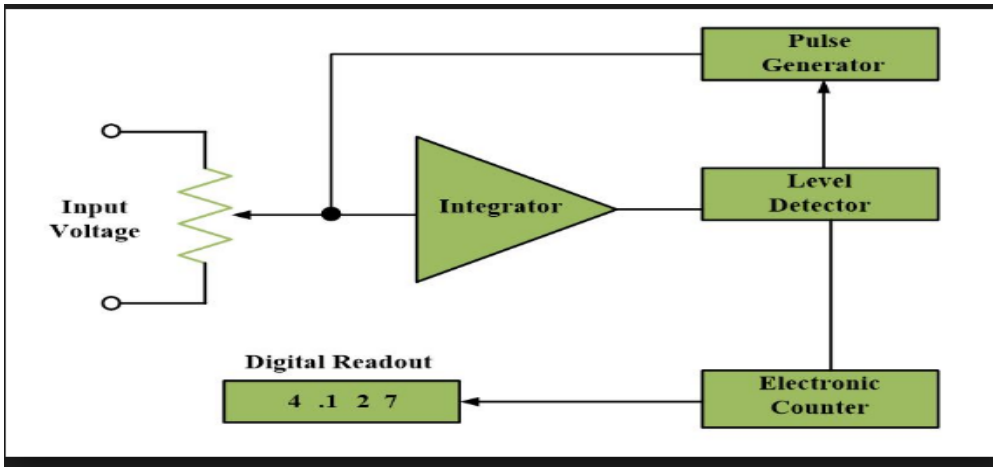

63. A 20 V dc voltage is measured by analog and digital multimeters. The analog instrument is on its 25 V range , and its specified accuracy is ± 2%. The digital meter has 3 ½ digit display and an accuracy of ±(0.6+1). Determine the measurement accuracy in each case

Analog instrument: Voltage error = ± 2% of 25 V = ± 0.5 V error = ± 0.5 V × 100% 20 V = ± 2.5% Digital instrument: For 20 V displayed on a 3 ½ digit display 1 Digit = 0.1 V Voltage error = ± (0.6% of reading + 1 Digit) = ± (1.2 V + 0.1 V) = ± 0.22 V error = ± 0.22 V × 100% 20 V = ± 1.1%

64. Signal from 800-1500 mV may be converted to 8-bit binary codes starting from 01010000 2 (8010) to 10010110 2 (15010). In this case, the step size k is equal to 10 mV.

Quantization error or Conversion error of a A/D

$$\text{Quantization error} = \frac{\text{step size}}{\text{full scale}} \times 100 = \frac{1}{2^N - 1} \times 100\%$$

Where N is the number of bit

Unit II Electrical and Electronic Instruments
Part A

1. Define creeping in energy meter?

In some energy meters a slow but continuous rotation is obtained even when there is no current flowing through the current coil and only pressure coil is energized. This is called creeping.

2. What are the causes of creeping in an energy meter?

Over compensation for friction, Excessive voltage across the potential coil, Vibrations, Stray magnetic fields.

3.How is creep effect in energy meters avoided?

Two diametrically opposite holes are drilled in the disc of the energy meter. When one of the holes comes under the edge of the pole of the shunt magnet the rotation being limited to a maximum of half a resolution. In some cases a small piece of iron is attached to the edge of the disc.

4.How is the compensation for inductance of pressure coil realized on low power factor watt meter?

By connecting a capacitor across a part of series resistance in the pressure coil circuit the compensation for inductance of pressure coil is realized on low power factor watt meter.

5.List the different types of wattmeter.

Ferro dynamic wattmeter, Electrodynamometer wattmeters, Thermal watt converter.

6.What is ampere-hour and watt-hour?

Ampere hour: the speed of rotation is proportional to ampere hour in ampere hour meter.
Watt-hour: the speed of rotation is proportional to power in Watt-hour meter

7.State two adjustments which are possible in induction type energy meter.

Preliminary light load adjustment, Full load unity factor adjustment, Lag adjustment with adjustable resistance & Lag adjustment with change of position of shading bands, Light load adjustment, Creep adjustment.

8.How is LPF wattmeter different from UPF wattmeter?

LPF wattmeter has extra features to increase the deflecting current and to reduce the errors introduced because of inductance of pressure coil. The pressure coil circuit is designed to have low value of resistance to increase the current and operating torque. LPF wattmeter is designed to have compensation for pressure coil current, compensation for inductance of pressure coil and small control torque.

9.An energy meter is designed to make 100 revolutions of disc for one unit of energy. Calculate the number of revolutions made by it when connected to load carrying 40 A at 230V and 0.4 power factor for an hour. (Nov 2004)

Actual energy consumed = V I cos t = 230 x 40 x 0.4 x 1 = 3.680 kWh

No of revolutions per kWh = 100

No of revolutions for 3.680 kWh = 368.

10.What is phantom loading?

When the current rating of a meter under test is high a test with actual loading arrangements will cause considerable waste of power. To avoid this phantom loading or fictitious loading is done. In phantom loading, pressure coil is supplied with normal voltage and current coil circuit with separate low voltage supply to circulate rated current because the current circuit has low impedance. The total power consumed in this method is small.

11.If an induction type energy meter runs fast, how can it be slowed down?

Adjusting the position of braking magnet and making it move away from the centre of the disc can slow the energy meter down.

12.How to make adjustments in energy meters to reduce the error?

Preliminary light load adjustment, Full load unity factor adjustment, Lag adjustment (low power factor adjustment) Light load adjustment, Creep adjustment.

13.State the essential torques required for successful operation of an instruments.

• Deflecting torque • Controlling torque • Damping torque.

14.List the errors in electro dynamometer type wattmeter.

a.Errors due to pressure coil inductance.
b.Error due to pressure coil capacitance.
c.Error due to mutual inductance Effects.
d.Errors caused because of connections.
eEddy current errors.
f.Stray magnetic field errors.
g.Errors caused by vibration of moving system.
h.Temperature errors.

15.What is the need for lag adjustment devices is single phase energy meter?

The energy meter will read true value of energy only when the phase angle between supply voltage and pressure coil flux is 90 deg. This requires that the pressure coil winding should be highly inductive and has a low resistance, but even with this phase of flux and voltage few degrees less than 90. So lag adjustments are necessary to bring this shunt magnet flux in exact quadrature with supply voltage.

16.List the errors in single phase energy meter.

Errors caused by driving system: In correct magnitude of fluxes, Incorrect phase angle, Lack symmetry in magnetic circuit. Errors caused by braking system: Changes in strength of brake magnet, Changes in disc resistance, Self-braking effect of series magnet flux, Abnormal friction of moving parts.

17.What are two classes of dynamometer Wattmeters?

Suspended-coil, torsion instruments the moving or voltage coil is suspended from a torsion head by a metallic suspension, which serves as a lead to the coil, Pivoted-coil, direct-indicating instruments.

18.What is the expression for reactive power in 3-phase circuits?

Reactive power Q = 3VI Sin Phase angle = $\tan^{-1}$ Q/P, P= active power.

19.How is the error due to pressure coil inductance reduced / eliminated?

Errors caused by pressure coil inductance compensated by means of a capacitor connected in parallel with a portion of multiplier (series resistance). Connecting this capacitance across multiplier reduces the circuit impedance purely depends on pressure coil resistance alone.

20.What are the special features incorporated in low power factor wattmeter?

Pressure coil current, the pressure coil circuit is designed to have low value of resistance to increase the current and operating torque, Compensation for pressure coil current, Compensation for inductance of pressure coil, Small control torque.

21.A load draws 10 A current from 230V AC mains at 0.75 power factor for half an hour. What is the energy consumed?

Energy consumed = power x time = VI Cos x t =230 x l0 x 0.75 x 0.5 = 0.863 kWh

22.A simple slide wire is used for measurement of current in a circuit. The voltage drop across a standard resistor of 0.1 is balanced at 75 cm. Find the magnitude of the current if the standard cell emf of 1.45 V is balanced at 50 cm.

Voltage drop per unit length = 1.45 / 50 = 0.029 V / cm

Voltage drop across 75 cm length = 75 x 0.029 = 2.175 V

Current through the resistor = I = 2.175 / 0.1 = 21.75 A.

23.Define burden of an instrument transformer.

The rated burden is the volt ampere loading which is permissible without errors exceeding the limits for the particular class of accuracy.

Total secondary winding burden = (Secondary winding induced voltage)^2 / (impedance of secondary winding circuit including impedance of secondary winding) = (Secondary winding current)^2 x (impedance of secondary winding circuit including impedance of secondary winding)

Total secondary winding burden due to load = (Secondary winding terminal voltage)^2 / (impedance of the load on the secondary winding) = (Secondary winding current)^2 x (impedance of load in the secondary winding circuit).

24.What are the advantages of instrument transformers over shunts and multipliers?

Instruments of moderate size are used for metering, Instruments and meters can be standardized so that there is a saving in overall Cost, Single range instruments can be used to cover large current or voltage range, The metering circuit is isolated from the high voltage power circuits, There is low power consumption in metering circuit, Several instruments can be operated from a single instrument transformer.

25.What is the need to evaluate phase-angle error in instrument transformers? April 2008

Wattmeter readings are affected by phase angle errors etc.

26.State any two applications of CT and of PT. (Or) What is the use of C.Ts & P.Ts?

The extension of instrument range, so that current, voltage, power and energy can be measured with instruments of moderate size &The high voltage and current of power systems are stepped down by C.T and P.T and measured by instruments of moderate size.

27.Define nominal and turns ratio of an instrument transformer.

For a C.T : Nominal ratio = rated primary winding current / rated secondary winding current.

Turns ratio = number of turns of secondary winding / number of turns of primary winding.

For a P.T: Nominal ratio = rated primary winding voltage / rated secondary winding voltage

Turns ratio = number of turns of primary winding / number of turns of secondary Winding.

28.Define transformation ratio of an instrument transformer. (Nov 2004)

For a C.T: Transformation ratio (R) = primary winding current / rated secondary winding current.

For a P.T: Transformation ratio (R) = primary winding voltage / secondary winding voltage.

29.What is a difference between voltage transformer & current transformer?

The voltage transformer may be considered as parallel transformer with its secondary winding open circuit. Current transformer is a series transformer operates with its secondary short circuit conditions.

The primary winding current in a C.T is independent of secondary winding circuit conditions while primary winding of P.T depends on the secondary circuit.

In P.T full line voltage appears across its terminals whereas in C.T small voltage appears.

30.What are the applications of DMM?

It is mostly used in laboratory for the measurement of AC voltage and current measurement, DC voltage and current measurement, Resistance and Frequency measurement.

31.What are the different methods used for frequency measurement in power frequency range?

Types of frequency meters: Mechanical or resonant type, Electrical or resonant type, Electrodynamometer type, Weston type, Ratio meter type, Saturable core type

32.Give the importance of iron loss measurement.

Many apparatus like transformer, generator, and motor etc. use magnetic materials for their construction. The design of transform core, armature for motor and generator is very important. To have high efficiency, the losses must be as minimum as possible. Hence from ideal designing point of view, the iron loss measurement is important.

33. Differentiate between analog instruments and digital instruments?

S.No	Parameter	Analog	Digital
1	Accuracy	Less up to+-0.1%of full scale	Very high accuracy up

			to +-0.005%of reading
2	**Resolution**	Limited up to 1 part in several hundreds	High upto 1 part in several thousands
3	**Power**	Power required is high hence can cause loading	Negligible power is required hence no loading effects
4	**Cost**	Low input impedance	High in cost compared to analog but now a days cost of digital instruments is also going down
5	**Input Impedance**	Not compatible with modern digital instruments	Very high input impedance
6	**Compatibility**	Reading speed is low	The digital output can be directly fed into memory of modern digital instruments
7	**Speed**	Not available	Reading speed is very high
8	**Programming Facility**		Can be programmed and wll suite dfor the computerized control

34.What is DMM?

It is the digital multimeter is an instrunment which is capable of measuring AC voltages DC Voltages and DC Currents and resistors over several ranges.

35.List out the methods used for measurements of iron loss in ferromagnetic materials

1.Wattmeter 2.Bridge method 3.Potentiometer method 4.Oscillographic method.

36.List the various magnetic measurements

- Measurement of flux density B in a specimen of ferromagnetic material
- Measurement of magnetizing force H,Producing the flux density B in air
- Determination of BH Curve and the hysteresis loop
- Determination of eddy current and the hysteresis loop
- Testing of permanent magnets.

37. List the methods used for measurement of BH Curve

1. Method of reversals 2.Step by step method

The basllistic test means DC test which are used to determine BH Curve and hysteresis loop of ferromagnetic materials

38.Draw the Equivalent circuit and phasor diagram of P.T

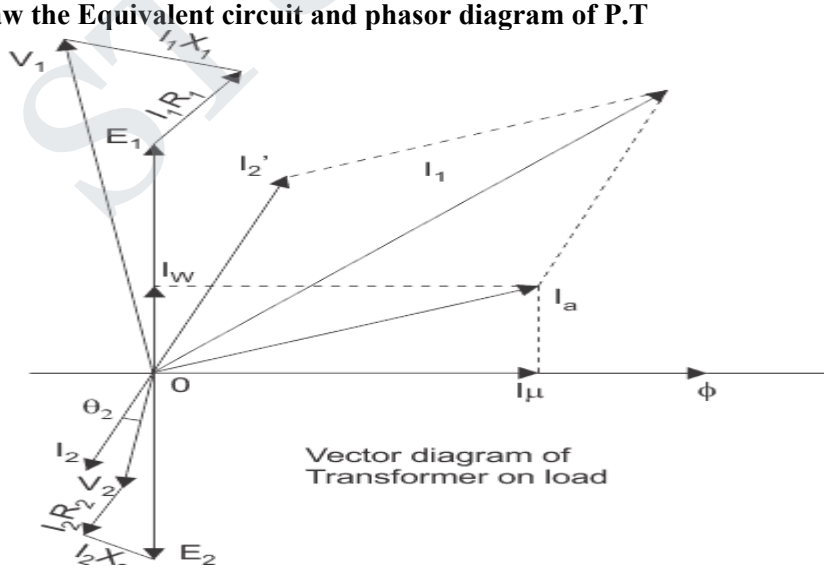

Vector diagram of Transformer on load

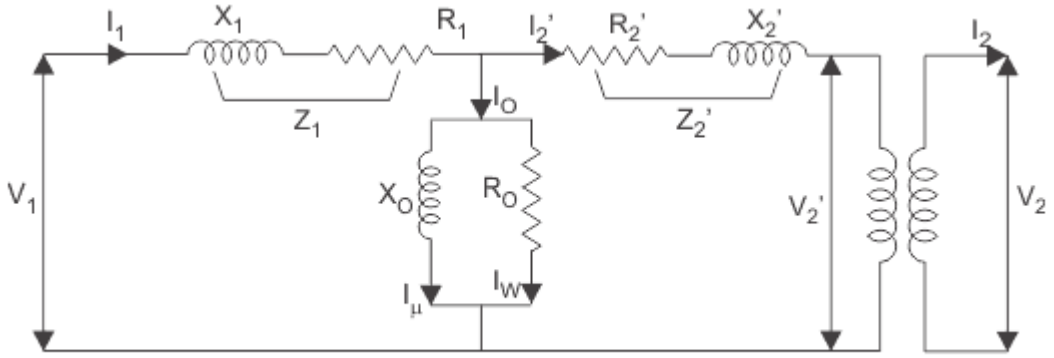

Equivalent Circuit of Transformer referred to Primary

39.What are the different methods used for frequency measurements in power frequency range?
1.Mechanical resonance type frequency meter 2.Electrical resonance type frequency meter3.Western type frequency meter.

40. State the purpose of shunt in the ammeter?
The shunt is used to bypass the heavier currents so that ammeter carries safe current and also used to extend the range of the ammeter

41.Discuss in brief about the hysteresis in BH Curve
For a magnetic material when the field strength H is increased the flux density B increases up to certain point and saturates .If H is reduced to zero again the flux density B does not trace the same curve back and falls back compared to its previous values. It will not become zero again when H becomes zero. This phenomenon of falling back of flux density during demagnetization curve is called hysteresis in BH curve

16.
17.

UNIT - III COMPARISON METHODS OF MEASUREMENTS

PART-A

1.State and explain the basic principle of potentiometer.
A potentiometer is an instrument designed to measure an unknown voltage by comparing with known voltage, voltage can be measured independent of source resistance. The process of adjusting the working current, so that the voltage across a portion of sliding wire against a standard reference is known as standardization. The slide wire has a uniform cross section and hence uniform resistance along its entire length. A calibrated scale in cm and fractions of cm is placed along the slide wire. The slide wire position multiplied by the working current indicates the unknown voltage.

2.How are AC potentiometers classified? List them.
A.C potentiometers can be classified according to the manner in which the unknown voltage may be measured by the instrument dials and scales, Polar type and Coordinate type.

3.What is a potentiometer and mention the applications of DC And AC Potentiometer? (May 2015)
A potentiometer is an instrument designed to measure an unknown voltage by comparing with known voltage, voltage can be measured independent of source resistance. Potentiometers are extensively used in calibration of voltmeter ,ammeter, wattmeter and it is a standard for calibration of these instruments and measurements of resistance and power.

4.What is the advantage of venire potentiometer over slide type?
This instrument has two ranges they are normal range of 1.6V down to 10 μV and a lower range of 0.16 V down to 1 μV. High precision and accurate than slide wire type.

5.Name the parts of a Drysdale potentiometer?
Drysdale phase shifter, Transfer instrument, Kelvin varley slide wire.

6.What is the most important difference between d,c. and a,c potentiometer?
In D.c potentiometer the magnitude of unknown emf and potentiometer voltage drop have to be made equal to obtain balance whereas in a.c instrument both magnitude and phase of the two have to be the same to obtain the balance.

7.What is the need for phase shifters in a polar type A.C. Potentiometers?
Phase shifter has two windings separated by 90 deg. A variable resistance and a variable capacitance are connected between the two windings. By adjusting these two variables the currents flowing through the two windings are adjusted so that the magnitudes are same and phase difference between them is 90 deg.

8. What is called a volt-ratio box when it is used?

A volt-ratio box is a precision potential divider network. Which consist of a high resistance with a number of tappings where resistances between various pairs of tapping's are properly adjusted .generally basic dc potentiometers the maximum voltage measured is less than 2V.So practically when voltage to be measured is greater than 2Va volt ratio box is used.

9. Why is the Wheatstone bridge not suitable for measuring very low resistances?

If Wheatstone bridge is used for low resistance measurement the resistance of connecting leads and contact resistance also included, the error caused by beads can be corrected, but contact resistance presents a source of uncertainty, that will be very difficult to overcome.

10. What are the applications of potentiometers?

Calibration of voltmeter, Calibration of ammeter, Measurement of resistance, Measurement of power.

11. What is standardization of potentiometer?

In case of a d.c potentiometer, the process of adjusting the working current supplied by the supply battery and such a voltage drop across a portion of sliding wire matches with the standard reference source. so that the voltage across a portion of sliding wire against a standard reference is known as standardization. But in case of an a.c potentiometer, the standardization is done with the help of standard d.c source i.e a standard cell or a Zener source and a transfer instrument. This instrument is usually an electrodynamometer milli ammeter, so constructed that its response to alternating current is the same as its d.c response.

12. What are leakage current effects?

Loss is more, Life of the equipment is reduced.

13. A wheatstone bridge is shown in fig. The values of resistances are P = lkΩ, R=lkΩ, S=5 kΩ, R_G = 100Ω. The Thevenin source generator voltage is 24mV. Galvanometer current is 13.6 μA. Calculate the value of Q.

$$R_0 + G = \frac{24\times10^{-3}}{13.6\times10^{-6}} = 1.765k\Omega$$

$$R_0 = 1.665k\Omega$$

$$R_0 = \frac{RS}{R+S} + \frac{PQ}{P+Q} = \frac{1\times5}{1+5} + \frac{1\times Q}{1+Q}$$

$$= 0.833 + \frac{Q}{1+Q} = 1.665k\Omega$$

$$Q = 4.95k\Omega$$

14. Name the bridge used for measuring very low resistance.

Kelvin's double bridge.

15. Classify the resistances according to the values.

Low resistance <1Ω , Medium resistance 1Ω to 0.1MΩ, High resistance > 0.1 MΩ.

16. What are the methods of measurements of low resistance?

Ammeter - Voltmeter method, Kelvin Double bridge method, Potentiometer method

17. What are the methods of measurements of medium resistance?

Ammeter - Voltmeter method, Substitution method, Wheatstone bridge method, Ohm meter method.

18. What are the methods of measurement of earth resistance?

Fall of potential method, Earth tester.

19. List the various detectors used for AC bridges.

Headphones, Vibration galvanometer, Tunable amplifier detectors.

20. A Maxwell' s capacitance bridge shown in figure, is used to measure an unknown inductance in comparison with capacitance. Calculate R_1, L_1 also the value of storage factor of coil, if frequency is 1 kHz.

$$R_1 = \frac{R_2R_3}{R_4} \;;\; L_1 = R_2R_3C_4 \;;\; Q = \frac{\omega L_1}{R_1} = \omega R_4C_4 = 2\pi\times1000\times R_4C_4$$

21. Define Q factor of an inductor. Write the equations for inductor Q factor with RL series and parallel equivalent circuits. (Nov 2004)

Q factor is the ratio of conductance to the susceptance of the inductor.

For RL series circuit, Q = ωL / R. For RL parallel circuit Q = R /ωL

22. What are the sources of errors in ac bridges?

Stray conductance effects due to imperfect insulation, Mutual inductance effects, due to magnetic coupling between various components, Stray capacitance effects due to electrostatic fields, Residues in components.

23. State merits and limitations of Maxwell's bridge when used for measurement of unknown inductance.

Merits: This bridge is very useful for measurement of a wide range of inductance at power and audio frequencies. The two balance equations are independent if we choose R_4 and C_4 as variable elements.
The frequency does not appear in any of the two equations.
Limitations: This bridge requires standard capacitor which may be very expensive. This bridge is limited to measurement of low Q coils. Additional series resistance is necessary to obtain balance.

24. What are the limitations of Maxwell's bridge?

Maxwell's bridge is unsuitable for coils with very low value of Q and high Q coils. (l <Q<l 0)
This bridge requires standard capacitor which may be very expensive. Additional series resistance is necessary to obtain.

25. State the merits and demerits of Anderson's bridge?

Merits: It is much easier to obtain balance in the case of Anderson's bridge. A fixed capacitor can be used instead of variable capacitor. This bridge can be used for determination of capacitance in terms of inductance.
Demerits: This bridge is more complicated one, in terms of set up and balance conditions.
Additional junction point increases the difficulty of shielding the bridge.

26. Mention any two types of A.C bridges used for measuring self-inductance.

Maxwell's inductance bridge, Anderson's bridge, Maxwell's inductance-capacitance bridge, Hay's bridge.

27. Give the advantages of Schering Bridge.

Schering Bridge is used for measuring capacitance and dissipation factor. In particular it is used in the measurement of properties of insulators, capacitor bushings, insulating oil and other insulating materials.

28. Write the necessary balance conditions for a Schering Bridge.

29. State the two conditions for balancing an A.C. bridge.

The product of magnitude of opposite arm impedances should be equal. The sum of phase angle of opposite arm impedances should be equal. i.e $Z_1Z_4(\theta_1+\theta_4) = Z_2Z_3(\theta_2+\theta_3)$ Z_1, Z_2 ,Z_3, Z_4 impedances of four arms, Θ_1, θ_2, θ_3, θ_4 phase angle of complex impedance.

30. What are the sources of Electromagnetic interference?

a. Gas discharge b. Sparking in electrical switches c. Signals from RADAR, Radio transmission Shielding- to prevent both electrical and magnetic components

31. With a neat circuit diagram, write the balanced equation of Wheatstone bridge.

Wheatstone Bridge

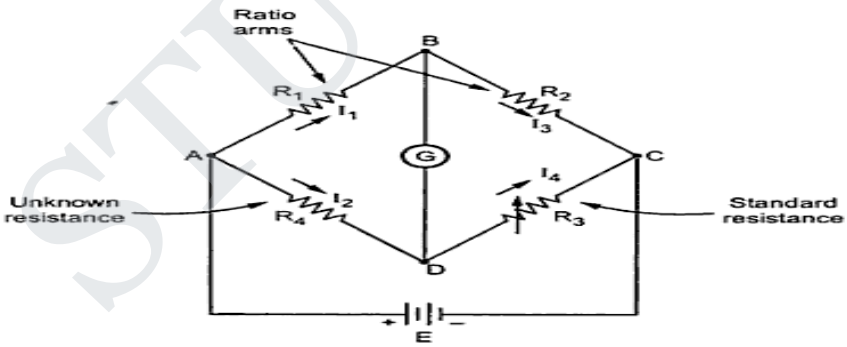

Fig. Wheatstone bridge

$$R_4 = R_3 \frac{R_1}{R_2}$$

32. Draw the circuit diagram write the expression for unknown inductance and its resistance of Anderson's bridge.

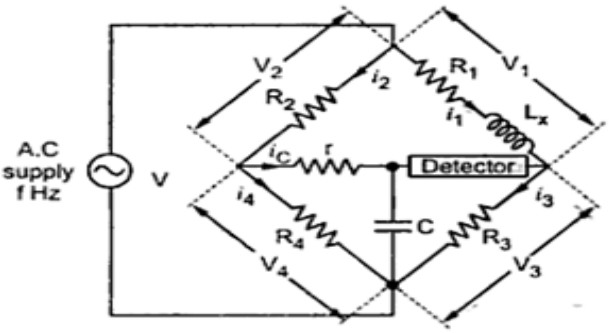

$$L_x = \frac{CR_3}{R_4}[R_2 r + R_4 r + R_2 R_4] \quad \text{and}$$

$$R_1 = \frac{R_2 R_3}{R_4}$$

33. What is meant by grounding?

Grounding is the process of *removing* the excess charge on an object by means of the transfer of electrons between it and another object of substantial size. When a charged object is grounded, the excess charge is balanced by the transfer of electrons between the charged object and a ground

34.What are the various detectors used in bridge network?

Head phones
Vibration galvanometer
Tunable amplifier detector

35.Write the two conditions to be satisfied to make an a.c. bridge balance.

The two conditions are, 1. $|Z_1Z_4| = |Z_2Z_3|$ ……magnitude condition

2. $\theta_1 + \theta_4 = \theta_2 + \theta_3$ ……angle or phase condition

36.Write four applications of AC. Bridge.

1. To measure unknown inductance. 2. To measure unknown capacitance. 3. To measure dissipation factor. 4. To measure quality factor. 5. To measure frequency.

37. When Kelvin bridge is used and why?

In the Wheatstone bridge, the bridge contact and lead resistance causes significant errors, while measuring low resistances below 1Ω. To consider the effect of contact and lead resistance and to reduce the corresponding errors, the Kelvin Bridge is preferred over Wheatstone bridge to measure low resistances.

38. State the difficulties in measuring high resistances?

• Due to high resistance, very small current flows through measuring circuit which is difficult to sense. • Presence of leakage currents. • The stray charges appearing due to electrostatic effects. • The delay time is required in the measurement so that charging and absorbing currents get stabilize. This time may be very long in some cases. • The very high voltage is required to raise the magnitude of current. This may damage the galvanometer if proper case is not taken.

39. Name the potentiometer material used.

• German silver • Manganin wire

40.Comparison of DC potentiometer and AC Potentiometer

S.No	Parameter	DC Potentiometer	AC Potentiometer
1	Balance condition	Obtained when two emfs are equal in magnitude	Magnitude as well phase of two emfs are same
2	Detector used d Arsonval	Basic galvanometer is used null detector	Vibration galvanometer is used as null detector
3	Accuracy	More accurate than AC	It is less accurate than DC
4	Complexity	The connection diagram is less	The connection diagram is complex

		complex	
5	Reference Source	It requires reference source for obtaining balance condition	No reference is required
6	Obtaining Balance point	Obtaining balance point is very easy	Obtaining balance point is very difficult

41.**Mention the grounding techniques available in measurements.**
Plate type Earthing, Pipe type Earthing, Rod Earthing, Earthing through waterman, Strip or Wire Earthing

UNIT IV STORAGE AND DISPLAY DEVICES
PART—A

1.What are the major blocks of oscilloscope?
Cathode ray tube, electron gun, vertical & horizontal plates, time base circuit, trigger circuit
2.What are the major components of CRT?
Cathode ray tube, electron gun and vertical &horizontal plates
3.Why is a delay line used in the vertical section of the oscilloscope?
The electronic circuit causes a certain amount of time delay in transmission of signal voltages to deflection plates. To allow the operator to observe the leading edge of signal waveform, the signal drive for the vertical CRT plates must be delayed by at least the same amount of time.
4.How is the electron beam focused to a fine spot on the face of the cathode ray tube?
Electron beam from the cathode pass through the concave electrostatic lens aligned towards the axis of the CRT and after passing through the second concave lens focused at the phosphor screen. Focal length of the lens is adjusted by varying the potential difference between the two cylinders.
5.List the disadvantages of storage cathode ray tube.
Finite amount of time – storage tube preserves waveform power to the storage tube present as long as the image is to be stored. Trace of storage tube is not fine as a normal CRT. Writing rate of storage tube is less than conventional CRT which limits the speed of storage oscilloscope. Expensive and needs additional power supply.
6.List any two display devices.
LED or LCD displays.
7.How is an oscilloscope used to determine frequency?
Knowing the time period by using f=1/T.
8.How to avoid parallax errors in CRT?
The accuracy of these marks depends on how close the graticule marks can be placed to the actual phosphor to eliminate parallax.
9.What is CRT graticule?
It is usually rectangular in form & is placed inside the display area to allow correct measurements.
10. What are the different types of analog recorders?
Graphic recorders, Oscillographic recorders, Magnetic tape recorders.
11. What are the types of graphic recorders?
Strip chart recorders, X- Y recorders
12. What are the various components of a recording instrument?
Recording head, Magnetic tape, Reproducing head, Tape transport mechanism, conditioning devices.
13. Define Q factor of an inductor and classify inductors based on Q factors.
Q factor of an inductor = $\omega L/R$ $Q<1$ = very low Q coils, $1 < Q < 10$ = low Q coils, $Q > 10$ = high Q coils
14. What are the different types of digital display devices?
Cathode ray tube (CRT) ; Flat panel display; Light-emitting diode (LED) displays; Plasma display panels (PDP); Liquid crystal display (LCD)
15. What are the different types of graphic recorders?
Graphics recorders are of 3 types namely ; heated stylus; optical light; ink jet
16. What are the types of strip chart recorders?
Strip chart recorders are mainly of two types namely; galvanometer type and null balance type.
17. What are the basic components of a magnetic tape recorder?
Two sprockets that turn the tape spools, below the sprockets, there are two electromagnetic heads used for stereo recording, internal components in the recorder are the capstan and the pinch roller
18. List the advantages of magnetic tape recorders.

Magnetic tape recorders are available in various sizes and in various forms such as in portable, semi-portable and rack mounted forms. Owing to their unique features they have wide applications. A few of them are mentioned below: 1)Medical research and patient monitoring. 2) Data recording and analysis on missiles, aircraft and satellites. 3)Communications surveillance and spying. 4) Industrial research and production monitoring and control, including recording of stresses and vibrations, logging of fuel consumption and analysis of noise.

19. What is the working principle of magnetic tape recorder?

The recording process itself relies on the principles of magnetism. The tape recorder uses electromagnets (the heads) to apply a magnetic flux to the ferric oxide on the tape. Each electromagnet is made of an iron core wrapped with wire. There is a small gap in the electromagnet head which actually allows the recording to take place.

20. What is data logging?

The process of using a computer to collect data through sensors, analyze the data and save and output the results of the collection and analysis.

21. What are the functions of data logger?

A data logger (or data recorder) is an electronic device that records data over time or in relation to location either with a built in instrument or sensor or via external instruments and sensors.

22. State the applications of an X-Y recorder.

Plotting current vs voltage curves of diodes and transistors, plotting B-H curves of magnetic materials and plotting speed- time curves for electric motors.

23. What is the use of aquadag in a CRO?

Prevents the formation of -ve charge on the screen and state of equilibrium of screen is maintained.

24. Brief up the working principle of a digital encoder.

Digital encoders enable a linear or rotary displacement to be directly converted into digital form without intermediate forms of analog to digital coversion.

25. What is the principle of operation of an ink-jet printer?)

An inkjet printer places extremely small droplets of ink onto paper to create an image. The dots are positioned very precisely with resolution upto 1440 x 720 dots per inch.

26. Distinguish between LED and LCD. (Dec 2013)

LED : Light -Function of current flow Advantage : Fast –turn-ON, turn OFF less than 1nS

LCD : Light scattering- reflective or transmissive, Require back lighting**,** Power reqd very less-microwatts/cm**,** Turn ON- few milliseconds**,** Turn OFF- tens of milliseconds

Advantage: Good contrast in bright ambient light, low power, compactible with ICs, low cost element.

27.What is the principle of working of Dot Matrix display?

Dot matrix (using more elements) can be used to **display** alphabets.

28. What is LED?

Light Emitting Diode , Light -Function of current flow.

29.What is the working principle of digital plotter?

A plotter is a printer that interprets commands from a computer to make line drawings on paper with one or more automated pens. Unlike a regular printer , the plotter can draw continuous point-to-point lines directly from vector graphics files or commands.

30. Compare Plotters and Printers.

Printer is a peripheral device that creates a solid copy of the digital data that is represented on the computer screen. Printers can be used to connect to a computer using a USB or wirelessly. A plotter is a computer printer that is used for printing vector graphics. Though originally they were used for printing computer-aided designs, in many applications these have been replaced by conventional printers

31. What is the technique used in strip chart recorders?

A chart recorder is an electromechanical device that records an electrical or mechanical input trend onto a piece of paper (the chart). Chart recorders may record several inputs using different color pens and may record onto strip charts or circular charts. Chart recorders may be entirely mechanical with clockwork mechanisms, electro-mechanical with an electrical clockwork mechanism for driving the chart (with mechanical or pressure inputs), or entirely electronic with no mechanical components at all (a virtual chart recorder).

UNIT V: TRANSDUCERS AND DATA ACQUISITION SYSTEMS

PART-A

1. What is a transducer? Give example.

Transducer is a device which converts the physical quantity into an electrical quantity. ex: Thermocouple - which converts the temperature into voltage.

2. What is an active transducer? Give any two examples.

Transducers, which converts the input signal to an electrical signal without an external power supply is known as active transducer. Example: Thermocouple, piezoelectric crystals.

3. What is a passive transducer? Give two examples.

Transducers, which convert the input signal to an electrical signal with an external power supply is known as passive transducer. Example: LVDT, RTD.

4. What is a primary transducer? Give an example.

Primary transducers will have first contact with the process variables or process parameters. Example: all the mechanical elements like load cell, bourdon tube, etc.

5. What is a secondary transducer? Give an example.

Secondary transducer converts the output from the primary into a useful variable, mainly in the form of electrical signals. Example: LVDT, Strain gauges, etc.

6. Distinguish between sensor and transducer.

Sensor is the primary element used to sense the measurand. The quantity to be measured is first sensed and detected by an element called sensor which gives the output in a different analogous form. Ex: level sensor, bourdon tube.

Transducer is a device which coverts the physical quantity into electrical quantity. ex: thermocouple, RTD. In many cases the physical quantity is directly converted into electrical quantity by a transducer without the primary sensing element.

7. What are the classifications of instruments?

The instruments are classified into 2 categories (a) absolute instruments, (b) secondary instruments.

8. Distinguish between active and passive transducer.

Sl.No	Active transducer	Passive transducer
1	Transducer which converts input signal to an electrical signal without an external power supply	Transducer which converts input signal to an electrical signal with an external power supply
2	Example : thermocouple, piezoelectric crystals	Examples : RTD, LVDT.

9. What are the basic requirements of a transducer?

Linearity, Ruggedness, Repeatability, Convenient instrumentation, High stability and reliability, Dynamic response, Excellent mechanical characteristics

10. What are Resistive transducers? Give Examples.

Resistance variation type transducer is one of the important groups of transducer that are quite popular, simple and versatile. Many system variables like displacement, acceleration, vibration, force, temperature, humidity, sound level, light intensity, and ete can be transduced using resistance transducer. Here the physical variable under measurement makes changes in the resistance. The change in resistance can be measured using appropriate bridge circuits. Example: potentiometer and strain gauge.

11. Why resistive transducers are called so?

The resistance of a resistive transducer is given by R = L/A. where is the specific resistance of the material used, L is the length of the material and A is thee cross section area of the wire. If L or A varies naturally the resistance is going to vary. As the output is found with the variation of resistance, it is called as resistive transducer.

12. Define piezo resistive effect.

If a metal conductor is stretched or compressed, its resistance changes on account of the fact that both length and diameter of the conductor changes. Also there is a change in the value of resistivity of the conductor when it is stretched. This property is called piezoresistive effect.

13. What is meant by piezoelectric effect?

A piezoelectic material is one in which an electric potential appears across certain surfaces of a crystal if the crystal are changed by the application of a mechanical force. This potential is produced by the displacement of charges. This effect is reversible.

14. Name any four piezo electric materials.

Quartz, Barium titanate($BaTiO_3$), Potassium dihydrogen phosphate(KH_2PO_4), Rochelle salt($NaKC_4H_4O_6.4H_2O$), Lithium Niobate($LiNbO_3$)

15.Give a list of metals used in Resistance thermometers.

The lists of metals used in resistance thermometers are as follows:

Platinum, Copper, Nickel ,Tungsten

16.State seeback effect and peltier effect.

When two metals having different work functions are joined together and the junctions are kept at different temperatures, a voltage is generated at the junction which is proportional to the temperature difference between two junctions. The reverse of Seeback effect is called Peltier Effect in which the flow of current causes one junction to heat and the other junction to cool.

17.Give a list of metals used in thermistors.

Manganese. Cobalt, Nickel, Iron, Uranium oxide.

18.List the features of thermistors.

Advantages:
High temperature sensitivity
Fast response time
Lead resistance negligible
Can be manufactured in any shape
Disadvantages:
Highly non-linear.
Insensitive for low temperature measurement.
Unstable for high temperature measurement

19.What is smart sensor?

It is defined as a tranducer with an integrated circuit with signal conditioning circuitry in house giving standard output signal in a digital form which can be communicated bus to the central control room in a process plant

20.What is a load cell?

Load cell is an electromechanical device. It is a primary transducer because it cannot measure the load applied without a strain gauge. Here strain gauge acts as a secondary transducer. Strain gauges are made up of homogenous materials like steel alloys.

21.State the principle of inductive transducers.

It is based on the principle of change in the reluctance, permeability, number of turns in the coil and orientation of the coil which may produce a change in the inductance or mutual inductance of the transducer. Inductance of the coil = $\frac{N^2 mA}{L} = N^2 mG \frac{N^2}{R}$ Where, N, A, L R = number of turns, area, length and reluctance of the coils respectively. G- Geometric form factor. = effective permeability of the medium in and around the coil.

22.What is an LVDT? What are the advantages of LVDT?

It is a three coil inductive transducer operated in the differential mode. It consists of a primary coil and two secondary coil windings on a cylindrical former. The primary coil is connected to an alternating source whereas the differential output is taken from the two secondary coils.

Advantages: Wide range of linearity, Change of phase by 180 Deg When the core passes through the center position, Full-scale displacement is 0.1- 250mm, Sensitivity is 0.5- 2 mV.

23.Define gauge factor of a strain gauge.

Gauge factor can be defined as the ratio of change in resistance to change in length.

Gauge factor = (dR/R) /(dL/L)

24.Mention the different types of strain gauges used.

The two types of strain gauges are metallic and semiconductor. Further metallic strain gauges are divided into bonded and unbounded strain gauges.

25.Name some of the active transducers which are used in the measurement of temperature.

Thermocouples, Thermopile.

26.What are the factors to be considered for selection of transducers?

Operating principle, Sensitivity, Operating range, Accuracy, Cross sensitivity, Errors, Transient and frequency response, Loading effects, Environmental compatibility, Insensitivity to unwanted signals, Usage and ruggedness, Electrical aspects, Stability and reproducibility, Static characteristics

27.What is the principle of operation of optical transducer?

Integrated electronics that can perform one or more of the following function logic functions, two-way communication, make decisions.

28.Write the desired properties of thermocouple metals.

Type J: The Type J thermocouple has an **Iron** positive leg and a **Constantan** negative leg. Type J thermocouples can be used in vacuum, oxidizing, reducing and inert atmospheres. Due to the oxidation (rusting) problems associated with the iron leg, care must be used when using this

thermocouple type in oxidizing environments above 1000°F. The temperature range for Type J is 32 to 1400°F and it has a wire color code of white and red.

Type K: The Type K thermocouple has a **Chromel** positive leg and an **Alumel (Nickel- 5% Aluminum and Silicon)** negative leg. Type K is recommended for use in oxidizing and completely inert environments. Because it's oxidation resistance is better than Types E, J, and T they find widest use at temperatures above 1000°F. Type K, like Type E should not be used in sulfurous atmospheres, in a vacuum or in low oxygen environments where selective oxidation will occur. The temperature range for Type K is -330 to 2300°F and it's wire color code is yellow and red.

29. What are the two ways that the DAS are used to measure and record analog signals?

By using the Transducers, Signal conditioning equipment, Multiplexer, Calibrating equipment and integrating equipment able to measure and record analog signals.