UNIT-I

IC FABRICATION

PART-A

1. Mention the advantages of integrated circuits over discrete circuits. ***(AU ND 2016)***

Advantages of Integrated Circuits over Discrete Circuits are,

i. Miniaturization and hence increased equipment density.

ii. Cost reduction due to batch processing.

iii. Increased system reliability due to the elimination of soldered joints.

iv. Improved functional performance.

v. Matched devices.

vi. Increased operating speed

2. What are the limitations of integrated circuits? ***(AU ND 2016)***

The limitations of integrated circuits are

i. Faulty IC can't be repaired; they have to be replaced by a new one.

ii. Some components like transformers and inductors cannot be integrated into an IC.

iii. High grade P-N-P assembly is not possible.

iv. The IC will not work properly if wrongly handled or exposed to excessive heat.

v. It is difficult to achieve low temperature coefficient.

vi. It is difficult to fabricate an IC with low noise.

vii. It is not possible to fabricate capacitors that exceed a value of 30pF. Thus, high value capacitors are to be connected externally to the IC.

viii. There is a large value of saturation resistance of transistors.

3. What are the major categories of integrated circuits? ***(AU ND 2015)***

Integrated Circuits can be classified based on

(i) **Based on Mode of operation**

(a) Digital I.C.

(b) Analog I.C. (Linear IC)

(ii) **Based on fabrication**

(a) Monolithic I.C.

(b) Hybrid I.C.

(iii) **Based on Integration level**

(a) SSI -Small Scale I.C.

(b) MSI-Medium Scale I.C.

(c) LSI - Large Scale I.C.

(d) VLSI - Very Large Scale I.C.

4. Explain why buried layer is needed. ***(AU ND 2014)***

The buried layer is used in integrated transistor to decrease the collector series resistance. it provides the low resistivity current path. The buried n_+ layer shunts the n-epitaxial collector layer effectively, decreasing the resistance.

5. What is Ion Implantation? Why it is preferred over diffusion process?

(AU ND 2014)

The conductivity of the semiconductor increases when small impurity is added to it. The process of adding impurity is called doping while the impurity to de added is called dopant. So ion implantation is a process of adding dopant to the silicon substrate. The ion implantation process is controllable, reproducible and also there are no unwanted side effects.

6. **What are advantages of plasma etching?** ***(AU ND 2013)***
Some advantages of dry etching are its capability of automation and reduced material consumption. Dry etching (e.g., plasma etching) costs less to dispose of the products compared to wet etching. An example of purely chemical dry etching is plasma etching.

7. **List the three different IC package configurations.** ***(AU ND 2013)***
The following different IC package configurations are,
(i) Metal can package
(ii) Ceramic flat package
(iii)Dual– in – line package.

8. **Why inductors are difficult to fabricate in integrated circuits?** ***(AU MJ 2013)-2***
No satisfactory integrated inductors exist. If high Q inductors with inductance of values larger than 5μH are required, they are usually supplied by a wound inductor which is connected externally to the chip. Therefore, the use of inductors is normally avoided when integrated circuits are used.

9. **What is the significance of using buried layer?** ***(AU ND 2012)***

In general bipolar integrated circuits use epitaxial layer process in which high resistivity epitaxial is formed over a low resistivity substrate. To provide isolation between the epitaxial growth and the substrate, the doping used in both layers is of opposite type. Due to this a heavily doped buried layer is formed. The buried layer is also called diffusion layer.

10. **What are the advantages of polysilicon gate MOSFET over aluminium gate?**

(AU ND 2012)

The advantages of polysilicon gate MOSFET over aluminium gate is the silicon film is of high quality and suitable for IC manufacturing. SOI provides a speed advantage because the source/drain to body junction capacitance is practically eliminated because the junctions extend vertically to the buried oxide. The cost of a SOI wafer is many times higher than an ordinary silicon wafer and can increase the total Fabrication cost of IC chips by ~30%.

11. **List the basic processes used in IC Fabrication.** ***(AU MJ 2011)*** The following IC Fabrication processes are,

i. Silicon wafer (substrate) preparation
ii. Epitaxial growth
iii. Oxidation
iv. Photolithography
v. Diffusion
vi. Ion implantation
vii. Isolation technique
viii. MetallizationAssembly processing & packaging

12. What is the purpose of oxidation process in IC fabrication? ***(AU MJ 2010)***

The purpose of oxidation process in IC fabrication is the silicon wafers are stacked up in a quartz boat & then inserted into quartz furnace tube. The Si wafers are raised to a high temperature in the range of 950 to 1150_oC & at the same time, exposed to a gas containing O_2 or H_2O or both. The chemical action is

$Si + 2H_2O > Si\ O_2 + 2H_2$

13. What is parasitic capacitance? ***(AU ND 2010)***

In electrical circuits, parasitic capacitance is an unavoidable and usually unwanted capacitance that exists between the parts of an electronic component or circuit simply because of their proximity to each other.

14. Give the difference between monolithic and hybrid ICs. ***(AU ND 2010)***

Monolithic IC	Hybrid IC
1. In Monolithic circuits, all circuit components both active and passive elements and their interconnections are manufactured into or on top of a single chip of silicon.	1.Hybrid Integrated circuits separated component parts are attached to a ceramic substrate and interconnected by means of either metallization pattern or wire boards.
2. It is used for more applications in Linear and digital IC	2. It is used for adopt less applications
3. Cost wise is less.	3. Cost wise is slightly higher compared to monolithic ICs.
4. They are preferred only in low power applications.	4.They are preferred for high power applications.

15. What is lithography? ***(AU ND 2010)***

Lithography is a process by which the pattern appearing on the mask is transferred to the wafer. It involves two steps: the first step requires applying a few drops of photo resist to the surface of the wafer & the second step is spinning the surface to get an even coating of

the photo resist across the surface of the wafer.

16. What is photolithographic process? ***(AU ND 2010)***

Photolithography is a process used in micro fabrication to selectively remove parts o f a th in f il m o r th e bu l k o f a substrate. It uses light to transfer a geometric pattern from a photo mask to a light-sensitive chemical "photoresist", or simply

"resist," on the substrate. A series of chemical treatments then engraves the exposure pattern in to the material underneath the photo resist. In complex integrated circuits, for example a modern CMOS, a wafer will go through the photolithographic cycle up to 50 times.

17. Why aluminium is preferred in metallization process? ***(AU ND 2009)***

Aluminium is preferred in metallization process because,

i. It is relatively a good conductor

ii. It is easy to deposit aluminium films using vacuum deposition.

iii. Aluminium makes good mechanical bands with silicon.

iv. Aluminium forms low resistance, non – rectifying contact with p – type silicon and t the heavily doped n – type silicon.

18. **Compare the performance of n-p-n and p-n-p transistors with respect to IC fabrication.** ***(AU ND 2009)***

- The electron mobility in silicon is about 2.5 times than the hole mobility so the basic transit time will generally be shorter in npn transistors than in pnp transistors. This to a somewhat higher current gain and to improved high frequency performance for the npn transistors.

- As a result of the higher solubility of the donor dopants compared to boron a more efficient emitter base structure can be obtained in the case of an npn transistor than in the case of pnp transistor. Thus trading to a higher current gain .the structure of most bipolar ICs is based on the use of npn transistors.

- Mobility of electrons than holes , npn transistors are more frequently used than pnp transistors.

---

19. **What is meant by dielectric isolation? Mention its advantages and limitations.**

(AU MJ 2009)

Dielectric isolation is defined as the isolation technique in which the electrical isolation to each component is provided by surrounding them with a solid dielectric.The most commonly used dielectric are silicon, dioxide, ruby etc.

The main advantages of the techniques are that within same silicon substrate p-n-p as well as n-p-n transistors can be fabricated.

The disadvantages is the increase in the cost. As the technique needs additional steps in fabrication to deposit a dielectric layer, this technique is expensive.

Hence this technique is used for fabricating ICs for special military applications where performance of the circuit is of prime importance than the cost factor.

20. **Define the term epitaxial growth.** ***(AU MJ 2008)***

The word epitaxy is derived from Greek word epi meaning "upon" and the past tense of the word tension meaning "arranged". So, one could describe epitaxy as arranging atoms in single crystal fashion upon a single crystal substrate; so that the resulting layer is an extension of the substrate crystal structure.

Generally the doping types of the substrate and the epitaxial layer are opposite to provide isolation .thus n- type epitaxial layer is grown on p-type substrate which has resistivity of the order 1-2Ω cm .the epitaxial layer is useful as other components are fabricated within this layer. This layer may act as an element of diode, diffused capacitor of collector of transistor.

21. **Differentiate between thin film and thick film technology in IC fabrication.**

(AU ND 2007)

The differences of thin film and thick film technology in IC fabrication are

i. Thin film resistors have a lower tolerance than the thick film resistors.

ii. The capacitance of thin film resistors is lower than that of the thick film resistors.

iii. The temperature coefficient of thin film resistors is much lower than that of the thick film resistors.

iv. The production of thin film resistors is expensive than the production cost of the thick film resistors.

v. The process of manufacturing the thin film resistor is different from the manufacturing process of the thick film resistors.

22. **How are capacitors fabricated in ICs? Draw the cross sectional view of MOS capacitor?** ***(AU ND 2006)***

It consists a implanted or diffused heavily doped within substrate while a polysilicon or metal plate on the top of a thin oxide layer .for MOS capacitors, generally gate oxide is used with no extra processing step.

23. **What do you mean by monolithic process?** ***(AU MJ 2006)***

A monolithic IC is a type of "integrated circuit" electronic device that contains active and passive devices that are made in and on the surface of a single piece of a single crystal semiconductor, such as a Silicon (Si) wafer. A process called "planar technology" must be used in the single block (monolith), and be interconnected to the insulating layer over the same body of the semiconductor to produce a solid integral monolithic-IC.

24. **Name the parameters which govern the thickness of the film in the oxidationprocess.** ***(AU ND 2005)***

The main important parameter which governs the thickness of the film in the oxidation process is temperature. Because to grow the oxide layer high temperature is to be maintained. The other important parameters governing oxide film thickness are time up to which process is to be carried out and the moisture contents.

25. **What are the advantages of using dry etching process?** ***(AU ND 2005)*** The major advantage of using the dry etching process over wet etching process is that it is possible to achieve smaller openings of thickness≤1μm.

PART-B

1. (i) Describe about epitaxial growth process ***(6)(AU ND 2016)***
   (ii)Explain in detail about the photolithography process with neat diagram. ***(7)(AU ND 2016)***
2. Write a note on masking and etching process in IC fabrication. ***(13)(AU ND 2016)***
3. Discuss the different ways to fabricate diodes. ***(10)(AU ND 2015)***
4. Explain how a monolithic capacitor can be fabricated. ***(6)(AU ND 2015)***
5. Describe, in detail, any two isolation technique used to provide isolation between various components in IC fabrication with illustrations ***(8+8)(AU ND 2014)***
6. Explain, in step by step basis, the fabrication of planar P-N Junction diode with neat illustrations. ***(16)(AU MJ 2014)***
7. Explain CMOS fabrication with neat sketches. ***(8)(AU MJ 2014)***
8. What is photolithography? What is the purpose of diffusion? ***(6)(AU MJ2014)***
9. List the methods for fabricating integrated resistors and explain. ***(10)(AU MJ 2014)***
10. What is a schottky transistor? Draw the cross sectional view and explain its operation. ***(6)(AU ND 2014)***
11. Explain about the following : **(16)** ***(AU ND 2013)***
    (i) Epitaxial growth and diffusion .
    (ii) Photolithography masking and photo etching.
12. Discuss briefly about the fabrication methods for transistors and diodes. ***(16)(AU ND 2013)***
13. Explain the basic processes used in the fabrication of monolithic IC. ***(16)(AU MJ 2012)***
14. Explain the fabrication of n-channel JFET with necessary diagrams. ***(16)(AU ND 2012)***
15. Explain in detail the fabrication process of passive component in Integrated Circuits. ***(16)(AU ND 2012)***
16. With necessary diagrams explain the fabrications of MOSFET. ***(16)(AU MJ 2012)***

17. Briefly explain the various types of IC packages. Mention the criteria for selecting an IC package. ***(8)(AU MJ 2010)***

18. Write short notes on classification of Integrated circuits. ***(8)(AU MJ 2010)***

19. With respect to the BJT based circuit given below, explain the various steps to implement the circuit into a monolithic IC. ***(16)(AU MJ2010)***

20. Explain the basic processes used in silicon planar technology with neat diagram. ***(16)(AU ND 2010)***

21. Briefly explain the process of ion implantation in IC fabrication. ***(8)(AU ND 2009)***

22. Discuss briefly the various steps involved in the fabrication of IC. Draw the layout of a circuit by considering an example. ***(10)(AU ND 2007)***

UNIT II
CHARACTERISTICS OF OPAMP

PART-A

1. Mention the applications of op-amp integrator. ***(AU ND 2016)***

The operational amplifier integrator is an electronic integration circuit. Based around the operational amplifier (op-amp), it performs the mathematical operation

of integration with respect to time; that is, its output voltage is proportional to the input voltage integrated over time.

Applications:

The integrator circuit is mostly used in analog computers, analog-to-digital converters and wave-shaping circuits. A common wave-shaping use is as a charge amplifier and they are usually constructed using an operational amplifier though they can use high gain discrete transistor configurations.

2.* What is integrator?** ***(AU ND 2016)

An integrator in measurement and control applications is an element whose output signal is the time integral of its input signal. It accumulates the input quantity over a defined time to produce a representative output. Integration is an important part of many engineering and scientific applications.

3. **Draw the frequency response characteristics of an AC Integrator and indicate the part where it behaves as a true integrator.** ***(AU ND 2015)***

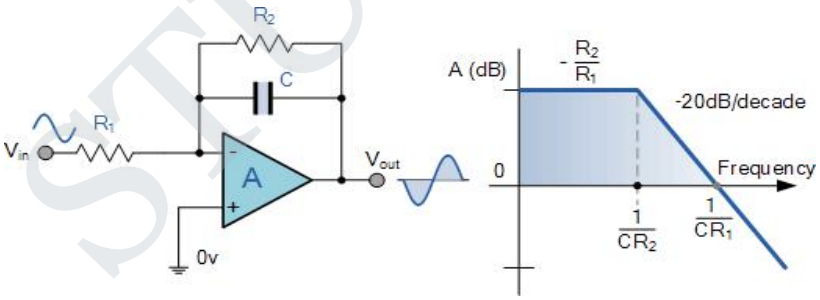

4. State the causes for slew rate in an operational amplifier? How it is indicated?

(AU ND 2014)

There is a capacitor with-in or outside of an op-amp to prevent oscillation. It is this capacitor which prevents the output voltage from responding immediately to a fast changing input. The slew rate is defined as the maximum rate of change of output voltage caused by a step input voltage. It is given by in capacitor.

5. What is the value of open loop gain and output impedance of an ideal op-amp?

(AU ND 2013)

The value of open loop gain and output impedance of an ideal op-amp is,

i. Open loop gain is infinite. ($A=\infty$)

ii. Output impedance is low. ($z_0=0$)

6. Define CMRR. ***(AU ND 2013)***

The expansion of CMRR is Common –Mode Rejection Ratio.

The relative sensitivity of an op-amp to a difference signal as compared to a common mode signal is called the common –mode rejection ratio. It is expressed in decibels.

CMRR= A_d/A_c

7. What is the input impedance of a non-inverting amplifier? ***(AU MJ 2013)***

8. Input impedance of a non- inverting amplifier is extremely large (= ∞) as the op-amp draws negligible current from the signal source.

9. Design a subtractor using op-amp. ***(AU ND 2012)***

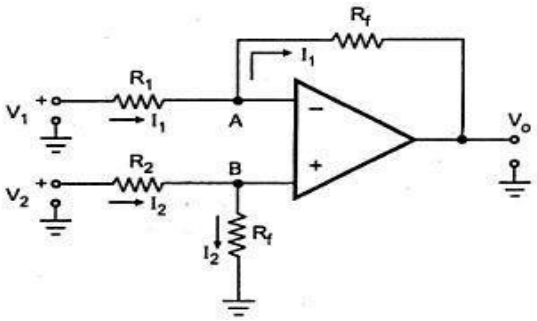

10. What is thermal drift? ***(AU ND 2011)***

The bias current, offset current & offset voltage change with temperature. A circuit carefully nulled at 25$_o$C may not remain so when the temperature rises to 35$_o$C. This is called thermal drift. Often, offset current drift is expressed in nA/ $_o$C and offset voltage drift in mV/ $_o$C.

11. Define Input offset voltage and input offset current in an op-amp. ***(AU ND 2011)***

Input offset voltage:

This is the voltage required to be amplified at the input for making output voltage to zero volts.

It is the voltage that must be applied between the input terminals of an op-amp to nullify the output. Since this voltage could be positive or negative its absolute value is listed on the data sheet.

Input offset current:

The algebraic difference between the current into the inverting and non-inverting terminals is referred to as input offset current Iio. Mathematically it is represented as I_{io} = $|I_B+ - I_B-|$ Where

I_B+ is the current into the non-inverting input terminals.

I_B- is the current into the inverting input terminals.

12. **Give the ideal characteristics of operational amplifier and give its equivalent circuit.**

(AU ND 2010)

The ideal characteristics of operational amplifier are

i. Open loop gain infinite ($A=\infty$)

ii. Input impedance infinite ($z_1=\infty$)

iii. Output impedance low ($z_0=0$)

iv. Bandwidth infinite

v. Zero offset, ie, Vo=0 when V1=V2=0

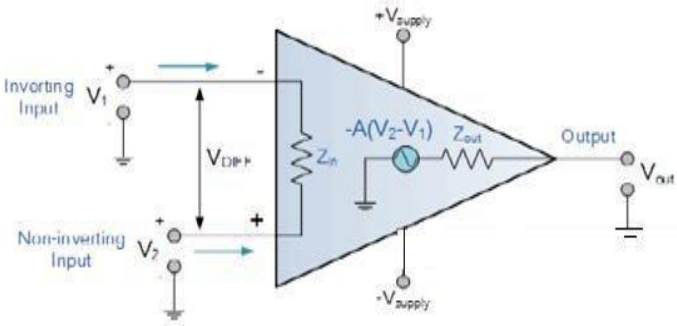

13.* Draw the circuit diagram of an integrator and give its output equation.** ***(AU MJ 2010)

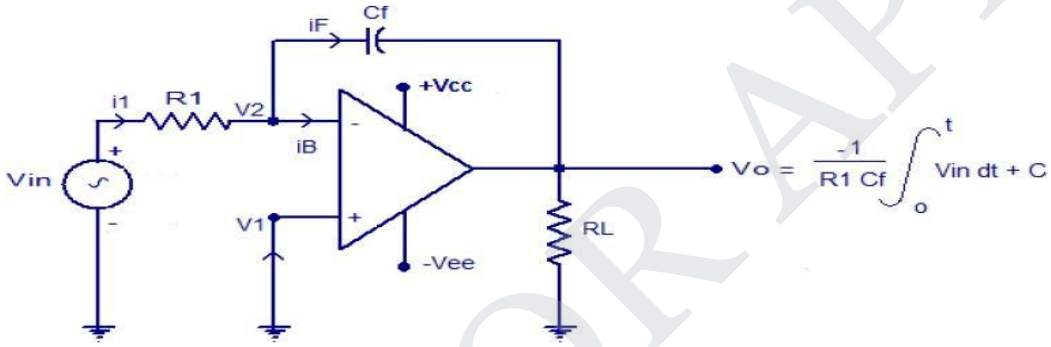

14.* Design an amplifier with a gain of –10 and input resistance of 10 k .** ***(AU MJ 2010)

Given the gain of the amplifier is negative, an inverting amplifier has to be made.
Input resistance R_1=10kΩ,
A_{CL}= (V_o/V_i) =-(R_f/R_1)

R_f = -A_{CL} R_1 = - (-10) x 10kΩ

R_f = 100kΩ

15.* List the four non ideal dc characteristics of OP-Amp.** ***(AU ND 2010)

The non ideal dc characteristics of OP-Amp are

i. Input impedance

ii. Output impedance

iii. Frequency response

iv. Slew rate

16. Define slew rate and state its significance. ***(AU ND 2010)***

The slew rate is defined as the maximum rate of change of output voltage caused by a step input voltage. An ideal slew rate is infinite which means that op-amp's output voltage should change instantaneously in response to input step voltage.

The circuit of successive approximation ADC consists of a successive approximation register (SAR), to find the required value of each bit by trial & error. With the arrival of START command, SAR sets the MSB bit to 1. The O/P is converted into an analog signal & it is compared with I/P signal. This O/P is low or high. This process continues until all bits are checked.

17. **What is a precision diode? Draw the circuit diagram of a half wave precision rectifier with waveform.** ***(AU MJ 2009)***

Precision diode or super diode is a combination of opamp and diode which is a superior rectifier .A diode in the feedback loop of an op-amp behaves as a precision diode as its cut-in voltage gets divide by the open-loop gain of op-amp. Precision diode may be used for half-wave rectification, full wave rectification, peak value detector, clipper and clamper.

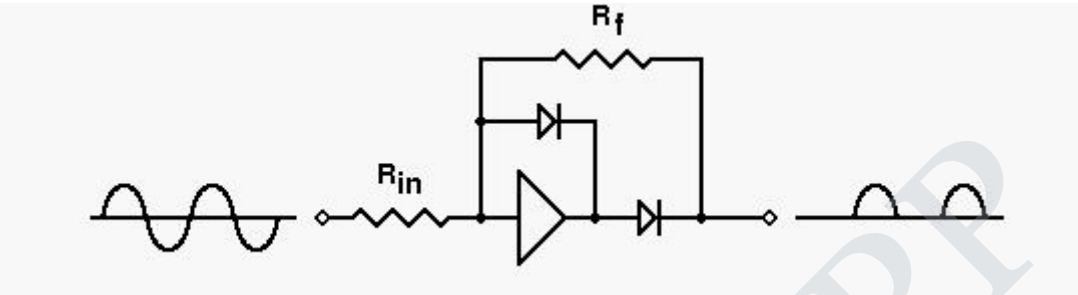

18. **In what way, a precision rectifier using op-amp is superior to a conventional rectifier?** ***(AU ND 2009)***

These rectifiers are used to rectify very small voltages or currents for which the diode never gets forward biased in the conventional one. i.e. voltage or currents are always less than .7V which cannot be rectified by normal rectifiers.

This rectifier doesn't give any kind of drop in output since diodes are previously biased using op-amp.

19. **List the basic blocks of an operational amplifier.** ***(AU ND 2009)***

An Op-Amp can be conveniently divided in to four main blocks

i. An Input Stage or Input Diff. Amp.
ii. The Gain Stage CE Amp.
iii. The Level Translator or level shifter.
iv. An output Stage or buffer.

20. **Compare ideal and practical characteristics of an op-amp.** ***(AU ND 2008)***

ideal characteristics:

i. Open loop gain infinite
ii. Input impedance infinite
iii. Output impedance low
iv. Bandwidth infinite

Practical characteristics:

i. The open-loop gain of op-amp decreases at higher frequencies due to the presence of parasitic capacitance.

ii. The closed-loop gain increases at higher frequencies and leads to instability.

21. **Why operational amplifier configurations are not used in linear applications?**

(AU ND 2007)

The operational amplifier configurations are not used in linear applications because

i. The open loop gain of the op-amp is very high. Therefore only the smaller signals having low frequency may be amplified accurately without distortion.

ii. Open loop Voltage gain of the op-amp is not a constant voltage gain varies with changes in temperature and power supply as well as mass production techniques. This makes op-amp unsuitable for many linear applications

iii. Bandwidth of most open loop op-amps is negligibly small or almost zero therefore op-amp is impractical in ac applications.

22. **Draw the circuit diagram of differentiator using op-amp.** ***(AU MJ 2006)***

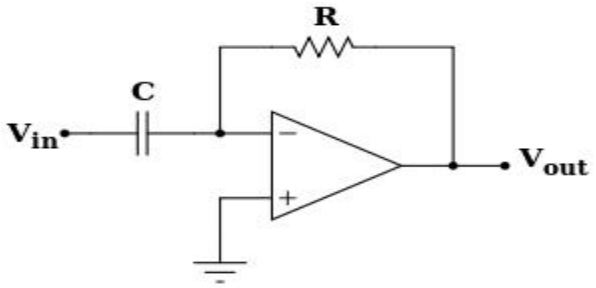

PART-B

1. Discuss in detail about the DC and AC characteristics of op-amp. ***(13)(AU ND 2016)***
2. Explain the differential amplifier using op-amp. ***(13)(AU ND 2016)***
3. Design an adder –subtrator circuit for $V_0=2V_1+5V_2-10V_3$. ***(6)(AU ND 2015)***
4. Determine the output voltage V_o and the current Io in the circuit as shown below.

(10)(AU ND 2015)

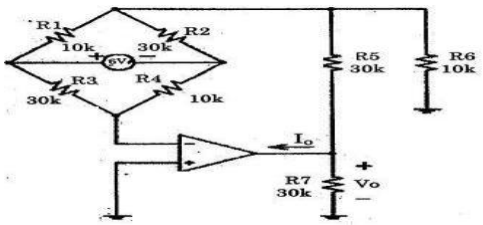

5. Obtain the closed loop voltage gain Vo/Vi of the circuit shown below. ***(16)(AU MJ 2014)***

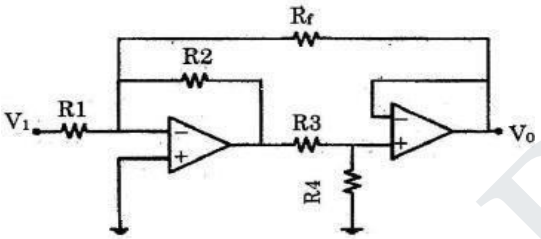

6. Discuss in detail the DC characteristics of an Op-Amp. ***(16)(AU MJ 2014)***
7. Explain briefly about how an operational amplifier is used as summer, integrator and differentiator ***(16)(AU ND 2014)***
8. With a neat diagram explain the working shunt feedback amplifiers and series feedback amplifiers. ***(12)(AU ND 2014)***
9. List the six characteristics of an ideal op-amp and explain in detail. Give the practical op-amp equivalent circuit. ***(16)(AU ND 2013)***
10. With a neat circuit diagram explain the operation of a Op-Amp differentiator and derive an expression for the output of a practical differentiator. ***(10)(AU ND 2012)***
11. Explain the different frequency compensation techniques of Op-Amp. ***(16)(AU ND 2012)***
12. Draw the circuit of a symmetrical emitter coupled differential amplifier and derive for CMRR ***(16)(AU MJ 2012)***
13. With neat diagrams explain the types of feedback configurations available. ***(8)(AU ND 2010)***

14. Briefly explain the frequency response of op-amp. Give the frequency compensation techniques adopted in operational amplifiers. ***(16)(AU ND 2010)***

15. Explain the functions of all the basic building blocks of an Op-Amp. ***(8)(AU ND 2010)***

16. Write a technical note on frequency response characteristics of differential amplifier. State the importance of frequency compensation. ***(10)(AU ND 2009)***

17. Explain various dc and ac characteristics of an op-amp. Distinguish between ideal and practical characteristics. ***(12)(AU ND 2009)***

18. Determine the output voltage of the differential amplifier having input voltages V_1=1 mV and V_2 =2 mV . the amplifier has a differential gain of 5000 and CMRR 1000. ***(4)(AU ND 2009)***

---

19. Define input bias current and sate its effect on op-amp performance .explain how input bias current compensation is obtained. ***(8)(AU ND 2007)***

20. Design a practical differentiator circuit that will differentiate an input signal with maximum frequency of 150Hz. ***(8)(AU ND 2007)***

21. Design a op-amp circuit to give an output. ***(8)(AU ND 2007)***

$V_0 = V_1 - 2V_2 + 2V_3 - 3V_4$.

22. What are the methods used to improve the slew rate? Briefly explain. ***(8)(AU ND 2007)***

UNIT III
APPLICATIONS OF OPAMP

PART-A

1. What is sample and hold circuit? Where it is used? ***(AU ND 2016)***

A sample and hold circuit is one which samples an input signal and holds on to its last sampled value until the input is sampled again. This circuit is mainly used in digital interfacing, analog to digital systems, and pulse code modulation systems.

2.* Draw the circuit of a positive clipper.** ***(AU ND 2016)

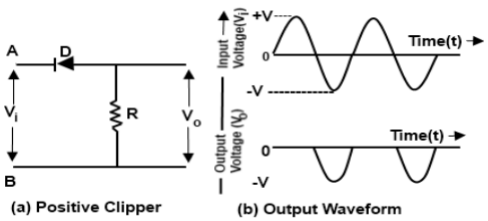

(a) Positive Clipper (b) Output Waveform

Figure 1:Series Positive Clipper

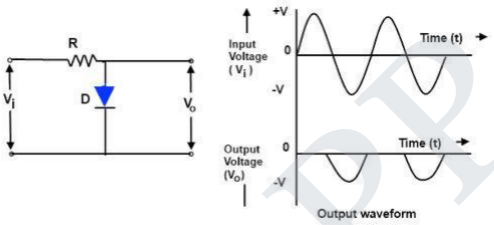

Figure : Shunt (parallel) positive clipper

3. What is the purpose of S/H in data converters? ***(AU ND 2015)***

A Sample and Hold circuit is one which samples an input signal and holds on to its last sampled value until the input is sampled again. This circuit is mainly used in digital interfacing, analog to digital systems, and pulse code modulation systems.

4. What is an instrumentation amplifier? ***(AU ND 2014)***

Instrumentation amplifier is defined as the special amplifier which is used for such a low level amplification with high CMRR, high input impedance to avoid loading, low power consumption and some other features is called an instrumentation amplifier. It is also called data amplifier and is basically a difference amplifier.

5.* Give any four important features of an instrumentation amplifier.** ***(AU MJ 2013)

The features of an instrumentation amplifier are

i. High gain Accuracy

ii. High CMRR

iii. High gain stability

iv. Low dc offset

v. Low O/P impedance

vi. Low power loss

vii. High output Impedance

6. What are the applications of sample and hold circuit? ***(AU ND 2013)***

A sample and hold circuit is one which samples an input signal and holds on to its last sampled value until the input is sampled again. This circuit is mainly used in

i. Digital interfacing,

ii. Analog to digital systems,

iii. Pulse code modulation systems.

iv. In storage of outputs of a multiplexer between updates in data distribution systems.

v. In reset –stabilised op-amps.

vi. In analog multiplexers.

7. How many resistors are required in a 12-bit weighted resistor DAC? ***(AU ND 2013)***

For 12 bit DAC the resistor required are 2_0R, 2_1R, 2_2R....2_nR. The largest resistor is 2048 times the smallest one for only 12bit DAC.

13 resistors are required.

12Connected with switches

1 is connected as feedback resistor.

8. Define monotonicity with respect to data converters. ***(AU ND 2012)***

Monotonicity is a property of certain types of digital-to-analog converter (DAC) circuits. In a monotonic DAC, the analog output always increases or remains constant as the digital input increases. The analog output never decreases during the input sequence. If the analog output decreases at any point during the input sequence, a DAC is said to be non-monotonic.

Monotonicity is an important characteristic in many communications applications in which DACs are used. Such applications can function in the presence of nonlinearity , but not in the presence of non-monotonicity. The term derives from monotonic mathematical functions, also known as non-decreasing functions, in which the value of the dependent variable never decreases as the value of the independent variable increases.

9.* What are the applications of peak detectors?** ***(AU ND 2012)

The applications of peak detectors are

i. Directional couplers to measure forward and reflected power on a transmission line (it is the original application of this circuit);
ii. Low power wattmeter's
iii. RF mill voltmeters
iv. Field strength meters
v. Radio receivers

10.* Why active filters are preferred?** ***(AU MJ 2012)

The active filters are preferred because

i. Gain & Frequency adjustment flexibility: Since op-amp provides some gain, input signal is not attenuated. Active filters are easier to time or adjust.
ii. No Loading Problem: Because of high i/p impedance & low o/p impedance of Op-amp, active filters does not cause loading of source or load.
iii. Cost: Active filters are more economical, because of cheaper op-amps and absence of inductors.

11.* Draw the circuit of first order active filter.** ***(AU ND 2011)

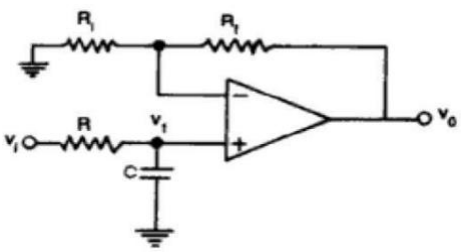

12. Draw the circuit diagram of sample and hold circuit. ***(AU ND 2011)***

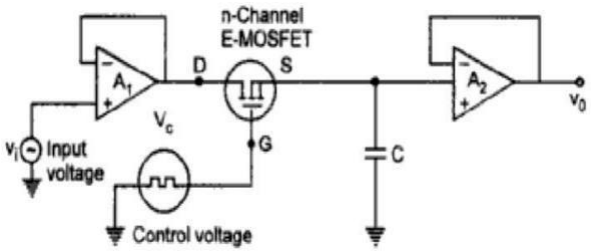

13. Draw the circuit diagram of an op-amp based positive clipper. ***(AU ND 2011)***

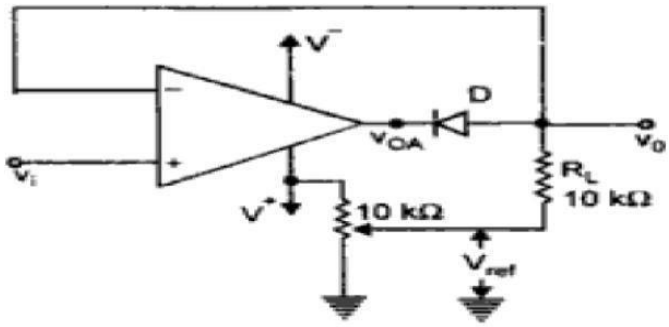

14. **List different parameters of the D/A and A/D converter given by the manufacturers.** ***(AU ND 2010)***

The parameters of the D/A and A/D converters are

i. Resolution

ii. Accuracy

iii. Monotonicity

iv. Conversion time and settling time

v. Stability

vi. Quantization error

15. Which is the fastest ADC and why? ***(AU ND 2010)-2***

The circuit of successive approximation ADC consists of a successive approximation register (SAR), to find the required value of each bit by trial & error. With the arrival of START command, SAR sets the MSB bit to 1. The O/P is converted into an analog signal & it is compared with I/P signal. This O/P is low or high. This process continues until all bits are checked.

16. An 8 bit DAC has a resolution of 20mV/bit. what is the analog output voltage for the

digital input code 00010110(the MSB is the left most bit)? ***(AU MJ 2010)*** The output voltage for input 00010110 is

$=20(0X2_8+0X2_7+0X2_6+1X2_5+0X2_4+1X2_3+1X2_2+0X2_1)$

=20X44

=880mV

17. **Draw the circuit of I-V converter using op-amp. State the application.**

(AU MJ 2012)-2

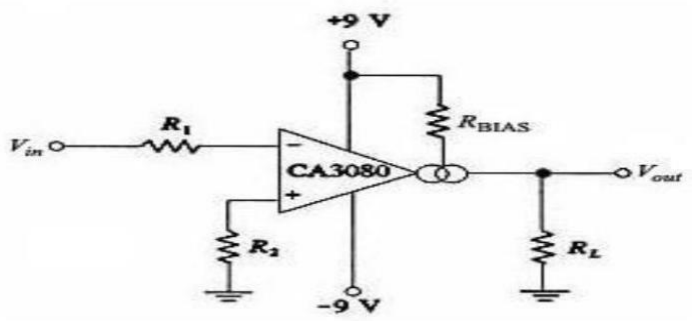

Application:

i. The photocell, photodiode and photovoltaic cell gives an output current that is proportional to an incident radiant energy or light.
ii. The current through these devices can be converted into voltage by using an I to V converter and thereby the amount of light or radiant energy incident on the photo device can be measured.

18. **What are the basic requirements of a good instrumentation amplifier?** ***(AU ND 2009)***
The basic requirements of a good instrumentation amplifier are,

i. Finite, accurate, and stable gain.
ii. Easier gain adjustment.
iii. High Input impedance.
iv. Low output impedance.
v. High CMRR.
vi. Low power consumption.
vii. Low thermal and time drifts.
viii. High slew rate.

19. Define resolution and accuracy of a DAC. ***(AU ND 2009)-3***

Resolution is the number of different analog output values that can be provided by a DAC.

For an n-bit DAC

Resolution=2_n

Resolution is also defined as the ratio o a change in output resulting from a change of 1 LSB at the digital inputs. For an n-bit DAC it can be given as

Resolution (in volts) = $V_{FS}/2_n$-1

Accuracy:

It is the maximum deviation between the actual converter output & the ideal converter output.

Relative accuracy:

It is the maximum deviation after gain & offset errors have been removed. The accuracy of a converter is also specified in form of LSB increments or % of full scale voltage.

20. What is a monostable multivibrator? ***(AU MJ 2009)***

Monostable multivibrator is one which generates a single pulse of specified duration in response to each external trigger signal. It has only one stable state. Application of a trigger causes a change to the quasi-stable state. An external trigger signal generated due to charging and discharging of the capacitor produces the transition to the original stable state.

21. What is meant by resolution of an ADC? **(AU MJ 2009)**

The resolution of a converter is the smallest change in voltage which may be produced at the output or input of the converter. Resolution (in volts) = $V_{FS}/2_n$-1=1 LSB increment. The resolution of an ADC is defined as the smallest change in analog input for a one-bit change at the output.

22. What is a zero crossing detector? ***(AU ND 2008)***

Zero crossing detector is defined as the basic inverting and non-inverting compactor act as a zero crossing detector provider that V_{ref} is set to zero. This circuit is also called as sine wave to square wave generator.

23. **Sketch the circuit of an op-amp employed as, a non-inverting zero crossing detector, along with input and output waveforms.** ***(AU ND 2007)***

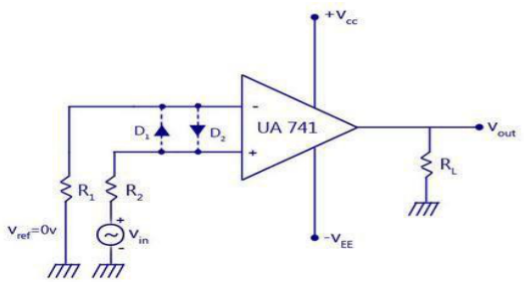

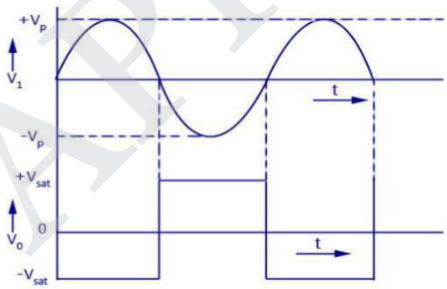

24.* List any four important applications of a comparator.** ***(AU ND 2007)

The applications of a comparator is

i. Zero crossing detector

ii. Window detector

iii. Time marker generator

iv. Phase detector

25.* What are the advantages of active filters?** ***(AU MJ 2007)

The advantages of active filters are

i. No Inductors were used.

ii. Signal attenuation can be avoided as in the case of passive filters.

iii. It improves the load drive capacity and isolates the load frequency determining circuit.

iv. Large value of resistors can be used, thereby reducing the value capacitors size used in the circuit.

26. **What is an antilog amplifier? Draw the circuit diagram of an antilog amplifier.**

(AU ND 2006)

Antilog amplifier is a decoding circuit to convert a logarithmically encoded signal back to the real signal.

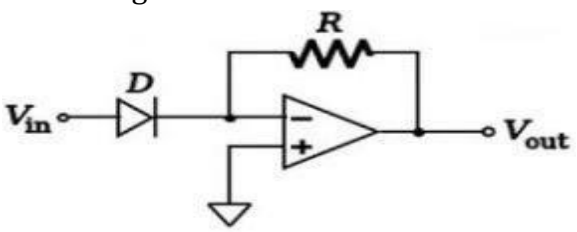

PART-B

1. Write a note on logarithmic and antilog amplifier using op amp. ***(13)(AU ND2016)***
2. Explain the working of SAR type and flash type A/D converter. ***(13)(AU ND 2016)***
3. A dual slope ADC uses 16-bit counter and 4MHz clock rate . the maximum input voltage is +10V .The maximum integrator output voltage should be -8V when the counter has cycled through 2n counts .the capacitor used in the integrator is0.1 μF. Find the value of resistor R of the integrator. ***(6)(AU ND 2015)***
4. Derive the expression for the log and anti log amplifiers with necessary diagrams. ***(10)(AU ND 2015)***
5. In a triangular wave generator given R_2=1.2kΩ, R_3=6.8kΩ,R_1=120 kΩ,C_1= 0.01 μF. determine the peak to peak o/p amplitude of triangular wave and frequency of the triangular wave. ***(8)(AU MJ 2015)***
6. Design a RC phase shift oscillator for a frequency of 1kHz . ***(8)(AU MJ 2015)***
7. Explain the operation of dual slop ADC with neat illustration. Also prove that this ADC is free from drifts . ***(10+6)(AU MJ 2014)***
8. With neat schematic representations explain the operation of the following circuits? (i)Positive peak follower.
   (ii)Active positive clamper to clamp the input signal above ground state by 5V. ***(16)(AU MJ 2014)***
9. (i) Explain the operation of peak detector and S/H circuit. ***(16)(AU ND 2014)-2***
   (ii)What is the use of an A/D convertor . Explain the dual slop type of A/D convertor.
10. (i) Differentiate a clipper and a clamper with neat sketches. ***(6)(AU ND 2014)***
    (ii)Explain the operation of a regenerative comparator. ***(10)(AU ND2014)***
11. Discuss the following applications of operational amplifiers. ***(16)(AU ND 2013)-2***
    (i) I/V and V/I Convertors(8)
    (ii) Astable Multivibrator(8)
12. Discuss briefly about the following with neat diagram. ***(16)(AU ND 2013)-2***
    (i)R-2R ladder type D/A converter.(8)
    (ii) Successive approximation A/D converter.(8)
13. Explain the principle of instrumentation amplifier and derive the gain for that circuit. ***(16)(AU MJ2013)***
14. Explain the working principle of RC phase shift sine wave generator using op-amp and derive the expression for 'f'. ***(16)(AU ND 2012)***
15. Explain with neat circuit diagram of any one sine wave oscillator using op-amp and derive expression for frequency of oscillation and gain of op-amp. ***(16)(AU ND 2012)-2***

he working of (i)Weighted resistor type DAC(ii) Dual slope type ADC.

(16)(AU MJ 2011)

17. Explain the first order low pass Butterworth filter with neat circuit diagram. Derive its frequency response and plot the same. ***(16)(AU ND 2010)***

18. Design a low pass filter with a cutoff frequency of 1kHz and with a pass band gain of 2. ***(16)(AU ND 2010)***

19. What is an instrumentation amplifier? Give the important features of an instrumentation amplifier. Explain the working of three op-amp instrumentation amplifier. Give its application. ***(16) (AU MJ 2010)***

20. (i)Design a monostable multivibrator using op-amp and obtain expression for pulse width T. ***(8)(AU ND 2009)***
    (ii)Explain the working of clamper and sample /hold circuit. ***(8)(AU ND2009)***

---

21. (i)Design a second order active high pass filter for a cut off frequency of 5kHz.

(8)(AU MJ2008)

(ii)Explain the functions of flash type A/D converter. ***(8)(AU MJ 2008)***

22. (i)Write short notes on voltage to time converters. ***(10)(AU ND 2007)***

(ii) What are the different sources of error in D/A converters. ***(6)(AU ND 2007)***

UNIT IV
SPECIAL ICs
PART-A

1. Draw the pin diagram of IC 555 timer ***(AU ND 2016)***

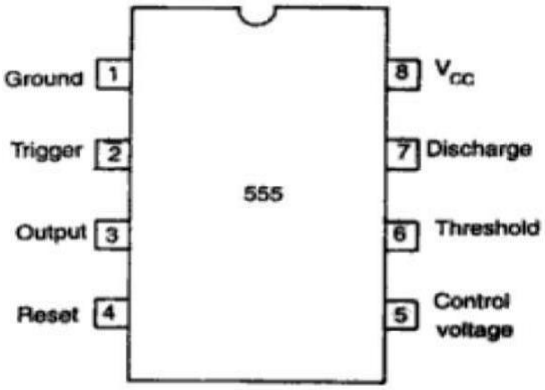

2. Define PLL. ***(AU ND 2016)***

A phase-locked loop (**PLL**) is an electronic circuit with a voltage or voltage-driven oscillator that constantly adjusts to match the frequency of an input signal. **PLLs** are used to generate, stabilize, modulate, demodulate, filter or recover a signal from a "noisy" communications channel where data has been interrupted

3. What are the advantages of variable transconductance technique? ***(AU ND 2015)***

The advantages of variable transconductance techniques are,

- Simple to integrate in to monolithic chip.
- Provides very good accuracy.
- Very cheap hence economical
- Provides four quadrant operation
- It provides high speed of operation which is 2 to 3 times more than the logarithmic method.
- Reduced error at least by 10 times.
- The bandwidth of 10 MHz and higher are available.

4. **Why invariably a suitable value of capacitor is connected to the pin 5 of 555 timer applications?** ***(AU ND 2015)***

A suitable value of capacitor is connected invariably to the pin 5 of 555 timer applications so as to bypass the unwanted ripples and noise present in the dc supply voltage, thereby the DC threshold limits can be accurately maintained. If pin 5 is not used it is usually grounded through a 0.01μF capacitor.

5. **Draw the block diagrammatic representation of a frequency multiplier using PLL.**

(AU ND 2014)

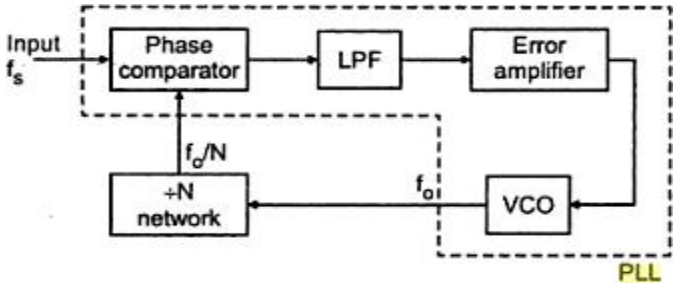

6. Draw the block diagram of a PLL. ***(AU ND 2014)***

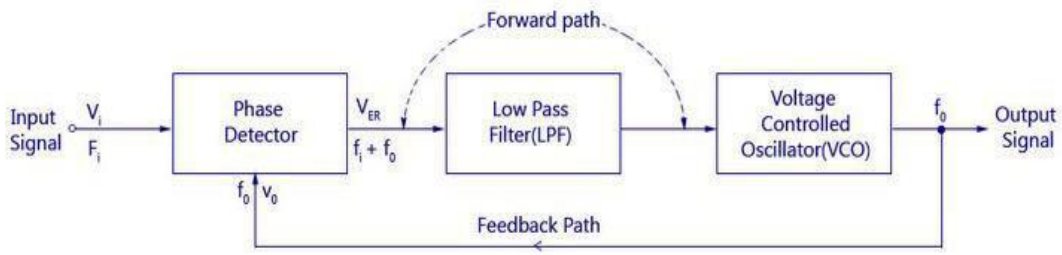

7. Define capture and lock range. ***(AU ND 2014)-4***

Capture range:

The range of frequencies over which the PLL can acquire lock with an input signal is called the capture range. It is also expressed as a percentage of f_o.

Lock range:

The range of frequencies over which the PLL can maintain lock with the incoming signal is called the lock-in range or tracking range. ***(AU ND 2013)-3***

8. List the applications of analog multipliers.

The applications of analog multipliers are

i. Analog computer

ii. Analog signal processing

iii. Automatic gain control

iv. True RMS converter

v. Analog filter (especially voltage-controlled filters)

vi. PAM-pulse amplitude modulation

(AU ND2013)

9. Define the terms settling time and conversion time related to DAC's. Settling time

Settling time represents the time it takes for the output to settle within a specified band+-(1/2) LSB of its final value. It depends upon the switching time of the logic circuitry due to internal parasitic capacitances and inductances. Settling time ranges from 100ns to 10μs depending on word length and type of circuit used.

Conversion time

Conversion time is the time taken for the D/A converter to produce the analog output for the given binary input signal. It depends on the response time of switches and the output of the Amplifier. D/A converters speed can be defined by this parameter. It is also called as setting time.

10. What is the function of a voltage regulator? ***(AU MJ 2013)*** A regulator circuit is a circuit used after the filter, which not only makes the dc voltage smooth and almost ripple free but also keeps the dc output voltage constant though input dc voltage varies under certain condition. Thus input to a regulator is an unregulated dc voltage while the output of a regulator is a regulated dc voltage, to which the load is connected.

(AU MJ 2013)

11. **What are the essential parts of PLL?**

The essential parts of PLL is,

i. Phase comparator

ii. Low pass filter.

iii. Error Amplifier

iv. Voltage controlled oscillator

12. **In a astable multivibrator using 555 timer R_A =6.8 kΩ, R_B =3.3 kΩ,C=0.1 μF. Calculate the free running frequency.** ***(AU ND 2012)***

f =1.07 kHz

13. **Why VCO is called voltage to frequency converter?** ***(AU ND 2012)*** The VCO provides the linear relationship between the applied voltage and the oscillation frequency. Applied voltage is called control voltage. The control of frequency with the help of control voltage is also called voltage to frequency conversion. Hence VCO is also called voltage to frequency converter.

14. **In what way VCO is different from other oscillators.** ***(AU MJ 2012)***

- To adjust the output frequency to match (or perhaps be some exact multiple of) an accurate external reference.
- Where the oscillator drives equipment that may generate radio-frequency interference, adding a varying voltage to its control input can disperse the interference spectrum to make it less objectionable. See spread spectrum clock.

15. **Mention any two applications of 555 Timer in Monostable mode.** ***(AU MJ 2012)***

The applications of IC555 timer in mono stable mode are

i. Frequency divider

ii. Pulse width modulation

iii. Missing pulse detector

iv. Linear ramp generator

16. **What are one, two and four quadrant multipliers?** ***(AU ND 2011)***

- In one quadrant multiplier the polarities of both the inputs must always be positive.
- A two quadrant multiplier functions properly if one input is held positive and the other is allowed to swing in both positive and negative.
- If both the inputs are allowed to swing in both positive and negative directions, the operation is four quadrant multiplier operations.

17. **List the applications of NE 565.** ***(AU ND 2010)***

The applications of NE 565 are

i. Frequency multiplier

ii. Frequency synthesizer

iii. FM detector

iv. FM Demodulator is the applications of NE565.

18.* Mention any two application of multiplier IC.** ***(AU ND 2010)

The multiplier is used for

i. Frequency shifting

ii. Voltage divider

iii. Measurement of real power

iv. Detecting phase-angle difference between two signals of equal frequency

v. Multiplying two signals

19. **Draw the relation between the capture range and lock range relationship in a PLL.** ***(AU ND 2010)***

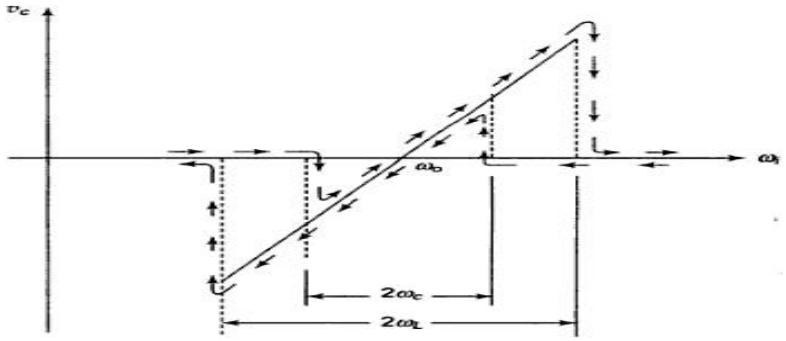

20. **Enlist the important features of 555 timer circuit .** ***(AU ND 2009)***

The features of 555 timer circuit are,

i. It has two basic operating modes: monostable and astable

ii. It is available in three packages. 8 pin metals can, 8 pin dip, 14 pin dip.

iii. It has very high temperature stability.

21. **Determine the output pulsewidth of the monostable amplifier using 555 timer if R=10kΩ and C=0.01μF.** ***(AU ND 2009)***

C=T/1.1R

T=1.1RC

T=1.1x10000x0.01x10_{-6}

T=0.11ms

22. **What are the different stages of operation in a PLL?** ***(AU MJ 2007)***

The different stages of PLL are

i. Free running

ii. Capture

iii. Locked/ tracking

23. What is a function of reset in 555 timer? ***(AU MJ 2006)***

555 timer is an interrupt for the timing device when pin 4 is grounded; it resets the timer output to low level irrespective of the input conditions.

24. Define the PULL time of PLL. ***(AU ND 2006)***

The total time taken by the PLL to establish lock is called pull-in time. It depends on the initial phase and frequency difference between the two signals as well as on the overall loop gain and loop filter characteristics.

25. **List the applications of 555 timer in Astable mode of operation.** ***(AU ND 2006)***

The applications of 555 timer in Astable modes are,

- FSK generator
- Pulse-position modulator

PART-B

1. With the help of schematic diagram, explain the operation of IC 566 VCO and derive its output frequency. ***(13)(AU ND 2016)***

2. What is PLL? How frequency multiplication is done in PLL? ***(13)(AU ND 2016)***

3. With neat diagram, explain the operation of four quadrant variable transconductance multiplier circuit. ***(16)(AU ND 2015)***

4. Explain with functional block diagram the operation of 566 voltage controlled oscillator. Also determine the maximum and minimum output frequencies in the circuit shown below. ***(10+6)(AU ND 2015)***

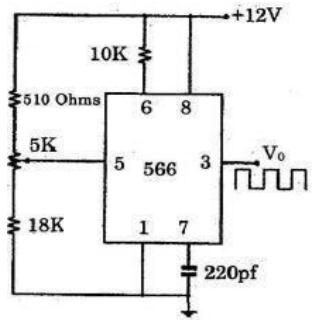

5. Explain the operation of an astable multivibrator configured around 555 timer IC and derive and derive an expression for output frequency with neat illustration. ***(16)(AU ND 2014)***

6. (i) Draw the functional block diagram and explain the characteristics of IC555.

   (ii)Write a short note on analog multiplier. ***(8+8)(AU MJ 2014)***

7. (i)Explain the functioning of IC566 as a PLL. ***(12)(AU MJ 2014)***

   (ii)Explain the applications of PLL as a frequency translator. ***(4)(AU ND 2014)***

8. Explain the operation of a square wave generator by drawing the capacitor and output voltage waveforms. ***(16)(AU ND 2013)***

9. Design and draw the waveforms of a 1kHz square waveform generator using 555 timer for duty cycle. (i) D=25%, (ii) D=50% ***(16)(AU MJ 2012)***

10. Perform the closed loop analysis of PLL. ***(16)(AU MJ 2012)***

11. Explain with a schematic how a PLL can be used as

    (i) Frequency multiplier.

    (ii) Frequency translator. ***(16)(AU ND 2012)***

12. Explain the Voltage Controlled Oscillator with a neat block diagram. Give its typical connection diagram and its output waveforms. ***(8)(AU ND 2011)***
13. Explain the astable and bistable operation of IC555 with necessary waveform. ***(16)(AU ND 2011)***
14. What are the modes of operation of IC555? Derive the expression of time delay of a monostable multivibrator. ***(16) (AU ND 2010)***
15. (i)With block diagram explain the principle of operation of NE565 phase locked loop. ***(8)(AU MJ 2009)***

    (ii)Describe the monostable operation of 555 timer. ***(8)(AU MJ 2009)***
16. With circuit schematic explain how the multiplier IC523 can be used as squarer and divider circuits. ***(8)(AU MJ 2009)***
17. Draw the circuit diagram of an astable multivibrator using 555 timer to generate the output signal with frequency 2 kHz and duty cycle of 75%. ***(8)(AU ND 2007)***

---

18. Draw the symbol of analog multiplier IC and write expression for V0.List the applications and explain any two. ***(8)(AU ND 2007)***
19. Define the voltage to frequency converting factor and derive its expression. List the applications of VCO. ***(8)(AU ND 2007)***

UNIT V
APPLICATION ICs
PART-A

1. What is SMPS? ***(AU ND 2016)***

A Switched-Mode Power Supply (**SMPS**) is an electronic circuit that converts power using switching devices that are turned on and off at high frequencies, and storage components such as inductors or capacitors to supply power when the switching device is in its non-conduction state.

2. What are the applications of fixed voltage regulators? ***(AU ND 2016)***

The applications of fixed voltage regulators are

i. Low current consumption

ii. Overvoltage/ Short-circuit protection

iii. Reverse polarity protection

iv. Over temperature protection

v. Load protection

3. What is meant by thermal shutdown applied to voltage regulators? ***(AU ND 2015)***

Thermal shutdown protection is very much necessary because due to self heating it is possible that the series pass element may get damaged permanently. Such a protection prevents the junction temperature to rise above a safe limiting value. This limiting safe value of junction temperature is 175_0C or less.

In this protection scheme, the junction temperature of the series pass element is sensed. By sensing this, its power dissipation is reduced till its temperature drops to a safe value.

4. Draw the internal block diagram of a function generator IC. ***(AU ND 2015)***

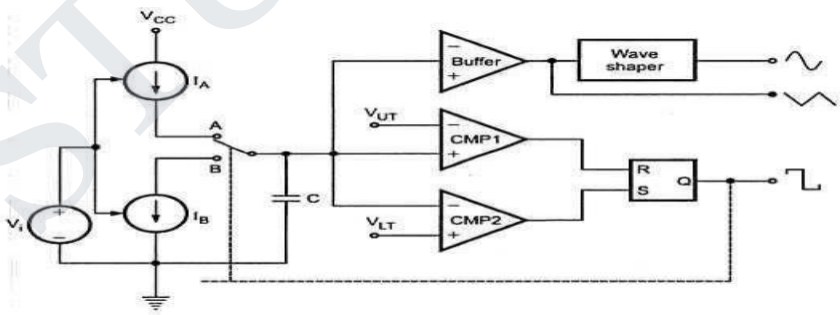

5. **State the need for protection diodes in voltage regulators based on LM317 regulators.** ***(AU ND 2014)***

Protection diodes in voltage regulators based on LM317 regulators are recommended for output voltages in excess of 25 V or high capacitance values (C_O > 25 F, C_{Adj} > 10 F). Diode D1 prevents CO from discharging through the IC during an input short circuit. Diode D2 protects against capacitor C_{Adj} discharging through the IC during an output short circuit. The combination of diodes D1 and D2 prevents C_{Adj} from discharging through the IC during an input short circuit.

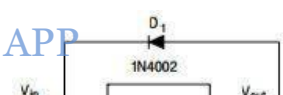

Voltage Regulator with Protection Diodes

6. **State the need and advantages of isolation amplifiers.** ***(AU MJ 2014)***

The purpose of an isolation amplifier isn't to amplify the signal. The same signal that is input into the op amp gets passed out exactly the same. This means that output voltage is the same exact as the input voltage, meaning if 10V AC is input into a circuit, 10V AC is output. The purpose of an isolation amplifier is to isolate the circuit which appears before the amplifier from the circuit that appears after it.

Advantages:

High accuracy
Linearity
Wide bandwidth
Easy to use, similar to an op-amp
Ultra-low leakage

7. **What is a switching regulator?** ***(AU MJ 2014)***

Switching regulators are those which operate the power transistor as a high frequency on/off switch, so that the power transistor does not conduct current continuously. This give improved efficiency over series regulators.

8. **Draw the pin diagram of IC 8038.** ***(AU ND 2014)***

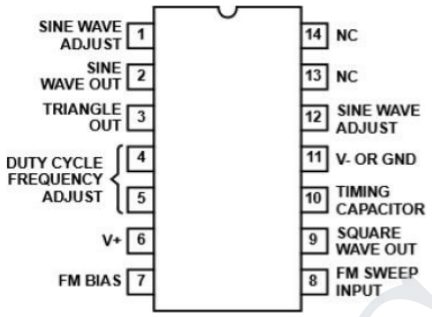

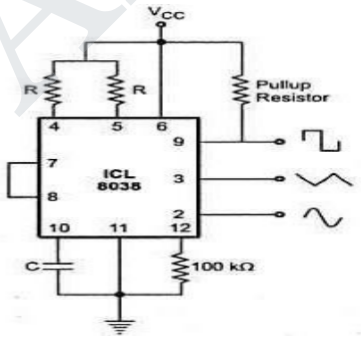

9. **Define load regulation.** ***(AU ND 2013)***

Load regulation is defined as the change in output voltage for a change in load current and is also expressed in millivolts or as a percentage of the output voltage. Typical value of load regulation for 7805 is 15 mV for 5mA < I0 < 1.5 A.

10. **How to define opto-coupler?** ***(AU ND 2013)***

11. An opto coupler, also called opto-isolator, is an electronic component that transfers an electrical signal or voltage from one part of a circuit to another, or from one circuit to another, while electrically isolating the two circuits from each other. It consists of an infrared emitting LED chip that is optically in-line with a light-sensitive silicon semiconductor chip, all enclosed in the same package. The silicon chip could be in the form of a photo diode, photo transistor, photo Darlington, or photo SCR.

The combined package of a LED and a photodiode is called an opto coupler. It is also called an opto isolator or an optically coupled isolator.

12. **What is the principle of switch mode power supplies?** ***(AU MJ 2013)***

A switched-mode power supply (switching-mode power supply, SMPS, or switcher) is an electronic power supply that incorporates a switching regulator to convert electrical power efficiently. Like other power supplies, an SMPS transfer's power from a source, like mains power, the pass transistor of a switching-mode supply continually switches between low-dissipation, full-on and full-off states, and spends very little time in the high dissipation transitions, which minimizes wasted energy. Ideally, a switched-mode power supply dissipates no power.

13. What is an isolation amplifier? ***(AU ND 2012)***

Isolation amplifiers provide electrical isolation and an electrical safety barrier. They protect data acquisition components from common mode voltages, which are potential differences between instrument ground and signal ground. Instruments that are applied in the presence of a common mode voltage without an isolation barrier allow ground currents to circulate, leading in the best case to a noisy representation of the signal under investigation.

14.* Name the various protection circuits used for voltage regulators.** ***(AU ND 2012)

The various protection circuits of voltage regulators are

i. Constant current limiting

ii. Fold back current limiting

iii. Over voltage protection

iv Thermal protection

15. **Why do switching regulators have better efficiency then series regulators?**

(AU ND 2012)

In switching regulators, the transistor is operated in cut off region or saturation region. In cut off region, there is no current and hence power dissipation is almost zero. In the saturation region there is negligible voltage drop across it hence the power dissipation is almost zero.

16.* What are the disadvantages of linear voltage regulators?** ***(AU ND 2011)

The disadvantages of linear voltage regulators are

- The input step down transformer is bulky and the most expensive component of the linear regulated power supply mainly because of low line frequency.
- Because of the low line frequency, larger values of filter capacitors are required to decrease the ripple.
- The efficiency of a series regulator is very low.

17. How will you increase the output of a general purpose op-amp? ***(AU MJ 2010)***

A simple method of increasing the output current of a general purpose op-amp is to connect a power booster circuit in series with the op-amp.

18.* Using LM380 draw the circuit for audio power amplifier.** ***(AU MJ 2010)

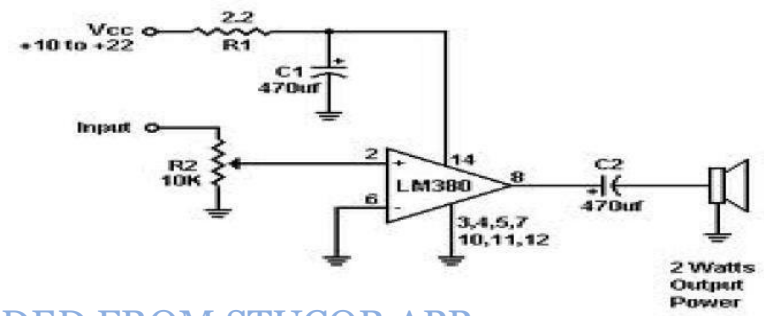

***19.* List the important parts of regulated power supply.**

The parts of regulated power supply are

- Reference voltage circuit
- Error amplifier
- Series pass transistor
- Feedback network

(AU ND 2010)

20. What are the advantages of switch mode power supplies? ***(AU ND 2010)***

The advantages of switch mode power supplies are

- Smaller size
- Lighter weight (from the elimination of low frequency transformers which have a high weight)
- Lower heat generation due to higher efficiency.

21. Draw the circuit diagram of an IC opto coupler. ***(AU MJ 2009)***

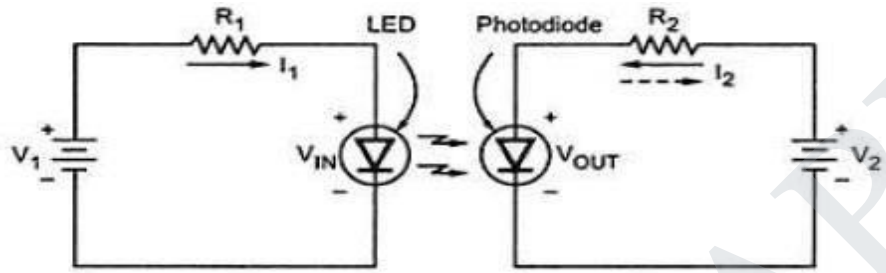

22. What are the advantage switching regulators? ***(AU MJ 2009)***

The advantages switching regulators are

- Greater efficiency is achieved as the power transistor is made to operate as low impedance switch. Power transmitted across the transistor is in discrete pulses rather than as a steady current flow.
- By using suitable switching loss reduction technique, the switching frequency can be increased so as to reduce the size and weight of the inductors and capacitors.

23. **Draw the circuit of LM317 voltage regulator, give the expression for V_0.**

(AU ND 2007)

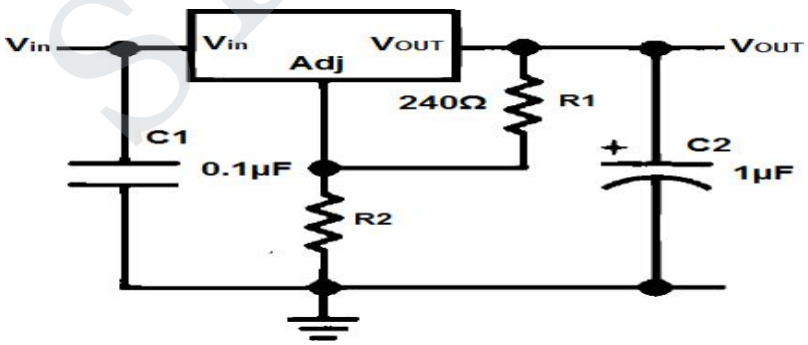

The voltage that the adjustable regulator outputs is determined by the equation below

$$V_{out} = V_{ref}\,(1 + R_L/R_H)$$

$$V_{OUT}=1.25(1+R_2/R_1)+I_{adj}(R_2)$$

24. **What is the need for current limiting in regulated power supplies?** ***(AU ND 2007)***
Current limiting in regulated power supplies is refers to the ability of a regulator to prevent the load current from increasing above a preset value.

25. **What are the drawbacks of simple current limiting and how is it overcome?**

(AU MJ 2007)

The disadvantages of constant current limiting are relatively large power dissipation in the series pass transistor when load terminals are shorted. Thus a large power rating transistor is required.

The power dissipation in the series pass transistor is given by

$$PD= (V_{in}-V_{BE})\ I_{SL}$$

Where V_{BE} =base –emitter voltage of Q1

26. **Write the function of opto coupler. Mention any one of its application.** ***(AU ND 2006)***

Functions :

To isolate one section of a circuit from another, each section having different signal voltage levels to ensure compatibility between them. To prevent electrical noise or other voltage transients that may exist in a section of a circuit from interfering with another section when both sections have a common circuit reference. Noise or voltage transients can be caused by a poor printed circuit board layout.

Applications :

Common applications for optocouplers include microprocessor input/output switching, DC and AC power control, PC communications, signal isolation and power supply regulation which suffer from current ground loops, etc.

In this application, the optocoupler is used to detect the operation of the switch or another type of digital input signal. This is useful if the switch or signal being detected is within an electrically noisy environment. The output can be used to operate an external circuit, light or as an input to a PC or microprocessor.

27. **Differentiate between linear and switching regulators.** ***(AU ND 2006)***

Linear regulations	**Switching regulations**
1. The series pass transistor operates in the active region as a linear devices as switching devices.	1. The series pan transistor operator either at cut-off or at saturation.
2.Since the pass transistor is always in the active region, power dissipation is more.	2.Power dissipation is less
3.The efficiency is less .	3.The efficiency is more.

28. **Mention the advantages of opto-couplers.** ***(AU MJ 2006)***

The advantages of opto-couplers are

- Better isolation between the two stages.
- Impedance problem between the stages is eliminated.
- Wide frequency response.
- Easily interfaced with digital circuit.
- Compact and light weight.
- Problems such as noise, transients, contact bounce, are eliminated.

29. Why current boosting is done in 723 regulators? ***(AU MJ 2006)***

The 723 regulator can give adjustable output voltage in a wide range. It provides short circuit protection and current feedback using external components. The basic regulator can be current boosted with an external pass transistor.

$$I_{load}=\beta_{pass\ transistor} \times I_{o(723)}$$

PART-B

1. What do you mean by the fixed voltage and variable voltage regulator? List its various applications. ***(13)(AU ND 2016)***

2. Write short notes on

   (i) LM380 Power Audio Amplifier. ***(6)(AU ND 2016)***

   (ii) ICL 8038 Function Generator ***(7)(AU ND 2016)***

3. State the advantages of IC voltage . Explain the feature and internal structure of general purpose linear IC723 regulator. Design a regulator using IC 723 to meet the following specifications: V_0=5V; I_0=100mA ;V_{in} =15±20% ;I_{sc}=150mA ;V_{sence}=0.7V. ***(8)(AU ND 2014)***
4. With a neat diagram, explain the working of step down switching regulator. ***(8)(AU ND 2014)***

5. With a neat functional diagram, explain the operation of LM380 power amplifier. ***(8)(AU ND 2014)-2***

6. Explain the operation of SMPS with neat diagrams. ***(8)(AU ND 2014)-2***

7. Design a voltage regulator using IC723 regulator to satisfy the following specifications. (i)V_0=12V,
   (ii) I_0=500mA

   (iii) V_{in}= 18±20%,

   (iv)I_{sc}=600mA

   (v)V_{sence}=0.7V. Give the complete schematic diagram. (Assume and justify if any data required) ***(16)(AU MJ 2014)***

8. Discuss in detail the operation and applications of the following circuits. ***(8)(AU MJ 2014)-3***

   (i) Isolation amplifier

   (ii) Optocoupler

9. What are IC voltage regulators? Explain the principle of operation of IC LM317 as a voltage regulator. ***(16)(AU MJ 2014)***

10. Draw and explain the functional diagram of 723 general purpose regulators and make the necessary changes to make it as low voltage regulator and high voltage regulator. ***(16)(AU ND 2013)***

11. Design an adjustable voltage regulator (5V to 15V) with a short circuit current limit of

50MA using a 723 regulator. ***(16)(AU ND 2013)***

12. Design a 4 bit R-2R ladder network, determine the size of each step if R=10kΩ, R_f=40kΩ and V_{cc}= + or – 15V. Calculate the output voltage for D_o=1, D_2=1, D_3=1 if bit '1' applied as 5V and bit '0' applied as 0V. ***(16)(AU MJ 2013)***

13. Write short notes on : ***(16)(AU ND 2012)***

(i) Switching regulator.
(ii)Power amplifier.

14. Draw the functional diagram of ICL 8038 function generator IC and explain its operation.

(16)(AU ND 2011)

15. Draw the circuit of series voltage regulator. Design this circuit to operate from a supply of 20V and to provide an output of 12V with the maximum load current of 40mA.

(16)(AU ND 2011)

16. What is a switching regulator? With neat block diagram explain the internals of μA 7840.

(16)(AU ND 2010)

17. (i) Briefly explain protection circuits in voltage regulators. ***(8)(AU ND 2009)***

(ii) Write short note on LM 380 audio power amplifier. ***(8)(AU ND2009)***

18. Draw the circuit diagram and explain the operation of any one negative voltage regulator.

(8)(AU ND 2009)

19. Discuss on the different types of three terminal voltage regulators. ***(8)(AU ND 2009)***

20. Draw the circuit diagram of IC723 based positive voltage regulator, to give +8V output at 200mA .Incorporate short circuit protection current limit circuit to operate at 400mA . Find all resistor values, calculate their wattage and specify the types of resistors.

(8)(AU ND 2006)