EE6501 – POWER SYSTEM ANALYSIS

UNIT-I POWER SYSTEM

PART A

1. **What is Power system? (K)**

   An electrical power system is a network of electrical components which supplies the generated power to the consumers

2. **What are the principle components of electrical power system? (U)**

   The various components of electrical Power system consists of Generation, Transmission and Distribution.

3. **What is power system analysis? (K)**

   The evaluation of power system using various methods like load flow study, short circuit study and stability study is called as power system analysis.

4. **What are the need of power system analysis in planning and operation of power system. (E)**

   - To monitor the voltage at various buses, real and reactive power flow between buses.
   - To design the protective devices
   - To plan future expansion of the existing system
   - To analyze the system under different fault conditions
   - To study the ability of the system under small and large disturbances (Stability studies)

5. **What are the steps involved in Power system studies?(A)**

   The various steps in planning and operational studies are:

   - Planning of power system
   - Implementing the system
   - Monitoring the system
   - Corrective actions under considerable deviations
   - Planning the system under undesirable deviations

6. **Define load flow analysis.(A)**

   Determining the power flow solution of the power system under the steady state condition is called as load flow analysis. The voltage magnitude , real power, phase angle of the voltage and reactive power of the buses are determined.

7. **Define short circuit Analysis.(U)**

   When fault occurs in the system the current increases manifolds and causes abnormalities. Inorder to avoid the abnormalities protective devices are used. The protective devices are designed based on the fault current and fault MVA determined from the fault analysis. Therefore fault analysis is the determination of Fault Current and fault MVA under various faulty conditions.

8. **What is Power system stability?(E)**

   The ability of the power system to regain synchronism under various disturbances is called as stability. The stability study consists of transient, dynamic and steady state stability analysis.

9. **What are the basic components of power system?(K) (May/ June 2012)**

   The components of power system are Generators, loads, transmission lines, transformers, circuit breaker, busbar, etc.. The transformer may be an isolation transformer, two winding transformer or three winding transformer. The loads includes lighting load, Motor load, Heating load etc.

10. What are the various models of the transmission line?(U)

The transmission line models are short transmission line model, medium transmission line model and long transmission line model. The medium transmission line models are π model, T-model and end condenser model.

11. Draw the Π representation of a transformer with off nominal tap ratio ' α'. (K) (May/ June 2009, Nov/ Dec 2009, May/ June 2009)

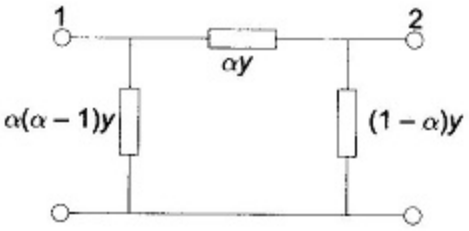

12. What is single line diagram? (K) (May/ June 2009, Nov/ Dec 2011, 2015)

A single line diagram is a pictorial representation of the power system in which each components are represented by their standard symbols and interconnection between them are shown by a straight lines. For simplification the neutral is omitted and the ratings are mentioned near the symbol of it. The single line diagram varies according to the type of study. For example the position of circuit breakers are important in fault analysis but not in load flow analysis.

13. What is the use of single line diagram? (K)

Every component are represented with its standard symbol and the connections are represented by line. So a concise knowledge about the power system can be obtained from the single line diagram.

14. Draw a sample single line diagram.(U)

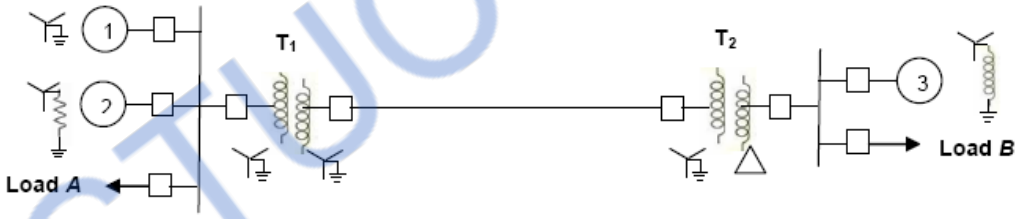

15. Define per phase analysis. (K)

Analyzing an balanced power system by considering one of the three phase lines and neutral is called as per phase analysis

16. What is impedance diagram?(R)

The impedance diagram is the equivalent circuit of power system in which the various components of power system are represented by their equivalent impedances. The magnetizing reactance of the transformer, shunt capacitance and neutral grounding are neglected. The impedance diagram is used for load flow studies.

17. What are the approximations made in impedance diagram? (K)

i. The neutral reactance are neglected.
ii. The shunt branches in equivalent circuit of transformers are neglected.
iii. Shunt capacitances are neglected.

18. Draw an impedance diagram for the power system given below.(U)

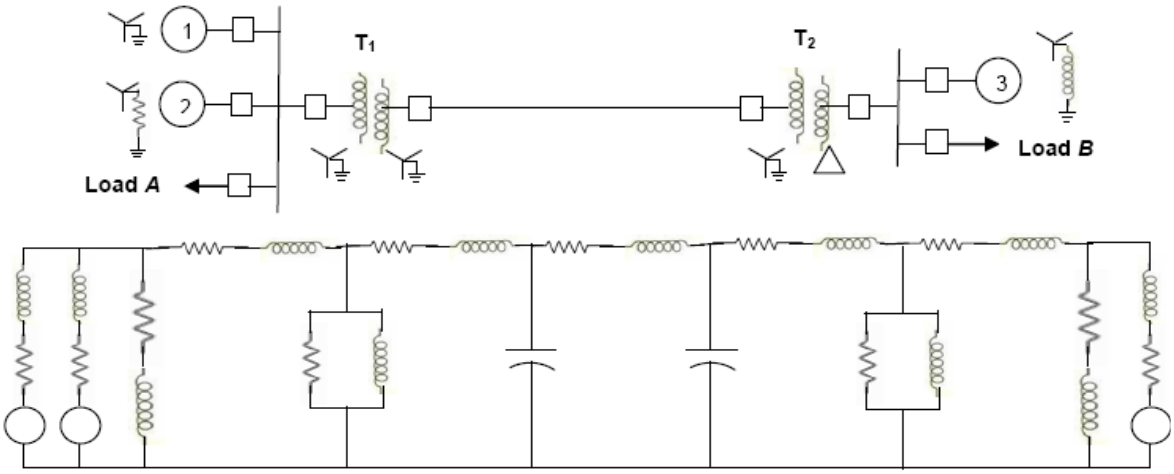

19. What is reactance diagram? (K)

The reactance diagram is the simplified equivalent circuit of power system in which the various components of power system are represented by their equivalent reactance. The reactance diagram can be obtained from impedance diagram if all the resistive components are neglected. The reactance diagram is used in the fault analysis.

20. What are the approximations made in reactance diagram? (k)

i. The neutral reactance are neglected.
ii. The shunt branches in equivalent circuit of transformers are neglected.
iii. The resistances are neglected.
iv. All static loads are neglected.
v. The capacitance of transmission lines are neglected.

21.How are loads represented in reactance and impedance diagram.

(K)(Nov/ Dec 2011, 2016)

The load is represented by impedance in the impedance diagram and by a reactance in the reactance diagram.

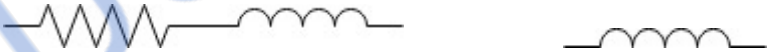

22. Define per unit value of an electrical quantity. (K)

(May/ June 2009, Nov/ Dec 2009, 2015)

The per unit value of any quantity is defined as the ratio of the actual value of that quantity to an arbitrary selected value of that quantity. The arbitrary value is called as the base value. The per unit value is dimensionless..

$$Per\ unit\ value = \frac{Actual\ value}{Base\ value}$$

23. What are the advantages of per unit system? (K)

(Nov/ Dec 2016, April/ May 2011)

i. Per unit data representation yields valuable relative magnitude information.
ii. Circuit analysis of systems containing transformers of various transformation ratios is greatly simplified.
iii. Manufacturers usually specify the impedance values of equivalent in per unit of the equipments rating. If the any data is not available, it is easier to assume its per unit value than its numerical value.
iv. The per unit value of the transformer is same on both the sides of the transformer.

v. The circuit laws are valid in p.u systems, and the power and voltages equations are simplified since the factors of √3 and 3 are eliminated.

vi. The p.u systems are ideal for the computerized analysis and simulation of complex power system problems

24. What is the need for base values? (U)

The components of the power system are represented with various ratings like voltage, current, MVA etc.. It will be convenient for analysis if all the rating are expressed with reference to the base value.

25. Define base current. (K)

Base current is defined as the ratio of base power (MVA) to base voltage KV.

$$Base\ current = \frac{Base\ MVA}{Base\ KV}$$

26. Write the equation for base impedance with respect to three phase system. (K) (May/ June 2009, 2016)

$$Base\ Impedance = \frac{(Base\ KV)^2}{Base\ MVA}$$

26. What is per unit impedance? (K) (May/ June 2016)

$$Per\ unit\ impedance = \frac{Actual\ impedance}{Base\ impedance}$$

27. What is the relation between percentage value and per unit value? (K)

The ratio in percentage is 100 times the p.u value

28. Write the equation transformation base KV on LV side.(K)

$$\text{BAse KV on HT side} = \text{BAse kV on LT side X}\frac{\text{HV rating of the transformer}}{\text{LV rating of the transformer}}$$

29. Write the equation for per unit impedance if change of base occurs. (K)

$$Z_{p.u,new} = Z_{p.u,old} \times \left[\frac{Base\ KV_{old}}{Base\ KV_{new}}\right]^2 \times \left[\frac{Base\ MVA_{new}}{Base\ MVA_{old}}\right]$$

30. A generator rated at 30MVA, 11KV has a reactance of 20%.Calculate its per unit reactance for a base of 50 MVA and 10KV. (A) (Nov/Dec 2011)

$MVA_{new} = 50$

$KV_{new} = 10$

$MVA_{old} = 30$

$KV_{old} = 11$

$X_{p.u} = 20\% = 20/100 = 0.2$ p.u

$$X_{p.u,new} = X_{p.u,old} \times \left[\frac{Base\ KV_{old}}{Base\ KV_{new}}\right]^2 \times \left[\frac{Base\ MVA_{new}}{Base\ MVA_{old}}\right]$$

$$X_{p.u,new} = j0.2 \times \left[\frac{11}{10}\right]^2 \times \left[\frac{50}{30}\right] = j0.4033\ \ p.u$$

31. What is the new p.u impedance if the new base MVA is twice the old base MVA? (A)

$$MVA_{new} = 2\ MVA_{old}$$

$$Z_{p.u,new} = Z_{p.u,old} \times \left[\frac{Base\ KV_{old}}{Base\ KV_{new}}\right]^2 \times \left[\frac{Base\ MVA_{new}}{Base\ MVA_{old}}\right]$$

$$Z_{p.u,new} = Z_{p.u,old} \times \left[\frac{Base\ KV_{old}}{Base\ KV_{new}}\right]^2 \times \left[\frac{2\ Base\ MVA_{old}}{Base\ MVA_{old}}\right]$$

$$Z_{p.u,new} = 2\ Z_{p.u,old} \times \left[\frac{Base\ KV_{old}}{Base\ KV_{new}}\right]^2$$

32. If the reactance is 50 ohms, find the p.u value for a base of 15 KVA and 10 KV. (A) (May/ June 2012)

$$Base\ Re\,ac\tan ce, X_b = \frac{Kv_b^2}{MVA_b} = \frac{10^2}{15*10^{-3}} = 666.66$$

$$P.uvalue = \frac{X}{X_b} = \frac{50}{666.66} = 0.075\,p.u$$

33. Draw the impedance diagram for the given single line representation of the power system. (A)

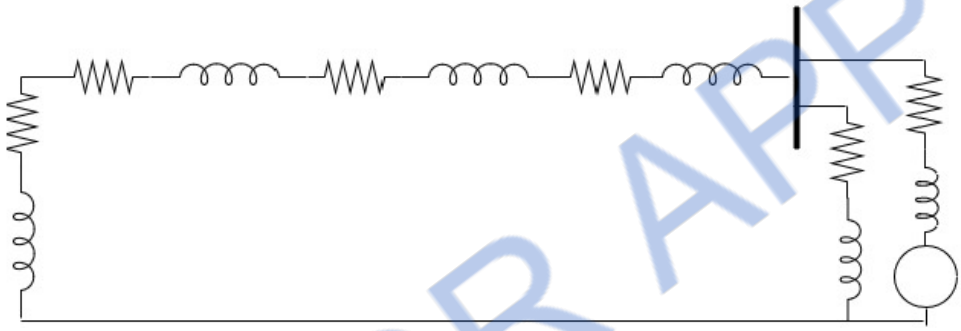

34. Why the neutral grounding impedance Zn appears as 3Zn in zero sequence equivalent circuit? (U)

The zero sequence current is 3 times of the current so the impedance is referred as 3Zn.

35. What is bus admittance matrix? (K)

The matrix consisting of the self and mutual admittance of the network of the power system is called bus admittance matrix (**Y_{bus}**).

36. What are the methods available for forming bus admittance matrix? (K)

- Direct method or inspection method.
- Singular transformation method.

37. What are the properties of admittance matrix? (E)

i. If the number of buses is n, then the size of the admittance matrix is n x n matrix.
ii. The diagonal element of the admittance matrix is the short circuit driving point or self admittance at the ith bus.
iii. The off diagonal elements are the short circuit transfer admittance or neutral admittance.
iv. It is a symmetrical matrix.
v. The admittance matrix is a sparse matrix if the off diagnal elements have more number of zeroes.

38. What is the use of admittance matrix?(U)

Admittance matrix is used in the Load flow study.

39. Write the equations for the elements of Y-bus when an element of admittance Y is added across the buses i and j.(R)

The elements Y_{ii}, Y_{ii}, Y_{ii} and Y_{ii} changes as

$Y_{iinew} = Y_{ii} + Y$

$Y_{ijnew} = Y_{ij} - Y$

$Y_{jinew} = Y_{ji} - Y$

$Y_{jjnew} = Y_{jj} + Y$

40. Write the equations for the elements of Y-bus when an element of admittance Y is removed across the buses i and j.(R)

The elements Y_{ii}, Y_{ii}, Y_{ii} and Y_{ii} changes as

$Y_{iinew} = Y_{ii} - Y$

$Y_{ijnew} = Y_{ij} + Y$

$Y_{jinew} = Y_{ji} + Y$

$Y_{jjnew} = Y_{jj} - Y$

41. Write the equations for the elements of Y-bus when a shunt element of admittance Y is added at bus i.(R)

$Y_{iinew} = Y_{ii} + Y$

42. Write the equations for the elements of Y-bus when a node is eliminated.

When a node n is eliminated,

$$Y_{ijnew} = Y_{ij} - \frac{Y_{in}Y_{jn}}{Y_{nn}}$$

where, $i = 1,2,3, \ldots n$, $i \neq n$

$j = 1,2,3, \ldots n$, $j \neq n$

43. Define primitive network.(U)

If a network has both active and passive elements then it is called as a primitive network

44. Define Graph .(E)

Graph is a representation of network obtained by replacing every element of the network by a line segment and every bus by a node.

45. Define primitive admittance matrix.(A)

Matrix which contains information about the transmission line admittance is called as a primitive admittance matrix.

PART(B &C)

1. Explain the modeling of generator, load, transmission line and transformer for power flow, short circuit and stability studies. **(U)**

2. Draw the per unit rea[illegible]e diagram for the power sys[illegible] shown below. Neglect resistance and use a base of 100MVA, [illegible]KV in 50 ohms line. The ra[illegible] of the generator, motor and transformers are: (A)

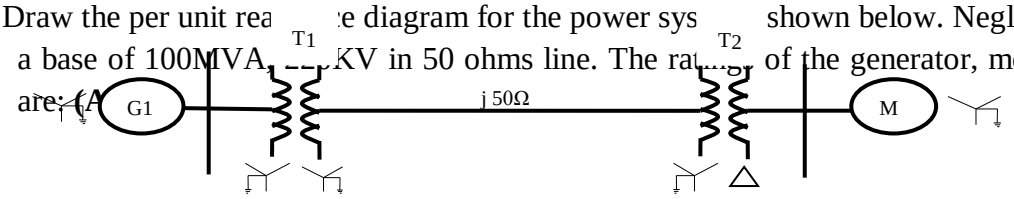

G: 40MVA, 25KV, X'' = 20%

M: 50MVA, 11KV, X'' = 30%

T_1: 40MVA, 33 Y/ 220Y KV, X = 15%

T_2: 30MVA, 11 Δ / 220Y KV, X = 15%

Load: 11KV, 50MW+j68 MVAR

3. Draw the reactance diagram using a base of 50MVA and 13.8KV on generator G_1. **(A)**

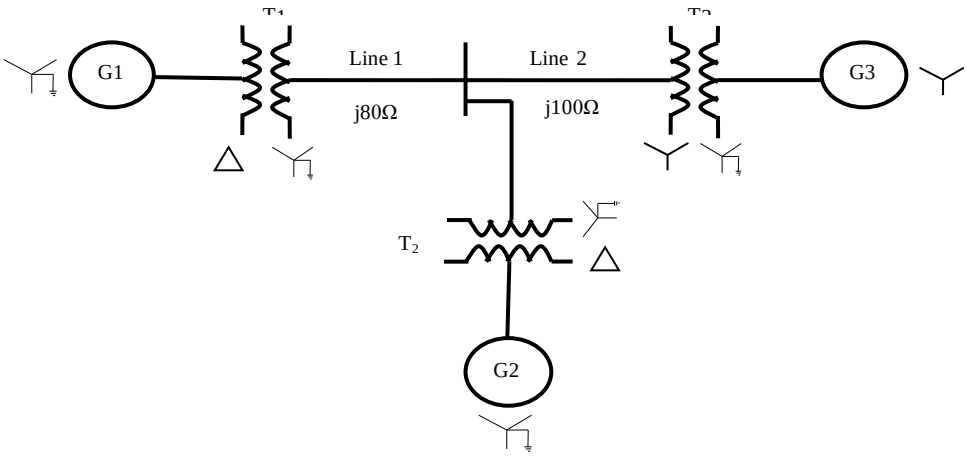

G_1: 20MVA, 13.8KV, X''=20% ; G_2: 30MVA, 18.0KV, X''=20%
G_3: 30MVA, 20.0KV, X''=20% ; T_1: 25MVA, 220/13.8 KV, X=10%
T_2:3Single phase unit each rated 10MVA, 127/18 KV, X =10%
T_3: 35MVA, 220/22 KV, X =10%

4. A simple power system is shown in fig. Redraw this system where the per unit impedance of the components are represented on a common 5000 VA base and common system base voltage of 250V. **(A)**

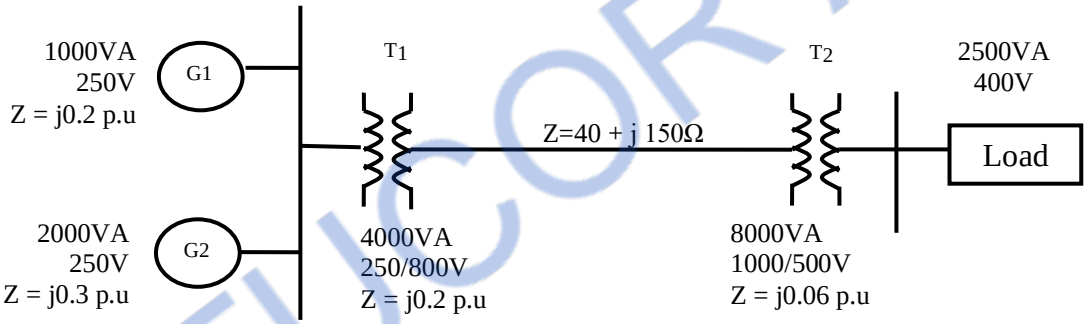

5. The single line diagram of a three phase power system is shown in fig. Select a common base of 100MVA and 13.8KV on the generator side. Draw per unit impedance diagram. **(A)**

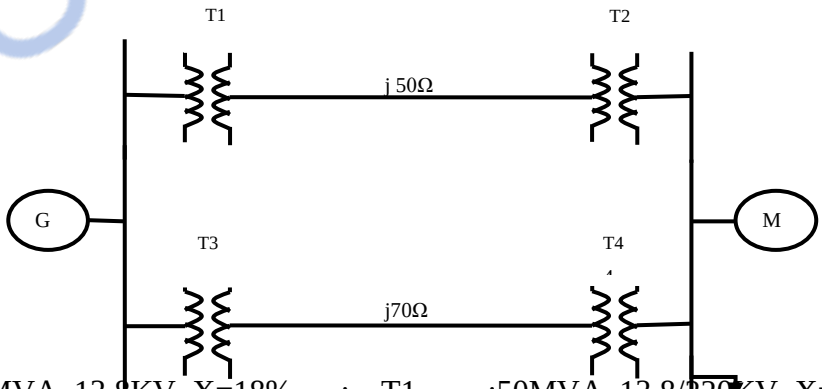

G: 90MVA, 13.8KV, X=18% ; T1 :50MVA, 13.8/220KV, X=10%
T2:50MVA, 220/11KV, X=10% ; T3 :50MVA, 13.8/132KV, X=10%
T4:50MVA, 132/11KV, X=10% ; M : 80MVA, 10.45KV, X=20%
LOAD: 57MVA, 0.8 p.f lagging at 10.45 KV ;

6. The one line diagram of a three phase power system is shown in figure. Select a common base of 100 MVA and 22 KV on the generator side. Draw an impedance diagram with all impedance including the load impedance marked in per unit. The manufacturer's data for each device is given as follow: **(A)**

G: 90 MVA 22KV X=18%
T1: 50 MVA 22/220KV X=10%
T2: 40 MVA 220/11KV X=6.0%
T3: 40 MVA 22/110KV X=6.4%
T4: 40 MVA 110/11KV X=8.0%
M: 66.5 MVA 10.45 KV X=18.5%

The three phase load at bus 4 absorbs 57MVA, 0.6 power factor lagging at 10.45 KV. Line 1 and Line 2 have reactance of 48.4 and 65.43 ohms respectively.

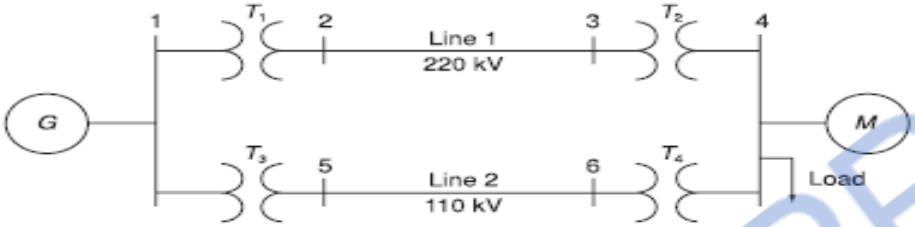

7. The single line diagram of an unloaded power system is shown in fig. Reactances of the two sections of the transmission line are shown on the diagram. The generator and transformers are rated as follows: **(A)** **(Nov/Dec 2015)**

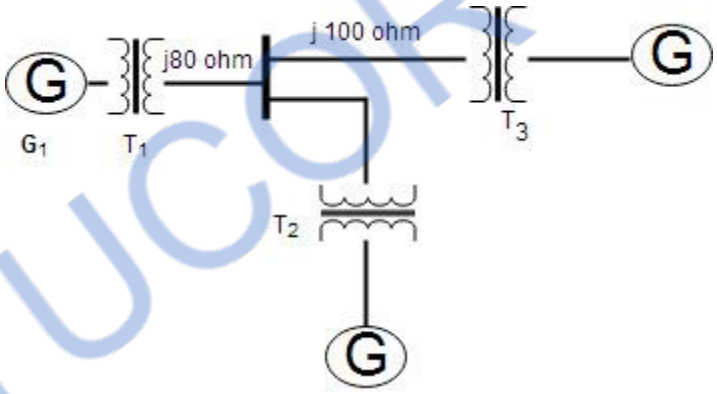

Generator G1: 20 MVA, 13.8 KV, X" = 20%
Generator G2: 30 MVA, 18.0 KV, X" = 20%
Generator G3: 30 MVA, 20.0 KV, X" = 20%
Transformer T1 : 25 MVA, 220 Y / 13.8 Δ KV, X = 10%
Transformer T2 :3 single phase units each rated at : 10 MVA, 127/18 KV, X = 10%
Transformer T3: 35 MVA, 220 Y / 22 Y KV, X = 10%
Draw the reactance diagram using a base of 50 MVA and 13.8 KV on generator G1.

8. Explain the need for system analysis in planning and operation of power system. Discuss about per phase analysis of symmetrical three phase system. **(U)**

9. Draw the structure of an electrical power system and describe the components of the system with typical values.**(U)**

10. Draw the reactance diagram using a base of 100 MVA, 220 KV in 50 ohm line. **(A)**

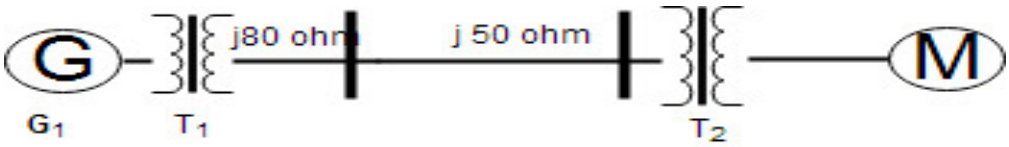

Generator	: 40 MVA, 25 KV, X" = 20%, Star Grounded
Transformer	: 50 MVA, 11 KV, X" = 20%, Star Star Grounded
Star – Star transformer	: 40 MVA, 33 / 220 KV, X = 15%
Star – Delta transformer	: 30 MVA, 11 / 220 KV, X = 15% (16)

11. A 120 MVA, 19.5 KV generator has a synchronous reactance of 0.15 p.u and it is connected to a transmission line through a transformer rated 150 MVA, 230/18 KV (star/delta) with X = 0.1 p.u. Calculate the p.u reactance by taking generator rating as a base values. Calculate the p.u reactance by taking transformer rating as a base values. Calculate the p.u reactance for a base value of 100 MVA and 220 KV on H.T side of transformer. **(A)**

12. For the network shown in fig. form the bus admittance matrix. Determine the reduced admittance matrix by eliminating node 4.**(A)**

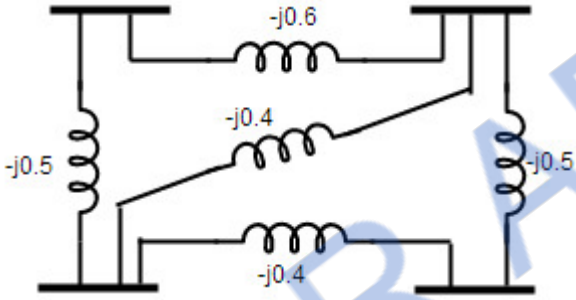

13. Using Singular transformation method, Determine Y_{BUS} for the network shown in Fig. Where the impedance labeled in p.u. **(A)**

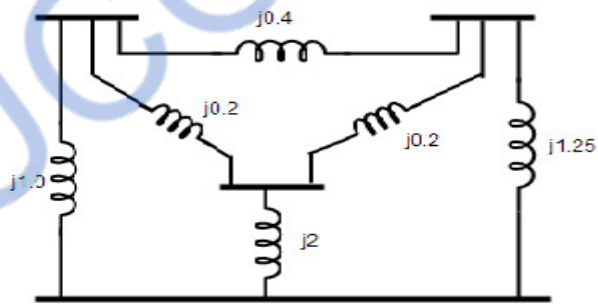

14. Explain the formation of Y_{BUS} by Singular transformation with one example. **(U)**

15. Derive the Π – model for a transformers with off - nominal tap – ratio 'α'. **(C)**

(May/ June 2016)

16. The parameters of a 4-bus systems are as under: **(Nov/ Dec 2016)**

Line Starting bus	Line ending bus	Line impedance	Line charging admittance
1	2	0.2+j0.8	j0.02
2	3	0.3+j0.9	j0.03
2	4	0.25+j1	j0.04
3	4	0.2+j0.8	j0.02
1	3	0.1+j0.4	j0.01

Draw the network and find the bus admittance matrix. **(A)**

17. Find Y_{BUS} for the data given below: **(A)**

Line	R	X
1-2	0.05	0.15
1-3	0.10	0.30
2-3	0.15	0.45
2-4	0.10	0.30
3-4	0.05	0.15

18. Find out the Y matrix of the sample power system as shown in fig. Data for this system is given in table. **(AP)**

Bus Code	Impedance	Line Charging admittance
1-2	0.02+j0.06	j0.03
1-3	0.08+j0.24	j0.025
2-3	0.06+j0.18	j0.02

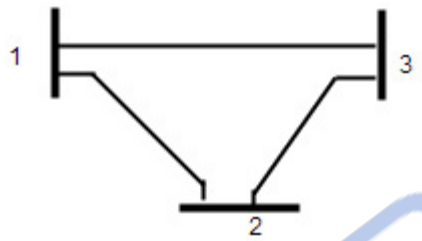

19. Consider the system shown in fig. It shows a transmission network with impedance of transmission lines all in p.u as shown. Compute Y_{bus} matrix. **(AP)**

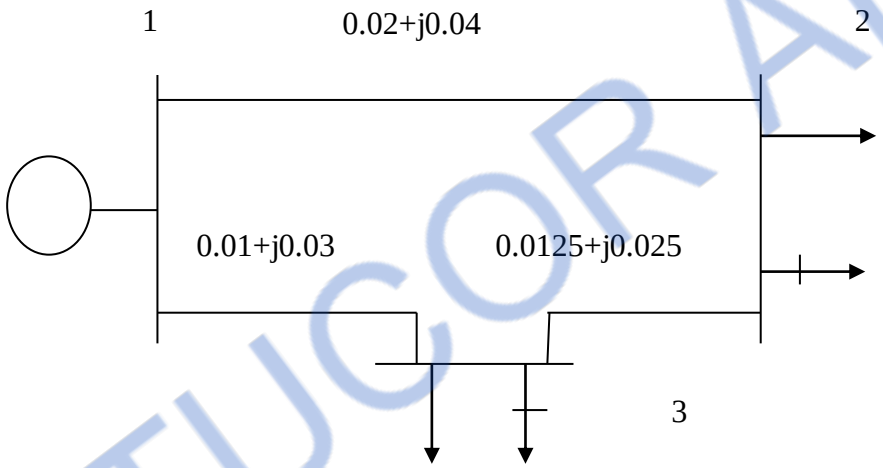

20. Find the bus admittances matrix for the system. Use the values of 220 KV and 100 MVA as base quantities. Express all impedances and admittance in per unit it is given that all the lines are characterized by a series impedances of 0.1+j0.7 ohm/km and shunt admittance of j0.35 ×10-5 mho/km. lines are rated at 220 KV. **(AP)**

21. Determine the Ybus matrix by inspection method for the line specification as mentioned below: **(A)** **(May/ June 2016)**

Line p-q	Impedance in p.u	Half Line charging admittance in p.u
1-2	0.04+j0.02	j0.05
1-4	0.05+j0.03	j0.07
1-3	0.025+j0.06	j0.08
2-4	0.08+j0.015	j0.05
3-4	0.035+j0.045	j0.02

22. Prepare a per phase schematic of the system shopwn in Fig. and show all the impedances in per unit on a 100 MVA, 132 Kv base in the transmission line circuit. The necessary data are given as follows: **(C)** **(Nov/ Dec 2016)**

G1: 50 MVA, 12.2 kV, X= 0.15 p.u
G2: 20 MVA, 13.8 kV, X= 0.15 p.u
T1: 80 MVA, 12.2/161 kV, X= 0.1 p.u
T2: 40 MVA, 13.8/ 161 KV, X= 0.1 p.u
Load: 50 MVA, 0.8 p.f lagging operating at 154 kV

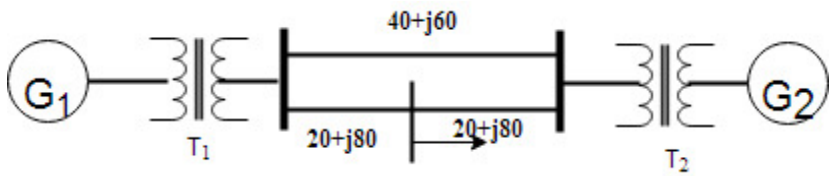

23. The data for the system whose single line diagram shown in Figure is as follows: **(A)** **(May/ June 2016)**

G1: 30 MVA, 10.5 KV, X''=1.6 ohms
G2: 15 MVA, 6.6 kV, X''=1.2 ohms
G3: 25 mVA, 6.6 kV, X''= 0.56 ohms
T1: 15 MVA, 33/11 kV, X= 15.2 ohms/Phase on H.T side
T2: 15 MVA, 33/6.2 kV, X=16.0 ohms/phase on L.T side
Tansmission line : 20.5 ohms/phase
Loads A : 40 Mw, 11 kV, 0.9 p.f lagging
B : 40 Mw, 6.6 kV, 0.85 p.f lagging

Choose the base power as 30 MVA and approximate bas voltages for different parts. Draw the reactance diagram. Indicate p.u reactance on the diagram.

24. Form Ybus of the test system shown in Fig using singular transformation method. The impedance data is given in the table. Take (1) as reference node. **(AP)** **(Nov/ Dec 2015)**

Element No.	Self		Mutual	
	Bus code	Impedance	Bus Code	Impedance
1	1-2	0.5	1-2	0.1
2	1-3	0.6		
3	3-4	0.4		
4	2-4	0.3		

UNIT-II POWER FLOW ANALYSIS
PART A

1. **What is a bus? (K)**
   The meeting point of various components in a power system is called a bus. The bus is a conductor made of copper or aluminium having negligible resistance. At some of the buses power is being injected into the network, whereas at other buses it is being tapped by the system loads.
2. **What is power flow study or load flow study? (K)**
   Power flow analysis is a basic tool which is performed under the steady state condition. The load flow study is used to determine the various voltages, real power and reactive in the system.
3. **What are the information's that are obtained from a load flow study? (K)**
   The information obtained from a load flow study are:
   a. Magnitude and phase angle of voltages,
   b. Real and reactive power flowing in each line and
   c. Line losses.
   d. Initial conditions of the system when the transient behavior of the system is to be studied.
4. **What is the need for load flow study? (K) (Nov/Dec 2015, May/ June 2016)**
   Load flow study is important for:
   i. Planning, operation , economic scheduling and controlling.
   ii. Analyzing the losses, stability and security of the power system.
   iii. Identifying the overloaded and under loaded lines, buses and transformers.
   iv. Identifying the optimal location of the capacitors.
   v. Committing the units without violating the operating limits.
5. **What are the quantities associated with each bus in a system? (K)**
   A bus in a power system is associated with four quantities.
   They are:
   i. Real power (P)
   ii. Reactive power (Q)
   iii. Magnitude of voltage (V)
   iv. Phase angle of voltage (δ).
6. **State the ideal load flow problem.**
   For a network with the line impedance and half line charging admittances and the power injection the state vector X is defined as
   $X = [V_1\ V_2\ V_3 \ldots V_n\ \delta_1\ \delta_2\ \delta_3 \ldots \delta_n]$
   where, $V_1\ V_2\ V_3 \ldots V_n$ are the voltages
   $\delta_1\ \delta_2\ \delta_3 \ldots \delta_n$ are the angles at all the buses
   By knowing the voltages and angles at all the buses, the slack bus power, power flow and power loss in the transmission line can be obtained.
7. **What are the different types of buses in a power system? Or how the buses are classified and what are its types? (A) (May/ June 2016)**

Types of bus	Known or specified quantities	Unknown quantities or quantities to be determined
Slack or Swing or Reference bus	V, δ	P,Q
Generator or Voltage control or PV bus	P, V	Q, δ
Load or PQ bus	P, Q	V, δ

8. **What is the need for slack bus? (U) (Nov/ Dec 2016)**

The system power loss is initially unknown and network powe flow cannot be fixed in advance. So a generator bus with larger rating is fixed as a slack bus or a swing bus. The power generated by the slack bus is the difference between the power injected into the system at other buses and the power used at various buses.

9. **Write the power flow equation in polar form.(K)**

$$\text{Real Power}, P = |V_i| \sum_{x=1}^{n} |Y_{ix}||V_x| \cos(\delta_i - \gamma_{ix} - \delta_x)$$

$$\text{Reactive Power}, Q = |V_i| \sum_{x=1}^{n} |Y_{ix}||V_x| \sin(\delta_i - \gamma_{ix} - \delta_x)$$

10. **Why do we go for iterative methods to solve load flow problems? (U)**

The load flow equations are non linear algebraic equations and so explicit solution as not possible. The solution of non linear equations can be obtained only by iterative numerical techniques.

11. **What are the methods mainly used for solution of load flow study? (K)**

The various methods for solving the load flow problem are:

i. Gauss seidal method
ii. Newton Raphson method
iii. Fast decouple method

12. **What do you mean by a flat voltage start? (K)**

The initial voltages of all buses except slack bus assumed as 1+j0 p.u. This is referred to as flat voltage start.

13. **Discuss the effect of acceleration factor in load flow study. (A)**

Acceleration factor is used in gauss seidal method of load flow solution to increase the rate of convergence or to reduce the number of iterations. The acceleration factor is normally chosen as between 1.3 and 1.7.

14. **When the generator buses are treated as load bus.(U) (A)(Nov/Dec 2015)**

If the reactive power constraints of a generator bus violates the specified limits then the generator is treated as load bus.

15. **What are the advantages of Gauss seidal method? (K)**

The advantages of Gauss seidal method are:

i. Reliable
ii. Calculations are simple and so the programming task is less.
iii. The memory requirement is less.
iv. Linea r convergence characteristics

16. **What are the disadvantages of Gauss seidal method? (K)**

The disadvantages of Gauss seidal method are:

i. Speed of convergence is slow
ii. Not suitable for large systems.
iii. Convergence time increases with size of the system

17. **How approximation is performed in Newton-Raphson method? (K)**

In Newton-Raphson method, the set of nonlinear simultaneous (load flow) equations are approximated to a set of linear simultaneous equations using Taylor's series expansion and the terms are limited to first order approximation

18. **What is Jacobian matrix? How the elements of Jacobian matrix are computed? (K) (Nov/ Dec 2016)**

The matrix formed from the first derivatives of load flow equation is called Jacobian matrix and it is denoted by J.

The elements of Jacobian matrix will change in every iteration the elements of the Jacobian matrix are obtain matrix are obtained by partially differentiating the load flow equation with respect to a unknown variable and then evaluating the first derivatives using the solution of previous iteration .

19. What are the advantages of N.R method? (K)

i. Speed of convergence is faster
ii. More reliable
iii. Not dependant on size
iv. Results are accurate
v. Require less number of iterations
vi.

20. What are the disadvantages of N.R method? (K)

i. Programming is more complex
ii. Requires more memory

21. Compare Gauss seidel and Newton raphson methods of load flow study. (A)

S.No	Gauss Seidal Method	Newton Raphson Method
1	Require large number of iterations to reach convergence.	Require less number of iterations to reach convergence.
2	Computation time per iteration is less	Computation time per iteration is more
3	It has linear convergence characteristics	It has quadratic convergence characteristics
4	The number of iterations required for convergence increases with size of the system	The number of iterations are independent of the size of the system
5	Less memory requirements.	More memory requirements.

PART (B & C)

1. Derive static load equations for 'n' bus system.**(C)**

2. The figure below shows the one line diagram of a simple three bus power system with generators at buses 1 and 3. The magnitude of voltage at bus 1 is adjusted to 1.05 .u. voltage magnitude at bus 3 is fixed at 1.04 p.u with a real power generation of 200 MW. A load consisting of 400 MW and 250 MVAR is taken from bus 2. Line impedances are marked in per unit on a 100 MVA base, and the line charging susceptances are neglected. Obtain the power flow solution by the gauss seidal method at the end of first iteration. (**AP**) **(Nov/ Dec 2016)**

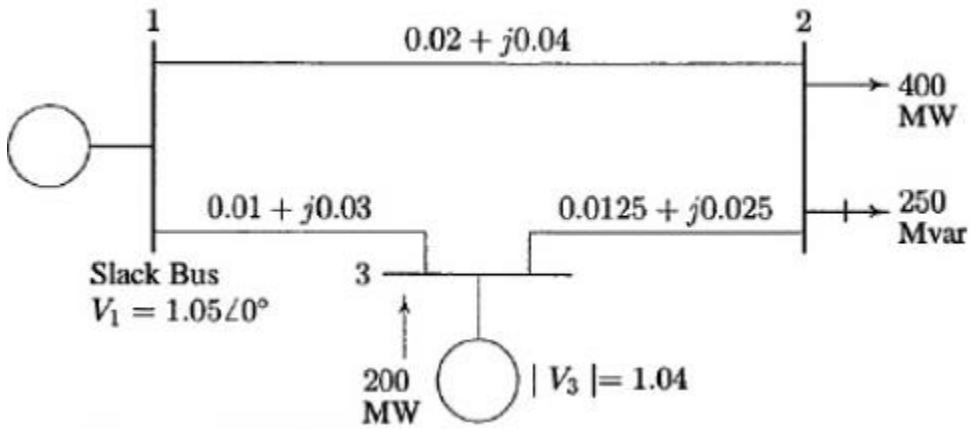

3. Explain load flow algorithm using Gauss – Seidal method with flow chart and discuss the disadvantages of the method. **(U)**

(OR)

Draw the flow chart and explin the algorithm of Newton Raphson iterative method when the system contains all types of buses.

(May/ June 2016)

(OR)

Draw and explain the step by step procedure of load flow solution for the Gauss seidal method when PV buses are present.

(Nov/ Dec 2015)

4. With a neat flow chart, explain the computational procedure for load flow solution using Newton Raphson method when the system contains all types of buses. **(U)** **(May/ June 2016, Nov/ Dec 2016)**

5. The system data for a load flow solution are given in tables. Determine the voltages at the end of the first iteration using the Gauss seidal method. Take α =1.6.**(AP)** **(Nov/ Dec 2015)**

Bus Code	Admittance
1-2	2-j8.0
1-3	1-j4.0
2-3	0.666-j2.664
2-4	1-j4.0
3-4	2-j8.0

Bus Code	P in p.u	Q in p.u	V in p.u	Remarks
1	-	-	1.06	Slack
2	0.5	0.2	1+j0.0	PQ
3	0.4	0.3	1+j0.0	PQ
4	0.3	0.1	1+j0.0	PQ

6. The following is the system data for a load flow solution:

Bus Code	Admittance
1-2	2.0-j8.0
1-3	1.0-j3.0
2-3	0.6-j2.0
2-4	1.0-j4.0
3-4	2.0-j8.0

The schedule of active and reactive power is:

Bus No.	P	Q	V	Remarks
1	-	-	1.0+j0.0	Slack
2	0.5	0.2	1.0+j0.0	PQ
3	0.4	0.3	1.0+j0.0	PQ
4	0.3	0.1	1.0+j0.0	PQ

Determine the voltage at the end of first iteration Using Gauss Seidal method. Take acceleration factor = 1.4. **(AP)**

UNIT- III SYMMETRICAL FAULT ANALYSIS

PART A

1. What is meant by a fault? (K) A fault in a circuit is any failure which interferes with the normal flow of current. The faults are associated with abnormal change in current, voltage and frequency of the power system.

2. Why faults occur in a power system? (K) (Nov/Dec 2015)

The faults occur in a power system due to

- Insulation failure of equipment
- Flashover of lines initiated by a lighting stroke
- Due to permanent damage to conductors and towers or due to accidental faulty operations.

3. List the various types of faults. (K)

OR

How are shunt and series faults classified. (Nov/ Dec 2016)

- Series fault or open circuit fault
  - One open conductor fault
  - Two open conductor fault
- Shunt fault or short circuit fault.
  - Symmetrical fault or balanced fault
    - Three phase fault
  - Unsymmetrical fault or unbalanced fault
    - Line to ground (L-G) fault
    - Line to Line (L-L) fault
    - Double line to ground (L-L-G) fault

4. Write the relative frequency of occurrence of various types of faults. (K)

Types of fault	Relative frequency of occurrence of faults
Three phase fault	5%
Double line to ground fault	10%
Line to Line fault	15%
Line to ground fault	70%

5. State and explain symmetrical fault or balanced three phase fault. (K) (May/ June 2016)

This type of fault is defined as the simultaneous short circuit across all the three phases. It occurs infrequently, but it is the most severe type of fault encountered. Because the network is balanced, it is solved by per phase basis using Thevenins theorem or bus impedance matrix or KVL, KCL laws.

6. What is the need for short circuit studies or fault analysis? (U) (Nov/ Dec 2016)

Short circuit studies are essential in order to design or develop the protective schemes for various parts of the system .To estimate the magnitude of fault current for the proper choice of circuit breaker and protective relays.

7. What is bolted fault or solid fault? (K) (May/ June 2016)

A Fault represents a structural network change equivalent with that caused by the addition of impedance at the place of a fault. If the fault impedance is zero, the fault is referred as bolted fault or solid fault.

8. What is the reason for transients during short circuits? (K)

The faults or short circuits are associated with sudden change in currents. Most of the components of the power system have inductive property which opposes any sudden change in currents, so the faults are associated with transients.

9. What is meant by doubling effect? (K)

If a symmetrical fault occurs when the voltage wave is going through zero then the maximum momentary short circuit current will be double the value of maximum symmetrical short circuit current. This effect is called doubling effect.

10. Define DC off set current. (K)

The unidirectional transient component of short circuit current is called DC off set current.

11. What is synchronous reactance or steady state condition reactance? (K) The synchronous reactance is the ratio of induced emf and the steady state rms current. It is the sum of leakage reactance (X_l) and the armature reactance (X_a).

$$X_d = X_a + X_l$$

12. What is sub transient reactance? (K)

The synchronous reactance is the ratio of induced emf on no load and the sub transient symmetrical rms current.

$$X_d'' = X_l + \frac{1}{\frac{1}{X_a} + \frac{1}{X_f} + \frac{1}{X_{dw}}}$$

13. What is transient reactance? (K)

The synchronous reactance is the ratio of induced emf on no load and the transient symmetrical rms current.

$$X_d' = X_l + \frac{1}{\frac{1}{X_a} + \frac{1}{X_f}}$$

14. Define short circuit capacity of power system or fault level. (K)

(Nov/ Dec 2016)

Short circuit capacity (SCC) or Short circuit MVA or fault level at a bus is defined as the product of the magnitude of the prefault bus voltage and the post fault current.

SCC or Short circuit MVA = $|V_{prefault}| \times |I_f|$ or

SCC = $\frac{1}{X_{th}}$ $p.u$ MVA

15. Find the fault current in fig., if the prefault voltage at the fault point is 0.97 p.u.? (E)

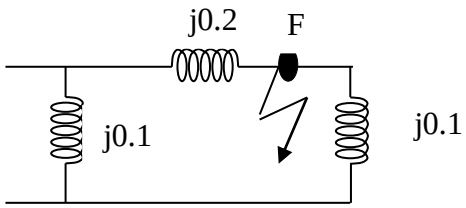

$$Z_{th} = \frac{j0.35 \times j0.15}{j0.35 + j0.15} = j0.105\ p.u$$

$$Fault\ current\ I_f = \frac{V_{th}}{Z_{th}} = \frac{0.97}{j0.105} = -j\ 9.238\ p.u$$

16. What is bus impedance matrix? (K)

Bus impedance matrix is the inverse of the bus admittance matrix.$Z_{bus} = [Y_{bus}]^{-1}$

The matrix consisting of driving point impedance and transfer impedances of the network is called as bus impedance matrix. Bus impedance matrix is symmetrical.

17. Give the methods available for forming bus impedance matrix. (U)

Form bus admittance matrix and take the inverse to get bus impedance matrix.

- Using bus building algorithm.
- Using L-U factorization of Y-bus matrix.

19. Write in brief about Bus building algorithm.(U)

It is an indirect method of taking the inverse of the admittance matrix by considering one bus at a time.

20. What are the advantages of bus building algorithm?(R)

The advantages are:

a. It is suitable for large power systems.
b. Modification is easy

PART (B & C)

1. A 25 MVA, 11 KV generator with Xd''=20% is connected through a transformer to a bus which supplies four identical motors as shown in figure. Each motor has Xd'' =20% and Xd'=25% on a base of 5 MVA, 6.6 KV. The three phase rating of the transformer is 25 MVA, 11/6.6 KV with a leakage reactance of 10%. The bus voltage at the motors is 6.6 KV when a three phase fault occurs at point P. for the faults specified, Calculate (i) the sub transient current in the fault (ii) the sub transient current in breaker A. (iii) momentary current in breaker A. **(AP)**

2. A three phase transmission line operating at 33 KV and having a resistance and reactance of 5 ohms and 15 ohms respectively is connected to the generating station bus-bar through a 5000 KVA step up transformer which has a reactance of 0.05 p.u. Connected to the bus-bars are two alternators, one 10000 KVA having 0.08 p.u. reactance, and another 5000 KVA having 0.06 p.u. reactance. Calculate the KVA at a short-circuit fault between phases occurring (a) at the high voltage terminals of the transformers (b) at load end of transmission line. **(AP)**

3. A synchronous generator and a synchronous motor each rated 25 MVA, 11 KV having 15% sub – transient reactance are connected through transformers and a line as shown in fig. The Transformers are rated 25 MVA, 11/66 KV and 66/11 KV with leakage reactance of 10% each. The line has a reactance of 10% on a base of 25 MVA, 66 KV.The motor is drawing 15 MW at 0.5 power factor leading at a terminal voltage of 10.6 KV. When a symmetrical three phase fault occurs at the motor terminals. Find the sub – transient current in the generator, Motor and Fault. **(E)**

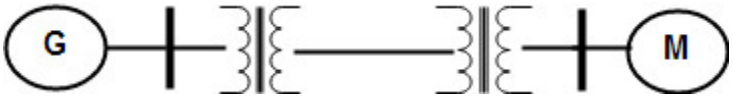

4. A generator is connected through a transformer to a synchronous motor. The subtransient reactance of generator and motor are 0.15 p.u. and 0.35 p.u.respectively. The leakage reactance of the transformer is 0.1p.u. All the reactances are calculated on a common base. A three phase fault occurs at the terminals of the motor when the terminal voltage of generator is 1 p.u. and 0.8 p.f. leading. Find the subtransient current in p.u. in the fault, generator and motor. Use the terminal voltage of generator as a reference vector. **(E)**

5. The currents flowing in the lines towards a balanced load connected in Δ are Ia = 100∟0°, Ib = 141.4 ∟225°, Ic = 100∟∟90°. Find the symmetrical components of the given line currents and draw phasor diagram of the positive and negative sequence line and phase currents. **(E)**

Derive the expression of three phase power in terms of symmetrical components. **(C)**

6. A 3 phase, 5 MVA, 6.6 KV alternator with a reactance of 8 % is connected to a feeder series impedance (0.12+j0.48) ohm/phase/km through a step up transformer. The transformer is rated at 3 MVA, 6.6kV/ 33kV and has a reactance of 5%. Determine the falt current supplied by the generator operating under no load with a voltage of 6.9 kV, when a three phase symmetrical fault occurs at a poing 15 km along the feeder. **(AP)** **(Nov/ Dec 2016)**
7. For the radial network shown in figure a three phase fault occurs at point F. Determine the fault current and the line voltage at 11.8 kV bus under fault condition. **(E)**

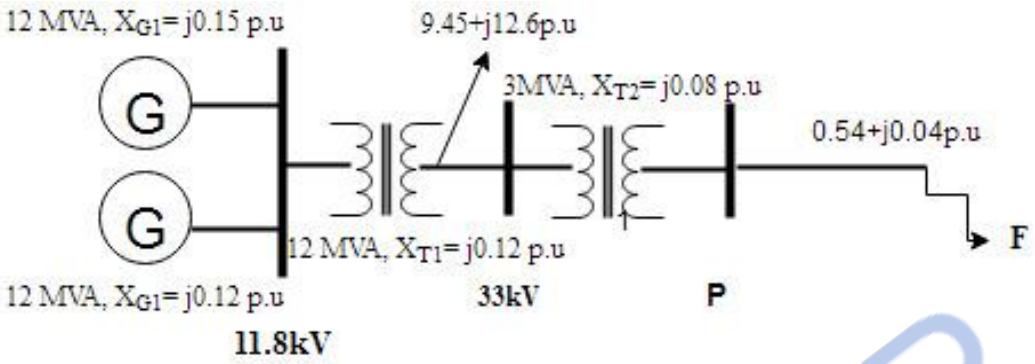

8. A Symmetrical fault occurs at bus 4 for the system shown in Fig. Determine the fault current using Zbus building Algorithm. **(AP)**

(May/ June 2016)

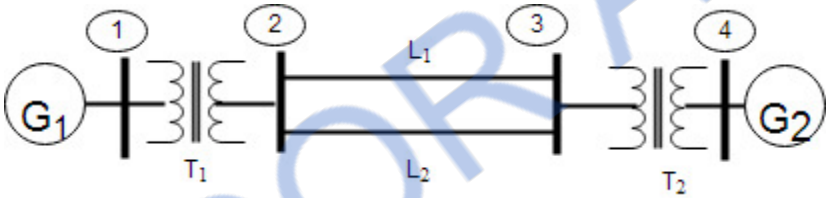

G_1, G_2 : 100 MVA, 20 kV, X+=15%
Transformer : X_{leak} =9%
L_1, L_2 : X^+ =10%

9. A generating station feeding a 132 Kv system is hown in figure. Determine the total fault current, fault level and fault current supplied by each alternator for a three phase fault at the receiving end bus. The line is 200km long. **(AP)**

G1 : 100 MVA, 11kV, X=15%
G2 : 50 MVA, 11 kV, X=10%
T1 : 100 MVA, 11/132 kV, X=10%
T2 : 50 mVA, 11/132 kV, X=8%

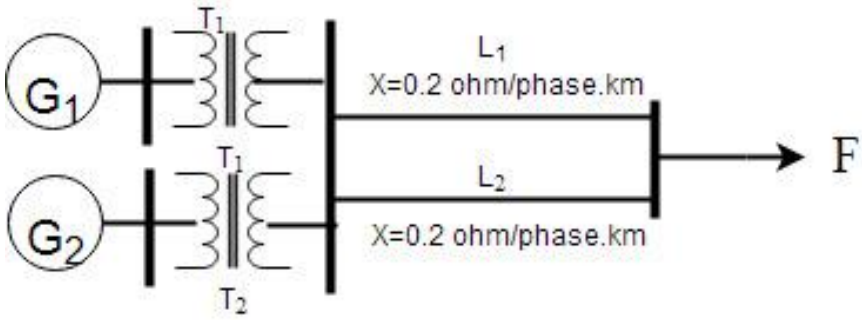

10. Generator G1 and G2 are identical and rated 11 KV. 20 MVA and have a transient reactance of 0.25 p.u at own MVA base. The transformers T1 and T2 are also identical and are rated 11/66 kV, 5 MVA and have a reactance of 0.06 p.u to their own MVA base. A 50 km long transmission line is connected

between the two generators. Calculate three phase fault current, when fault occurs at middle of the line as shown in Fig. **(AP)** **(Nov/ Dec 2015)**

11. A synchronous generator and synchronous motor each rated 30 MVA, 13.2 kV and both have sub transient reactance of 20% and the line reactance of 12% on a base of machine ratings. The motor is drawing 25 Mw at 0.85 p.f leading. The terminal voltage is 12 kV when a three phase short circuit fault occurs at motor terminals. Find the subtransient current in generator, motor and at the fault point. **(E)**

(Nov/ Dec 2015)

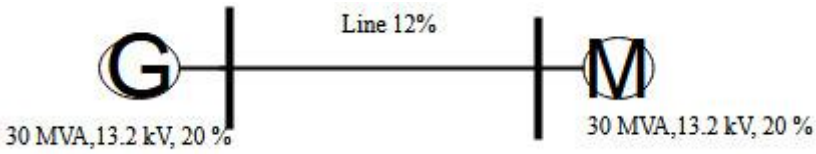

13. Determine the Z bus for the system whose reactance diagram is shown in the Fig. where the impedance is given in p.u.**(A)**

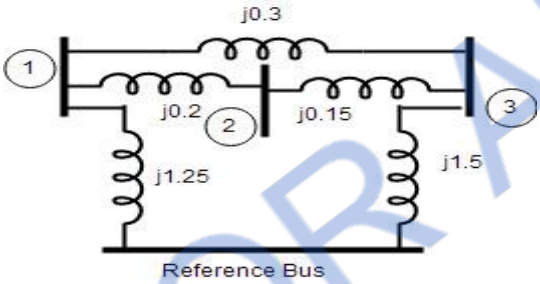

14. Explain the step by step procedure of the formation of ZBUS by bus building algorithm. **(U)**

15. Find the bus impedance matrix for the system whose reactance diagram is shown fig. All the impedance are in p.u. **(A)**

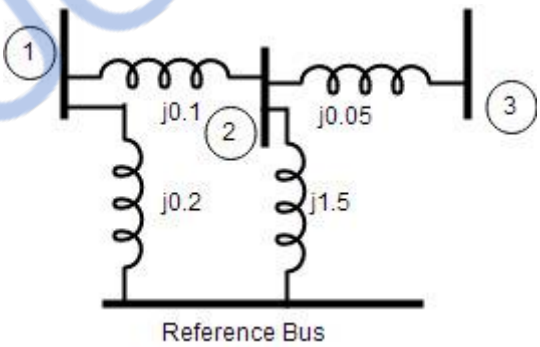

16. Using building algorithm method, determine ZBUS for the network shown in Fig where the impedances are labeled are shown in per unit. **(A)**

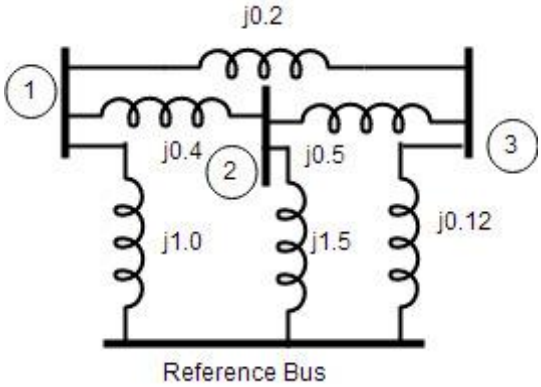

UNIT- IV UNSYMMETRICAL FAULT ANALYSIS

PART A

1. What are the symmetrical components of a 3 phase system? (K)
(Nov/Dec 2015, May/ June 2016)

In a 3 phase system, the unbalanced vectors (either currents or voltage) can be resolved into three balanced system of vectors.

They are:

- Positive sequence components
- Negative sequence components
- Zero sequence components

Unsymmetrical fault analysis can be done by using symmetrical components.

2. What are the positive sequence components? (K)

It consists of three components of equal magnitude, displaced each other by 120˚ in phase and having the phase sequence abc .

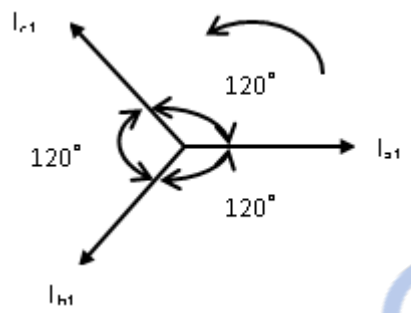

3. What are the negative sequence components? (K)

It consists of three components of equal magnitude, displaced each other by 120˚ in phase and having the phase sequence acb .

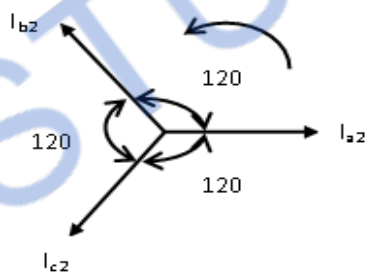

4. What are the zero sequence components? (K)

It consists of three phasors equal in magnitude and with zero phase displacement from each other.

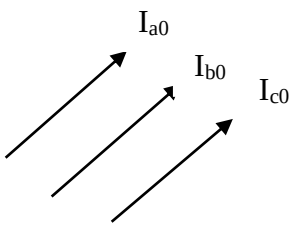

$I_{a0} = I_{b0} = I_{c0}$

5. What is sequence operator? (K) (Nov/Dec 2015)

In unbalanced problem, to find the relationship between phase voltages and phase currents, we use sequence operator **'a'**.

a = 1∠120° = e^{j120}= - 0.5+j0.866

$a^2 = 1\angle 240^\circ = -0.5 - j0.866$

$1 + a + a^2 = 0$

6. Write down the equations to convert symmetrical components into unbalanced phase currents. (Or) Determination of unbalanced currents from symmetrical currents. (K)

Let, I_a, I_b, I_c be the unbalanced phase currents

Let, I_{a0}, I_{a1}, I_{a2} be the symmetrical components of phase a

$$\begin{bmatrix} I_a \\ I_b \\ I_b \end{bmatrix} = \begin{bmatrix} 1 & 1 & 1 \\ 1 & a^2 & a \\ 1 & a & a^2 \end{bmatrix} \begin{bmatrix} I_{a0} \\ I_{a1} \\ I_{a2} \end{bmatrix}$$

7. Write down the equations to convert unbalanced phase currents into symmetrical components. (Or) Determination of symmetrical currents from unbalanced currents. (K) (May/ June 2016)

Let, I_a, I_b, I_c be the unbalanced phase currents

Let, I_{a0}, I_{a1}, I_{a2} be the symmetrical components of phase a

$$\begin{bmatrix} I_{a0} \\ I_{a1} \\ I_{a2} \end{bmatrix} = \frac{1}{3} \begin{bmatrix} 1 & 1 & 1 \\ 1 & a & a^2 \\ 1 & a^2 & a \end{bmatrix} \begin{bmatrix} I_a \\ I_b \\ I_b \end{bmatrix}$$

8. What are sequence impedance and sequence network? (K)

The sequence impedances are the impedances offered by the power system components or elements to +ve, -ve and zero sequence current.

The single phase equivalent circuit of power system consisting of impedances to current of any one sequence only is called sequence network.

9. Write the equation to determine fault current for L-G, L-L and L-L-G fault with impedance. (K)

$$I_f = I_a = 3I_a^+ = \frac{E_a}{Z_{KK}^0 + Z_{KK}^+ + Z_{KK}^- + 3Z_f}$$

10. Write the equation to determine fault current for L-L fault with impedance. (K)

$$I_f = \frac{-j\sqrt{3}E_a}{(Z_{KK}^+ + Z_{KK}^- + Z_f)}$$

11. Write the equation to determine fault current for L-L-G fault with impedance. (K)

$$I_a^+ = \frac{E_a}{Z_{KK}^+ + \frac{Z_{KK}^-(Z_{KK}^0 + 3Z_f)}{Z_{KK}^0 + 3Z_f + Z_{KK}^-}}$$

12. Draw the equivalent sequence network diagram for L-G fault. (K)

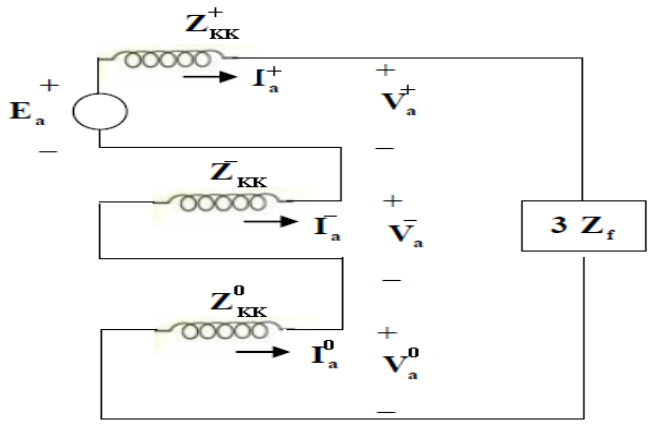

13. Draw the equivalent sequence network diagram for L-L fault. (K)

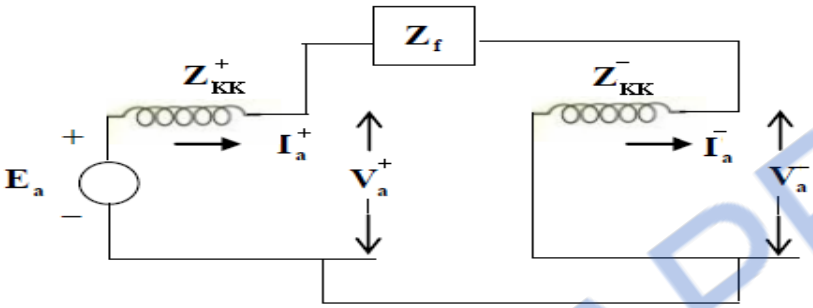

14. Draw the equivalent sequence network diagram for Double Line to Ground Fault. (K)

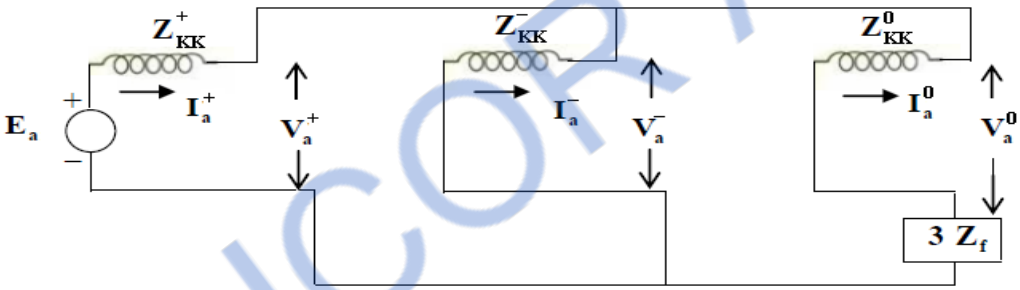

PART (B&C)

1. Explain the sequence impedance of synchronous machine, transmission lines and star connected loads. **(U)**

2. Draw the transformer zero sequence equivalent circuits for the various winding connections. **(K)**

3. A 25MVA, 11KV, three phase generator has a sub transient reactance of 20%. The generator supplies two motors over a transmission line with transformers at both ends as shown in one line diagram. The motors have rated inputs of 15 and 7.5 MVA both 10KV with 25% sub transient reactance. The three phase transformers are rated 30MVA, 10.8/121KV, and connection delta-star with leakage reactance of 10% each. The series reactance of the line is 100 ohms. Draw the positive and negative sequence networks of the system with reactance marked in per unit. **(AP)**

4. Develop the sequence network for a double line to ground (LLG) fault. **(C)**

5. A salient pole generator without dampers is rated 20 MVA, 13.6 KV and has direct axis sub – transient reactance of 0.2 per unit. The negative and zero sequence reactance are 0.35 and 0.1 per unit respectively. The neutral of the generator is solidly grounded. With the generator operating unloaded at rated voltage with Ean = 1.0 ∟0° per unit, a single line to ground fault occurs at the machine terminals, which then have per – unit voltage to ground.

Va = 0; Vb = 1.013∟-102.25°; Vc = 1.013∟102.25°

Determine the sub transient current in the generator and the line to line voltage for sub transient conditions due to the fault. **(AP)**

6. Derive the expression for fault current in single line to ground fault on unloaded generator. Draw an equivalent network showing the inter connection of networks to simulate single line to ground fault. **(C)**

7. Derive the expression for fault current in double line to ground fault on unloaded generator. Draw an equivalent network showing the inter connection of networks to simulate double line to ground fault.

OR

Deduce and draw the sequence network for LLG fault at the terminal of the unloaded generator. **(C)** **(May/ June 2016)**

8. Derive the expression for fault current in line to line fault on unloaded generator. Draw an equivalent network showing the inter connection of networks to simulate double line to line fault. **(C)**

(May/ June 2016, Nov/ Dec 2016)

9. An unloaded star connected solidly grounded 10 MVA, 11 KV, generator has Positive, Negative and zero sequence impedances as j 1.3 ohms, J 0.8 ohms and j 0.4 ohms respectively. Single line to ground fault occurs at terminals of the generator.

i. Calculate the fault current.

ii. Determine the value of the inductive reactance that must be inserted at the generator neutral to limit the fault current to 50% of the value obtained in Determine the fault current and MVA at faulted bus for a line to ground (solid) fault at bus 4 as shown in figure.

G1, G2 : 100 MVA, 11 KV, X+ = X - 15%, Xn = 6%

T1, T2 : 100 MVA, 11 KV/220 KV, Xleak = 9%

L1, L2 : X+ = X - = 10% on a base of 100 MVA. Consider Fault at phase 'a'. **(AP)**

10. A 30 MVA, 11 Kv generator has Z1= Z2= j0.05. A line to Ground fault occurs at generator terminals. Find the fault current and line voltages during fault conditions. Assume that the generator neutral is solidly grounded and the generator is operating at no load and at rated voltage during occurrence of fault. **(AP)** **(Nov/ Dec 2016)**

11. What are the assumptions in short circuit studies? **(K)**

(May/ June 2016)

12. Derive the expression for the three phase power in terms of symmetrical components. **(C)**

(Nov/ Dec 2015)

13. A 30 MVA, 11 kV, 3Φ synchronous generator has a direct subtransient reactance of 0.25 p.u. The negatice and zero sequence rcactances are 0.35 and 0.1 p.u respectively. The neutral of the generator is solidly grounded. Determine the subtransient current in the generator and the line to line voltages for sub transient conditions when a single line to ground fault occurs at the generator terminals with the generator operating unloaded at rated voltage. **(AP)**

(Nov/ Dec 2015)

UNIT- V STABILITY ANALYSIS

PART A

1. What is power system stability? (K)

The stability of an interconnected power system means is the ability of the power system is to return or regain to normal or stable operating condition after having been subjected to some form of disturbance.

2. How power system stability is classified? (A) (Nov/Dec 2015)

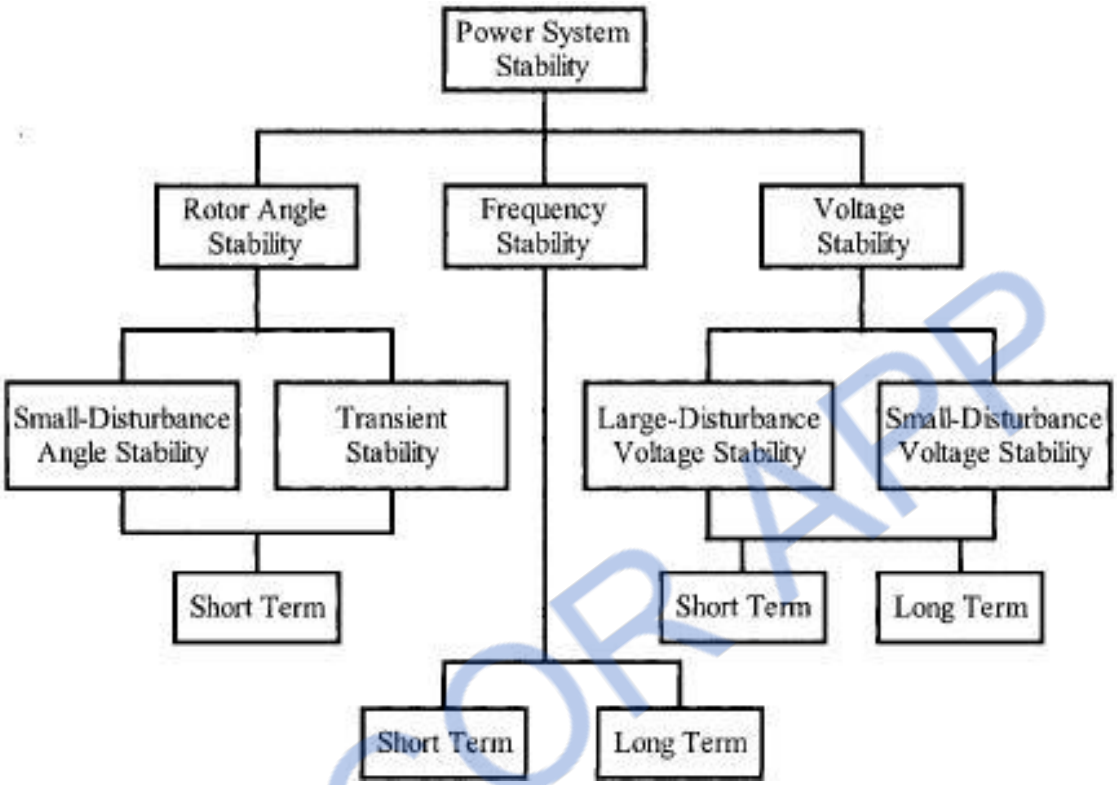

3. What is rotor angle stability? (K)

Rotor angle stability is the ability of interconnected synchronous machines of a power system to remain in synchronism.

4. What is steady state stability? (K) (Nov/ Dec 2012)

Steady state stability is defined as the ability of the power system to bring it to a stable condition or remain in synchronism after a small disturbance.

5. What is steady state stability limit? (K)

The steady sate stability limit is the maximum power that can be transferred by a machine to receiving system without loss of synchronism

6. What is transient stability? (K) (Nov/ Dec 2009, Nov/ Dec 2012, May/ June 2016)

Transient stability is defined as the ability of the power system to bring it to a stable condition or remain in synchronism after a large disturbance.

7. What is transient stability limit? (K)

The transient stability limit is the maximum power that can be transferred by a machine to a fault or a receiving system during a transient state without loss of synchronism.

Transient stability limit is always less than steady state stability limit.

8. What is dynamic stability? (K)

It is the ability of a power system to remain in synchronism after the initial swing (transient stability period) until the system has settled down to the new steady state equilibrium condition

9. What is voltage stability? (K) (Nov/ Dec 2016)

It is the ability of a power system to maintain steady acceptable voltages at all buses in the system under normal operating conditions and after being subjected to a disturbance.

10. State the causes of voltage instability. (K)

A system enters a state of voltage instability when a disturbance, increase in load demand,or change in system condition causes a progressive and uncontrollable drop in voltage

The main factor causing instability is the inability of the power system to meet the demand for reactive power.

11. **Write the power angle equation and draw the power angle curve. (K) (Nov/Dec 2015)**

$$P = \frac{V_s V_r}{X_T} \sin \delta$$

Where, P – Real Power in watts

V_s – Sending end voltage

V_r- Receiving end voltage

X_T - Total reactance between sending end receiving end

δ - Rotor angle.

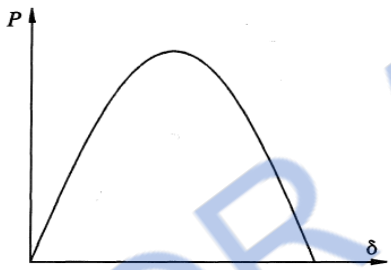

12. Write the expression for maximum power transfer. (K)

$$P_{max} = \frac{V_s V_r}{X_T}$$

13. Write the swing equation for a SMIB (Single machine connected to an infinite bus bar) system. (K)

$$\frac{H}{\pi f}\frac{d^2\delta}{dt^2} = P_m - P_e$$

Since M in p.u = $H/\pi f$

$$M\frac{d^2\delta}{dt^2} = P_m - P_e$$

Where H = inertia constant in MW/MVA

f = frequency in Hz

M = inertia constant in p.u

14. **Define swing curve. (K)**

The swing curve is the plot or graph between the power angle δ and time t. From the nature of variations of δ the stability of a system for any disturbance can be determined.

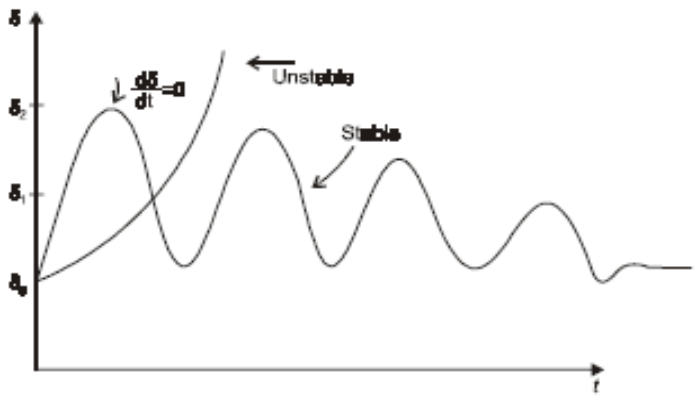

15. In a 3 machine system having ratings G_1, G_2 and G_3 and inertia constants M_1, M_2 and M_3.What is the inertia constants M and H of the equivalent system. (K)

$$M_{eq} = \frac{M_1G_1}{G_b} + \frac{M_2G_2}{G_b} + \frac{M_3G_3}{G_b}$$

$$H_{eq} = \frac{\pi f M_{eq}}{G_b}$$

Where G_1, G_2, G_3 – MVA rating of machines 1, 2, and

G_b = Base MVA or system MVA

16. State the assumptions made in stability studies. (K)

- Machines represents by classical model
- The losses in the system are neglected (all resistance are neglected)
- The voltage behind transient reactance is assumed to remain constant.
- Controllers are not considered (Shunt and series capacitor)
- Effect of damper winding is neglected.

17. **State Equal Area Criterion. (K)** **(May/ June 2016)**

The equal area criterion for stability states that the system is stable if the area under P – δ curve reduces to zero at some value of δ. This is possible if the positive (accelerating) area under P – δ curve is equal to the negative (decelerating) area under P – δ curve for a finite change in δ. hence stability criterion is called equal area criterion.

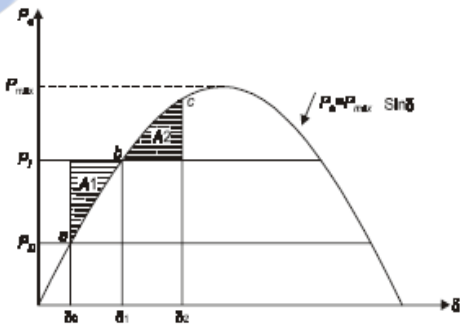

18. Define critical clearing angle. (K)

The critical clearing angleδ_{cc}, is the maximum allowable change in the power angle δ before clearing the fault, without loss of synchronism.

The time corresponding to this angle is called critical clearing time,t_{cc}.It can be defined as the maximum time delay that can be allowed to clear a fault without loss of synchronism.

19. Define critical clearing time. (K)

The corresponding critical time for removing the fault is called critical clearing time

20. List the methods of improving the transient stability limit of a power system. (K) (Nov/ Dec 2016)

- Reduction in system transfer reactance
- Increase of system voltage and use AVR
- Use of high speed excitation systems
- Use of high speed reclosing breakers

21. **What are the numerical integration methods of power system stability? (K)**

- Point by point method or step by step method
- Euler method
- Modified Euler method
- Runge-Kutta method(R-K method)

22. **State the application of equal area criterion. (K)**

We apply the equal area criterion to two different systems of operation

- Sustained line fault
- line fault cleared after sometime by the simultaneous tripping of the breakers at both the end

PART (B &C)

1. Derive swing equation and discuss the importance of stability studies in power system planning and operation. **(C) (Nov/ Dec 2015, Nov/ Dec 2016)**

2. Describe the equal area criterion for transient stability analysis of a system. **(K)**

3. Write the computation algorithm for obtaining swing curves using modified Euler's method. **(K) (May/ June 2016)**

4. A 60 Hz synchronous generator having inertia constant 5 MJ/MVA and X^1d =0.3p.u is connected to a infinite bus through circuit shown. Reactance marked on common base value real power Pe is 0.8 p.u reactive power is 0.074 p.u and bus voltage is V=1p.u. three phase fault occur at mid of line. When fault is cleared calculate clearing angle and clearing time and current of system stability. **(AP)**

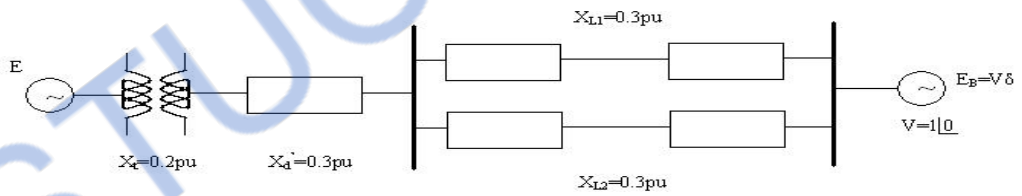

5. Derive Expression for critical clearing angle. **(C)**

6. A 150 MVA generator – transformer unit having an overall reactance of 0.3 p.u. is delivering 150 MW to infinite bus bar over a double circuit 220 KV line having reactance per phase per circuit of 100 ohms. A 3 - phase fault occurs midway along one of the transmission lines. Calculate the maximum angle of swing that the generator may achieve before the fault is cleared without loss of stability. **(AP)**

7. A 50 Hz, 500 MVA, 400 KV generators (with transformer) is connected to a 400 KV infinite bus bar through an interconnector. The generator has H = 2.5 MJ/MVA, Voltage behind transient reactance of 450 KV and is loaded 460 MW. The transfer reactance between generator and bus bar under various conditions are:

Prefault 0.5 Pu
During Fault 1.0 Pu
Post fault 0.75 Pu

Calculate the swing curve using intervals of 0.05 sec and assuming that the fault is cleared at 0.15 sec. **(AP)**

8. Find the critical clearing angle and time for clearing the fault with simultaneous opening of the breakers when a three phase fault occurs at point P close to bus 1 as shown in Fig. The generator is delivering 1.0 p.u power at the instant proceding the fault. **(E)** **(Nov/ Dec 2016)**

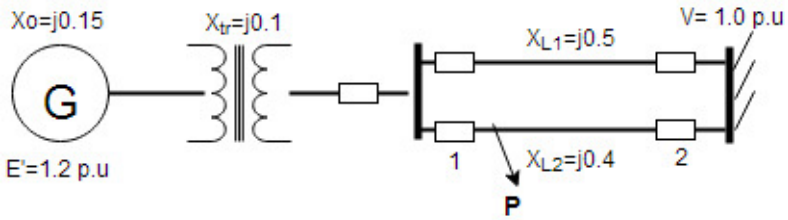

9. A generator is operating at 50 Hz delivers 1.0 p.u power to an infinite bus through a transmission circuit in which resistance is ignored. A fault takes place reducing the maximum power transferable to 0.5 p.u. Before the fault, this power was 2.0 p.u and after the clearance of the fault it is 1.5 p.u. By the use of equal area criterion determine the critical clearing angle. **(AP)**
(April/ May 2016)

10. Discuss the method by which transient stability can be improved. **(U)** **(April/ May 2016)**

11. A Synchronous motor is receiving 30% of the power that is capable of receiving from an infinite bus. If the load on the motor is doubled calculate the maximum value of δ during the swinging of the motor around its new equilibrium position. **(AP)** **(Nov/ Dec 2015)**

12. The moment of inertia of a 4 pole, 100 mVA, 11 kV, 3 Φ, 0.8 power factor, 50 Hz turbo alternator is 10000kg-m^2. Calculate H and M. **(AP)**

(May/ June 2015)

Reg. No: | | | | | | | | | | | | |

PANIMALAR ENGINEERING COLLEGE
An Autonomous Institution, Affiliated to Anna University, Chennai
CHENNAI -600 123

B.E./ B.Tech. DEGREE END SEMESTER

EXAMINATIONSNOVEMBER/DECEMBER 2021

Fifth Semester

Electrical and Electronics Engineering

EE8501 – POWER SYSTE ANALYSIS

(Regulation 2017)

Time : Three hours **Maximum : 100 Marks**

Answer ALL Questions

PART A (10×2=20 Marks)

1. What are the components of power system?
2. Write the equation for per unit impedance.
3. What is the need for load flow study?
4. Why is it necessary to use acceleration factor in Gauss Seidal method of load flow studies?
5. What is the need for short circuit studies?
6. Name the faults in which all the three sequence component currents are equal and in whichpositive and negative sequence currents together is equal to zero sequence currents.
7. What is the significance of 'a' operator?
8. Write the symmetrical components of three phase system.
9. What is an infinite bus?
10. Write the swing equation and explain the terms involved in it.

PART – B (5x13 = 65 Marks)

11. a. Examine the reactance diagram for the Power system shown in fig. Neglect resistance and use a base of 100MVA, 220kV in j50 ohms line. The ratings of the generator motor and transformer are given below. **(13)**

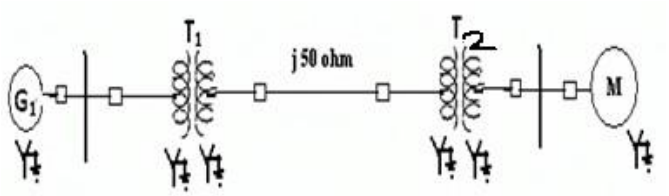

Generator: 40MVA, 25KV, X'' =20%.
Synchronous Motor: 50MVA, 11KV, X'' =30%
T1: Y-Y transformer : 40MVA , 33/220KV,
X=15%T2:Y- Y transformer : 30 MVA
11/220KV, X=15%

(OR) **(13)**

b. A 300 MVA , 20KV, 3Φ generator has a reactance of 25%.The generator supplies two motors through transformer and transmission line as shown in fig. The transformer T1 isa 3Φ transformer, 350 MVA, 20/230 KV, 10% reactance.
The transformer T2 is composed of 3 single phase units eachrated, 100 MVA, 127/13.2 KV, with 10% reactance. The connection of T1 and T2 are shown fig.The motors are rated at 200 MVA and 100 MVA both 13.2KV and 20% reactance.
Taking the generator rating as base.Draw reactance diagram. Reactance of the line is j0.5Ω with 64km lomg.

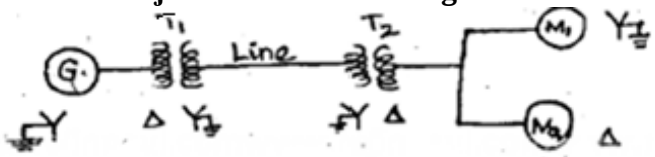

12 a. The load flow data for a 4 bus system shown in figure is given in table with bus 1 as slack. Determine voltages at the end of I iteration using Gauss Seidal method with α=1.6. **(13)**

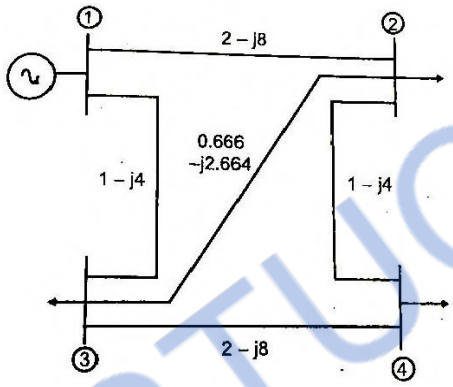

Bus	P in p.u	Q in p.u	V in p.u	Remarks
1	-	-	$1.06\angle 0^0$	Slack bus
2	0.5	0.2	1pu	PQ bus
3	0.4	0.3	1pu	PQ bus
4	0.3	0.1	1pu	PQ bus

(OR)

b. Derive N-R method of load flow algorithm and explain the implementation of this algorithm with the flowchart. **(13)**

13 a. Determine Z_{bus} for a 3 bus system as shown in figure where impedances are shown and values are in p.u. **(13)**

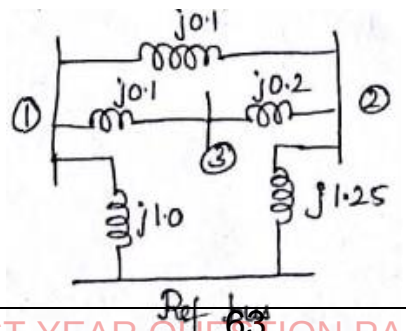

(OR)

b. A symmetrical fault occurs on bus 4 of system shown in figure, Compute the faultcurrent, post fault voltages and line current. **(13)**

Generator G1 ,G2 :100MVA,20KV,X_1=15%. ;

Transformer T1, T2:, X_{leak}=9%,

Transmission line L1,L2:

X_1=10%

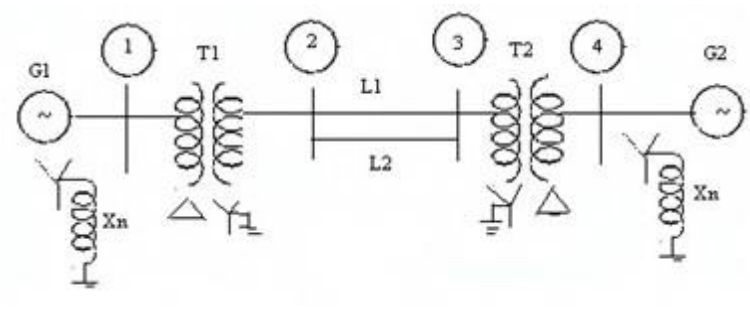

(13)

14 a. A salient pole generator without dampers is rated 25 MVA, 13.2 KV and has direct axis sub – transient reactance of 0.2 per unit. The negative and zero sequence reactances are 0.35 and 0.1 per unitrespectively. The neutral of the generator is solidly grounded.Determine the sub transient current in the generator and the line to line voltage for sub transient conditions when a single line to ground fault occurs at terminals of an unloaded generator. **(13)**

(OR)

b. Derive the expression for fault current in line to line fault on unloaded generator. Draw an equivalent network showing the inter connection of networks to simulate line to linefault

15. a. Derive the expression for Swing Equation. **(13)**

(OR)

b. Derivethe critical clearing angle and critical clearing time for transient stability. **(13)**

PART – C (1x15 = 15 Marks)

16 a. Derive the expression for fault current in double line to ground fault on unloaded generator. Draw an equivalent network showing the inter connection of networks to simulate double line to ground fault. **(15)**

b. The one line diagram of a 3Ø power system is shown in figure. Select a commonbase of 100MVA and 20kV on the geenerator side. Draw an impedance diagram. **(15)**

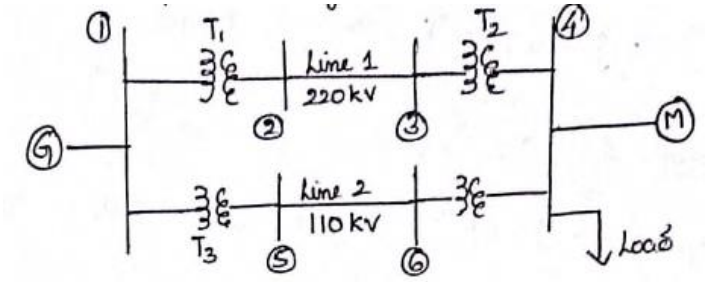

G_1: 85 MVA; 20kV; X'' = 16%
T_1: 60 MVA; 20/220 kV; X'' = 10%T_2: 50 MVA; 220/11 kV; X'' = 5% T_3: 50 MVA; 20/110 kV; X'' = 7% T_4: 40 MVA; 110/11 kV; X'' = 9% M: 65 MVA; 10.5 kV; X'' = 17.7%
The 3Ø load at bus 4 absorbs 62 MVA, 0.8 pf lagging at 10.5 kV, line 1 andline 2 reactance of 45Ω and 60Ω respectively.

****

Reg. No. : | | | | | | | | | | | | |

Question Paper Code : 90204

B.E./B.Tech. DEGREE EXAMINATIONS, NOVEMBER/DECEMBER 2019

Fifth Semester

Electrical and Electronics Engineering

EE 8501 – POWER SYSTEM ANALYSIS

(Regulations 2017)

Time : Three Hours | Maximum : 100 Marks

Answer ALL questions

PART – A **(10×2=20 Marks)**

1. What are the needs for power system planning ?
2. Define bus incidence matrix.
3. What is slack bus ?
4. What are the advantages of N-R method ?
5. What do you mean by symmetrical faults ?
6. What is the need for short circuit analysis ?
7. Define positive sequence impedance.
8. Name the various unsymmetrical faults in a power system.
9. Define steady state stability.
10. State equal area criterion.

PART – B **(5×13=65 Marks)**

11. a) Calculate the per unit quantities of the given one-line diagram. T_2 is composed of three single phase units each rated at 30 MVA, 66/10 kV with 5% reactance. Take generator rating as base.

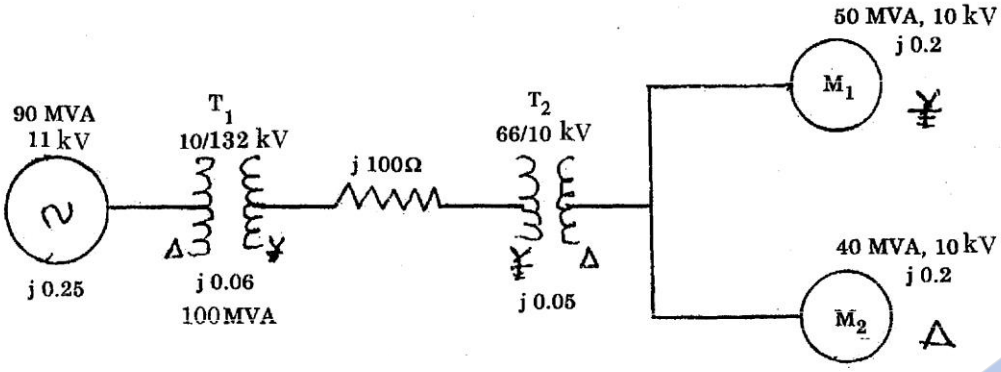

Figure 11(a)

(OR)

b) Determine the bus admittance matrix for the given power system.

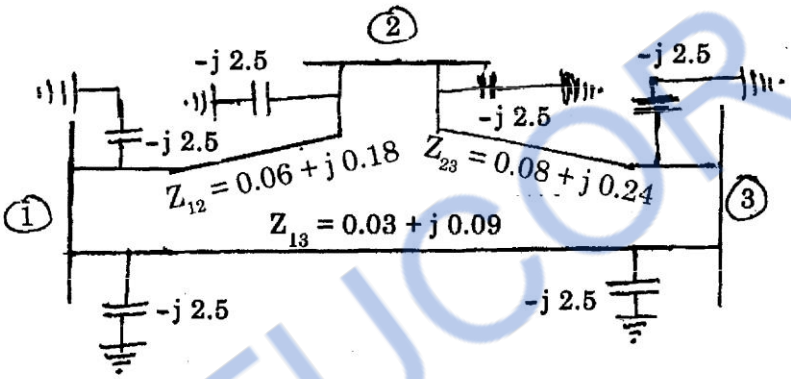

Figure 11(b)

12. a) Derive load flow algorithm using Gauss – Seidel method with flow chart and discuss the advantages of the method.

(OR)

b) The one-line diagram of a simple three bus power system with generators at bus 1 and 2. The magnitude of voltage at bus 1 and 2 are adjusted to 1.06 and 1.05 p.u. The scheduled load at bus 2 is marked. Line impedances are marked to per unit on a 100 MVA base and the line charging is neglected. Solve by N-R method.

Bus Number	Type	Generator (p.u.)		Load (p.u.)		Voltage (p.u.)	Angle (deg)	Reactive Power Limit	
		P_g	Q_g	P_d	Q_d			Q_{min}	Q_{max}
1	Slack	0	0	0	0	1.06	0	–	–
2	PQ	0	0	6	2.5	0	0	–	–
3	PV	2	0	0	0	1.05	0	0.1	2.5

Element	Bus Code	Self-impedance (Ω)
1	1-2	0.01 + j0.05
2	1-3	0.07 + j0.2
3	2-3	0.02 + j0.15

13. a) Describe the construction of Bus impedance matrix (Z_{Bus}) using building algorithm for lines without mutual coupling.

(OR)

b) A four bus sample power system is shown in Figure 13(b). Perform the short circuit analysis for a three phase fault on bus 4 are given below.

G_1 : 11.2 kV, 100 MVA, X = 0.08 p.u.
G_2 : 11.2 kV, 100 MVA, X = 0.08 p.u.
T_1 : 11/110 kV, 100 MVA, X = 0.06 p.u.
T_2 : 11/110 kV, 100 MVA, X = 0.06 p.u.

Assume pre fault voltages 1.0 p.u. and pre fault currents to be zero.

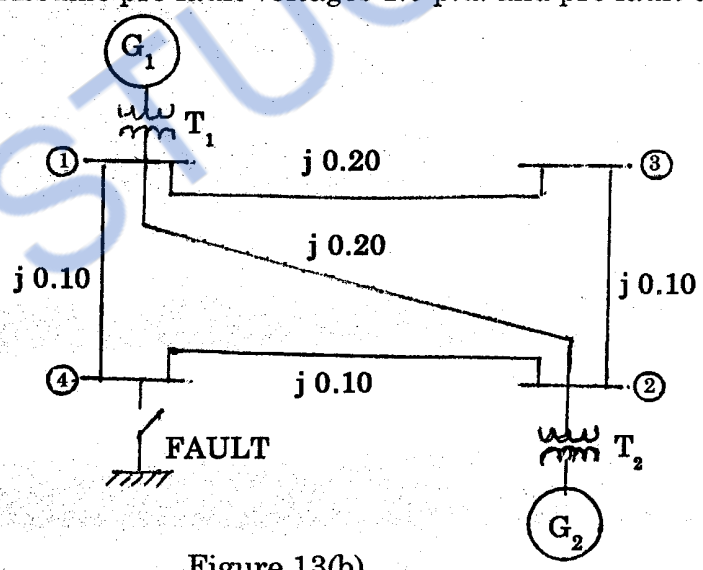

Figure 13(b)

14. a) Derive the expression for fault current in line-to-line fault on an unloaded generator in terms of symmetrical components.

(OR)

b) A 50 MVA, 11 kV synchronous generator has a sub-transient reactance of 20%. The generator supplies two motors over a transmission line with transformers at both ends as shown in Figure 14(b). The motors have rated inputs of 30 and 15 MVA, both 10 kV, with 25% sub-transient reactance. The three phase transformers are both rated 60 MVA, 10.8/121 kV, with leakage reactance of 10% each. Current limiting reactors of 2.5 ohms each connected in the neutral of the generator and the motor number 2. The zero sequence reactance of the transmission line is 300 ohms. The series reactance of the line is 100 ohms. Draw the positive, negative and zero sequence networks.

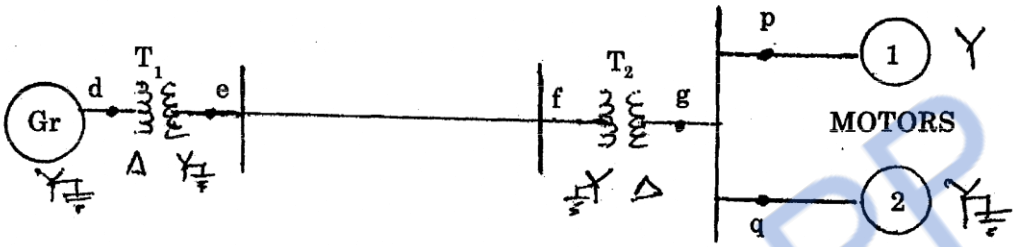

Figure 14(b)

15. a) Derive swing equation used for stability studies in power system.

(OR)

b) A single line diagram of a system is shown in Figure 15(b). All the values are in per unit on a common base. The power delivered into bus 2 is 1.0 p.u. at 0.80 power factor lagging. Obtain the power angle equation and the swing equation for the system. Neglect all losses.

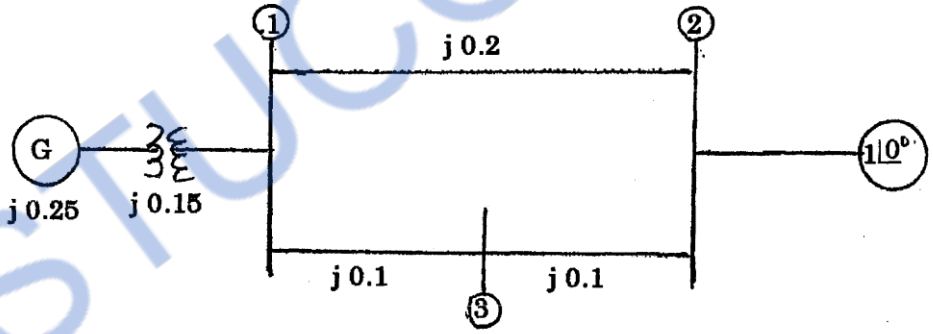

Figure 15(b)

PART – C (1×15=15 Marks)

16. a) Two alternators are operating in parallel and supplying a synchronous motor which is receiving 60 MW power at 0.8 power factor lagging at 6.0 kV. Single line diagram for this system is given in Figure 16(a). Data are given below. Compute the fault current when a single line to ground fault occurs at the middle of the line through a fault resistance of 4.033 ohm.

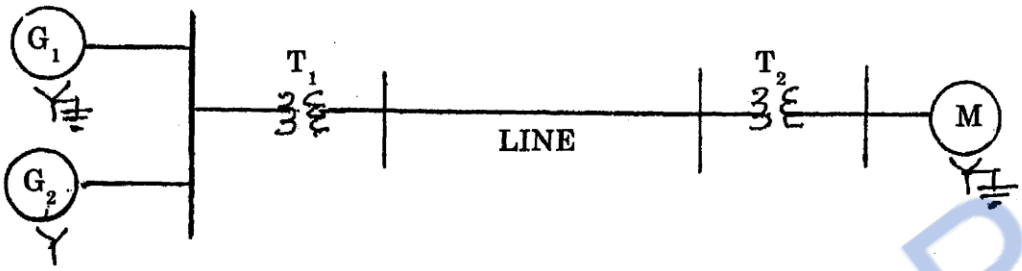

Figure 16(a)

(OR)

b) Find the critical clearing angle for the system shown in Figure 16(b) for a 3Φ fault at the point P. The generator is delivering 1 p.u. power under balanced conditions.

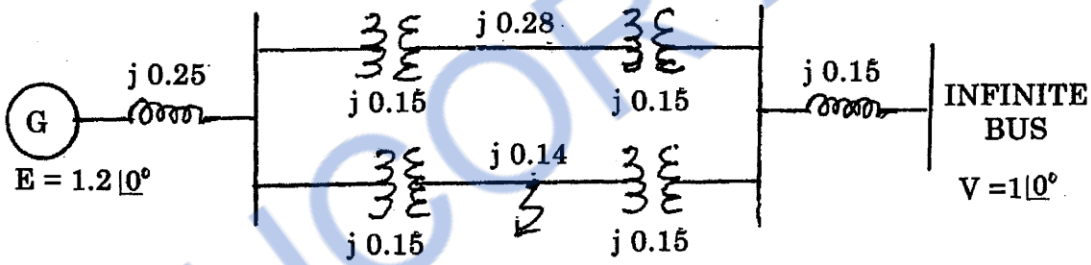

Figure 16(b)

Reg. No. : | | | | | | | | | | | | |

Question Paper Code : 20458

B.E./B.Tech. DEGREE EXAMINATION, NOVEMBER/DECEMBER 2018.

Fifth Semester

Electrical and Electronics Engineering

EE 6501 — POWER SYSTEM ANALYSIS

(Regulations 2013)

(Also Common to PTEE 6501 — Power System Analysis — For B.E. (Part – Time) — Fifth Semester — Electrical and Electronics Engineering – Regulations – 2014)

Time : Three hours Maximum : 100 marks

Answer ALL questions.

PART A — (10 × 2 = 20 marks)

1. What is the need for base values?

2. What are the approximations made in impedance diagram?

3. What is the need for slack bus?

4. When the generator bus is treated as load bus in NR load flow study? What will be the reactive power and bus voltage when the generator bus is treated as load bus?

5. What is the need for short circuit studies or fault analysis?

6. What is the significance of subtransient reactance and transient reactance in short circuit studies?

7. Define negative sequence and zero sequence components.

8. Define the operator 'a' and express the value of 'a' and 'a^2' in both polar and rectangular form.

9. What are coherent machines?

10. How to improve the transient stability limit of the power system.

PART B — (5 × 13 = 65 marks)

11. (a) 300 MVA, 20 kV three-phase generator has a subtransient reactance of 20%. The generator supplies a number of synchronous motors over 64-km transmission line having transformers at both ends, as shown in Figure.1 All motors are rated as 13.2 kV and represented by just two equivalent motors. Rated inputs to the motors are 200 MVA and 100 MVA for M1 and M2, respectively. For both motors X" = 20%. The three phase transformer T1 is rated 350 MVA, 230/20 kV with leakage reactance of 10%. Transformer T2 is composed of three single-phase transformers each rated 127/13.2 kV, 100 MVA with leakage reactance of 10%. Series reactance of the transmission line is 0.5 Ω/km. Draw the impedance diagram, with all impedances marked in per-unit. Select the generator rating as base in the generator circuit. (13)

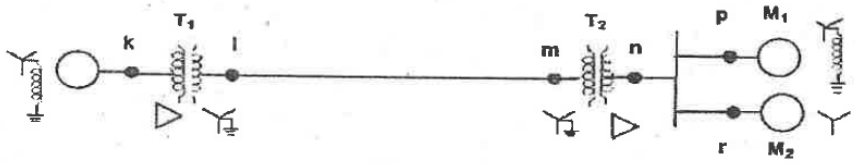

Figure. 1

Or

(b) Draw the impedance diagram of the power system shown in below Figure. 2.

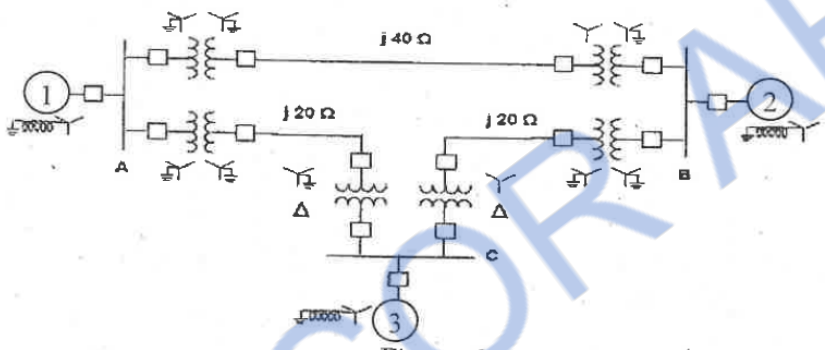

Figure. 2

Mark impedances in per unit. Neglect resistance and use a base of 50 MVA, 138 kV in the 40 – Ω line. The ratings of the generator, motors and transformers are:

Generator 1: 20 MVA, 18 kV, X" = 20%

Generator 2: 20 MVA, 18 kV, X" = 20%

Synchronous motor 3:30 MVA, 13.8 kV, X" = 20%

Three phase Y-Y transformers: 20 MVA, 138Y/20Y kV, X = 10%

Three phase Y- Δ transformers: 15 MVA, 138Y/13.8 Δ kV, X = 10%. (13)

12. (a) With a neat flow chart explain the computational procedure for load flow solution using Gauss-Seidal method when the system contains all types of busses.

Or

(b) (i) Develope a power flow equation at any bus in a power system. (6)

(ii) Evaluate the Jacobian elements for NR load flow. (7)

13. (a) Construct Z Bus for the given network shown in Figure. 3 (13)

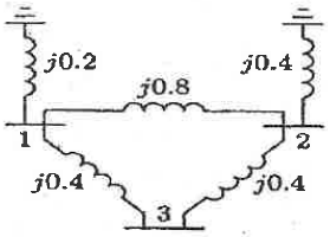

Figure. 3

Or

(b) A 25 MVA, 11 kV generator with Xd" = 20% is connected through a transformer, line and a transformer to a bus that supplies three identical motors as shown in Figure. 4. Each motor has Xd" = 25% and Xd' = 30% on a base of 5 MVA, 6.6 kV. The three-phase rating of the step-up transformer is 25 MVA, 11/66 kV with a leakage reactance of 10% and that of the step-down transformer is 25 MVA, 66/6.6 kV with a leakage reactance of 10%. The bus voltage at the motors is 6.6 kV when a three-phase fault occurs at the point F.

Figure. 4

For the specified fault, calculate

(i) the subtransient current in the fault,

(ii) the subtransient current in the breaker

(iii) the momentary current in breaker B, and

(iv) the current to be interrupted by breaker B in five cycle (13)

14. (a) Derive an expression for fault current as line–to–line fault on an unloaded generator. (13)

Or

(b) A single line to ground fault (on phase a) occurs on the bus I of the system of Figure shown Figure. 5

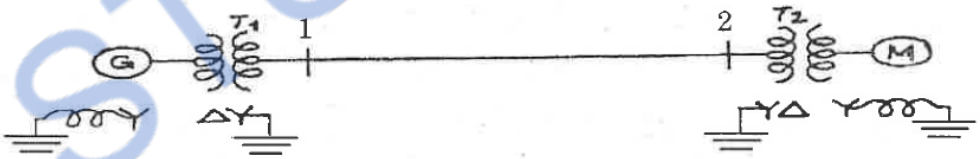

Figure. 5

Using bus impedence (Z_{BUS}) method Find

(i) Current in the fault.

(ii) SC current on the transmission line in all the three phases.

(iii) SC current in phase 'a' of the generator.

(iv) Voltage of the healthy phases of the bus1. (13)

Given: Rating of each machine 1200 kvA, 600 v with $X' = X_2 = 10\%$ $X_0 = 5\%$. Each three-phase transformer is rated 1200 kvA, 600/3300v (Delta/Star) with leakage reactance of 5%. The reactances of the transmission line are $X_1 = X_2 = 20\%$ and $X_0 = 40\%$ on a base of 1200 kVA, 3300 V. The reactances of the neutral grounding reactors are 5% on the kVA and voltage base of the machine. (13)

15. (a) Write the swing equation describing the rotor dynamics of a synchronous machine connected to infinite bus through a double circuit transmission line. (13)

Or

(b) The per unit system reactances that are converted in a common base, are shown in this Figure. 6. Let us assume that the infinite bus voltage is $1\angle 0°$. The generator is delivering 1.0 per unit real power at a lagging power factor of 0.9839 to the infinite bus. While the generator is operating in steady state, a three-phase bolted short circuit occurs in the transmission line connecting buses 2 and 4 — very near to bus 4. The fault is cleared by opening the circuit breakers at the two ends of this line, find the critical clearing time for various values of H. (13)

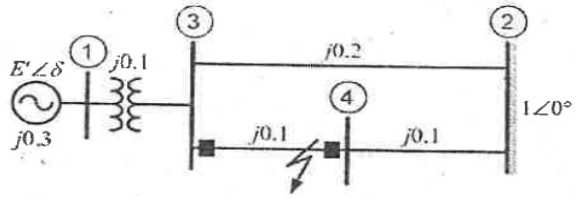

Figure. 6

PART C — (1 × 15 = 15 marks)

16. (a) Figure. 7 shows a part of a power system, where the rest of the system at two points of coupling have been represented by their Thevenin's equivalent circuit (or by a voltage source of 1 pu together its fault level which corresponds to the per unit value of the effective Thevenin's impedance). (15)

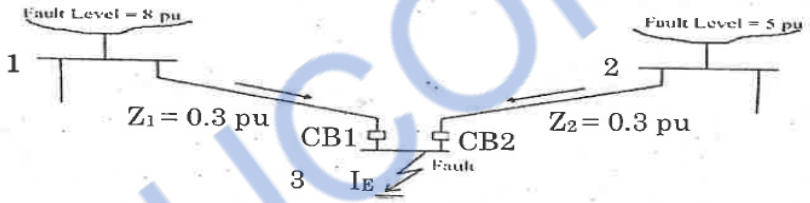

Figure. 7

With CB1 and CB2 open, short circuit capacities are
SCC at bus 1 = 8 pu. gives Zg1 = 1/8 = 0.125 pu
SCC at bus 2 = 5 pu. gives Zg2 = 1/5 = 0.20 pu
Each of the lines are given to have a per unit impedance of 0.3 pu.
$Z_1 = Z_2 = 0.3$ p.u.
Determine the fault current at bus 3.

Or

(b) Discuss in detail the importance of Power system stability study. Also discuss the solution of swing equation by Euler method and RK method.

Reg. No. : | | | | | | | | | | | | |

Question Paper Code : 41003

B.E./B.Tech. DEGREE EXAMINATION, APRIL/MAY 2018

Fifth Semester

Electrical and Electronics Engineering

EE 6501 – POWER SYSTEM ANALYSIS

(Regulations 2013)

Time : Three Hours | Maximum : 100 Marks

Answer ALL questions

PART – A **(10×2=20 Marks)**

1. Mention the requirements of planning the operation of a power system.
2. What is the need for base values ?
3. What is the need for slack bus in power flow analysis ?
4. Discuss the effect of acceleration factor in the load flow solution algorithm.
5. What is meant by fault calculations ?
6. What are all the assumption to be made to simplify the short circuit study ?
7. What is meant by symmetrical fault ?
8. Explain the concept of sequence impedances and sequence networks.
9. Define stability.
10. What is the significance of sub-transient reactance and transient reactance in short circuit studies ?

PART – B **(5×13=65 Marks)**

11. a) i) In the single line diagram shown in figure 1, each three phase generator G is rated at 200 MVA, 13.8 kV and has reactances of 0.85 pu and are generating 1.15 pu. Transformer T_1 is rated at 500 MVA, 13.5 kV/220 kV and has a reactance of 8%. The transmission line has a reactance of 7.8 Ω.

Transformer T_2 has a rating of 400 MVA, 220 kV/33 kV and a reactance of 11%. The load is 250 MVA at a power factor of 0.85 lag. Convert all quantities to a common base of 500 MVA and 220 kV on the line and draw the circuit diagram with values expressed in pu. **(10)**

Figure 1

ii) A 200 MVA, 13.8 kV generator has a reactance of 0.85 p.u. and is generating 1.15 pu voltage. Determine the actual values of the line voltage, phase voltage and reactance. **(3)**

(OR)

b) Determine Z-bus for system whose reactance diagram is shown in given figure 2 where the impedance is given in p.u. preserve all the nodes. **(13)**

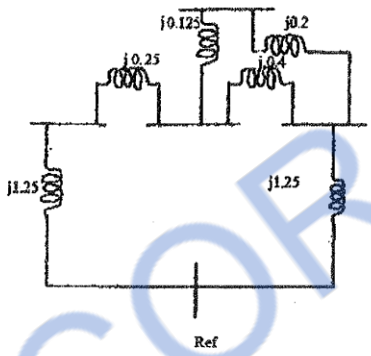

Figure 2

12. a) For the system shown in fig.3, determine the voltages at the end of the first iteration by Gauss-Seidal method. Assume base MVA as 100. **(13)**

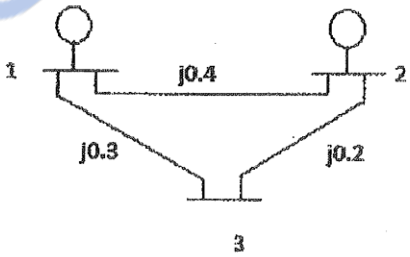

Figure 3

Bus No.	Voltage	Generator		Load		Q_{min}	Q_{max}
		P	Q	P	Q	MVAR	MVAR
1	1.05 ∠0° p.u.	–	–	–	–	–	–
2	1.02 p.u.	0.3 p.u.	–	–	–	–10	100
3	–	–	–	0.4 p.u.	0.2 p.u.	–	–

(OR)

b) Perform an iteration of Newton-Raphson load flow method and determine the power flow solution for the given system. Take base MVA as 100. **(13)**

Line	Bus From	Bus To	R(p.u.)	X(p.u.)	Half line charging admittance (Yp/2 (p.u.))
1	1	2	0.0839	0.5183	0.0636

Bus	P_L	Q_L
1	90	20
2	30	10

13. a) Figure shows a part of a power system, where the rest of the system at two points of coupling have been represented by their Thevenin's equivalent circuit (or by a voltage source of 1 pu together its fault level which corresponds to the per unit value of the effective Thevenin's impedance). **(13)**

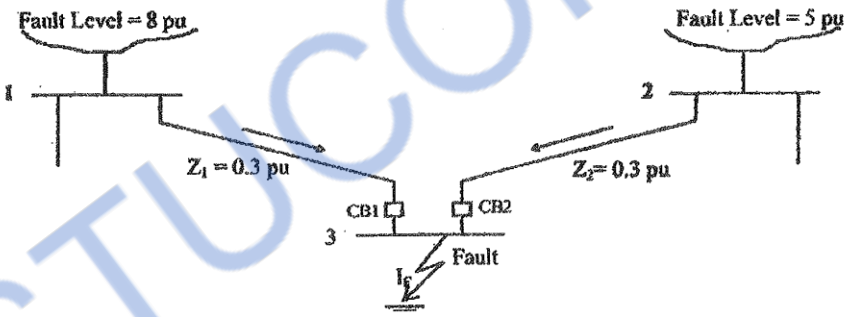

Figure 3

With CB1 and CB2 open, short circuit capacities are

SCC at bus 1 = 8 p.u. gives Zg1 = 1/8 = 0.125 pu

SCC at bus 2 = 5 p.u. gives Zg2 = 1/5 = 0.20 pu

Each of the lines are given to have a per unit impedance of 0.3 pu.

Z1 = Z2 = 0.3 p.u.

(OR)

b) Explain how the fault current can be determined using Z_{bus} with neat flow chart. **(13)**

14. a) Brief discuss about the analysis of asymmetrical Faults in the power system with neat circuit diagrams and necessary equations. **(13)**

(OR)

b) It is proposed to conduct fault analysis on two alternative configurations of the 4-bus system.

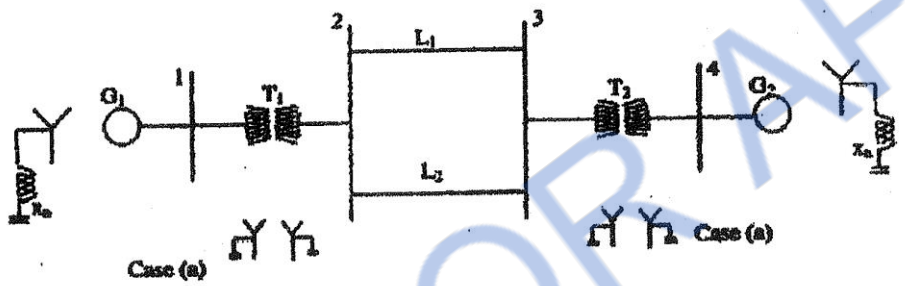

G_1, G_2 : 100 MVA, 20 kV, $x^+ = x^- = x_d'' = 20\%$; $x_0 = 4\%$; $x_n = 5\%$.

T_1, T_2 : 100 MVA, 20 kV/345 kV; $X_{leak} = 8\%$

L_1, L_2 : $x^+ = x^- = 15\%$; $x_0 = 50\%$ on a base of 100 MVA

For a three phase to ground (solid) fault at bus 4, determine the fault current and MVA at faulted bus, post fault bus voltages, fault current distribution in different elements of the network using Thevenin equivalent circuit. Draw a single-line diagram showing the above results. **(13)**

15. a) i) Discuss the classification of power system stability problems in the power system. **(6)**

ii) Derive the swing equation of a synchronous machine swinging against an infinite bus. **(7)**

(OR)

b) A 60 Hz synchronous generator having inertia constant H = 9.94 MJ/MVA and a transient reactance $X_d' = 0.3$ per unit is connected to an infinite bus through a purely reactive circuit as shown in figure. Reactances are marked on the diagram on a common system base. The generator is delivering real power of 0.6 per unit, 0.8 power factor lagging to the infinite bus at a voltage of V = 1 per unit. Assume the per unit damping coefficient is D = 0.138. Consider a small disturbance of $\Delta\delta = 10° = 0.1745$ radian (the breakers open and then quickly close). **(13)**

i) Obtain equations describing the motion of the rotor angle and the generator frequency.

ii) The maximum power input that can be applied without loss of synchronism.

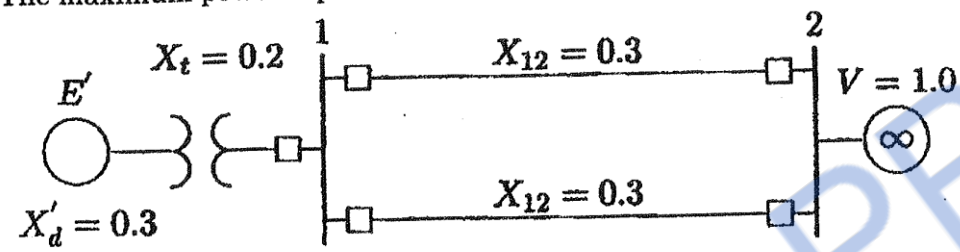

PART – C **(1×15=15 Marks)**

16. Describe the importance of stability analysis of in power system planning and operation. **(15)**

Reg. No. : | | | | | | | | | | | | |

Question Paper Code : 50485

B.E./B.Tech. DEGREE EXAMINATION, NOVEMBER/DECEMBER 2017
Fifth Semester
Electrical and Electronics Engineering
EE 6501 – POWER SYSTEM ANALYSIS
(Regulations 2013)

Time : Three Hours | Maximum : 100 Marks

Answer ALL questions

PART – A **(10×2=20 Marks)**

1. Define per unit value of an electrical quantity and write the equation for base impedance for a three phase power system.

2. Write the equation for per unit impedance if change of base occurs.

3. What is the need for load flow analysis ?

4. Mention the various types of buses in power system with specified quantities for each bus.

5. State and explain symmetrical fault.

6. What is bolted fault or solid fault ?

7. What are the features of zero sequence current ?

8. Write down the equation to determine symmetrical components currents from unbalanced currents.

9. State equal area criterion.

10. Define transient stability of a power system.

PART – B (5×13=65 Marks)

11. a) The single line diagram of an unloaded power system is shown in figure 11(a) along with components data determine the new per unit values and draw the reactance diagram. Assume 50 MVA and 13.8 KV as new base on generator 1. **(13)**

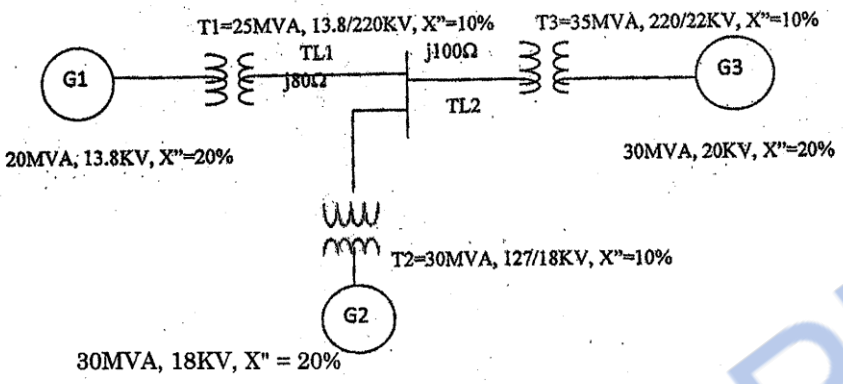

(OR)

b) Describe the Z_{Bus} building algorithm in details by using a three bus system. **(13)**

12. a) With a neat flow chart, algorithm and explain the computational procedure for load flow solution using Gauss-Seidal Methods. **(13)**

(OR)

b) Draw the detailed flow chart and explain he algorithm of Newton-Raphson method when the system contains all types of buses. **(13)**

13. a) A generating stations feeding 132 KV system is shown in Fig. 13(a). Determine the total fault current, fault level and fault current supplied by each alternator for a 3 phase solid fault at the receiving end bus. The length of the transmission line is 150 KM long. **(13)**

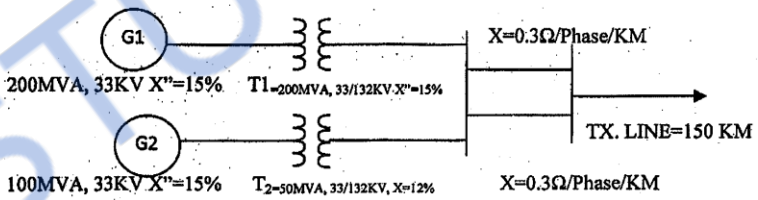

(OR)

b) A symmetrical fault occurs at bus 4 for the system shown in fig. 13(b). Determine the fault current using Z_{bus} building algorithm. **(13)**

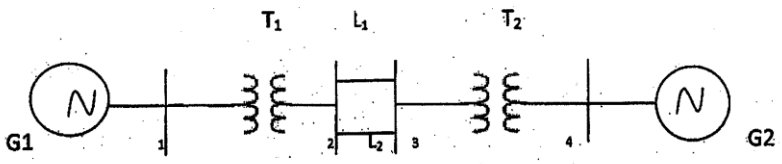

G1, G2 : 100 MVA, 20 KV, X" = 15% Transformers T1, T2 : $X_{Leakage}$ = 9%

L1, L2 : X" = 10%

14. a) i) What are the assumption to be made in short circuit studies ? **(4)**

ii) Deduce and draw the sequence network for LLG fault at the terminal of unloaded generator. **(9)**

(OR)

b) Derive the expression for fault current in line fault on unloaded generator. Draw an equivalent network showing the interconnection of networks to simulate line to ground fault. **(13)**

15. a) i) A generator is operating at 50 Hz, delivers 1.0 p.u. power to an infinite bus through a transmission circuit in which resistance is ignored. A fault takes place reducing the maximum power transferred to 0.5 p.u. Before the fault, the power was 2.0 p.u. and after the clearance of the fault it is 1.5 p.u. by the use of equal area criterion, determine the critical clearing angle. **(8)**

ii) Discuss the methods by which transient stability can be improved. **(5)**

(OR)

b) Write the computational algorithm for obtaining swing curves using modified-Euler method. **(13)**

PART – C **(1×15=15 Marks)**

16. a) i) Distinguish between steady state stability and dynamic stability. **(8)**

ii) Explain the importance of stability analysis in power system. **(7)**

(OR)

b) Explain the term critical clearing angle and critical clearing time in connection with the transient stability of a power system. **(13)**

Question Paper Code : 71776

B.E./B.Tech. DEGREE EXAMINATION, APRIL/MAY 2017.

Fifth Semester

Electrical and Electronics Engineering

EE 6501 — POWER SYSTEM ANALYSIS

(Regulations 2013)

Time : Three hours | Maximum : 100 marks

Answer ALL questions.

PART A — (10 × 2 = 20 marks)

1. What are the advantages of per unit computation.
2. A Y corrected generator rated at 300 MVA, 33kV has a reactance of 1.24 p.u. Find the ohmic value of the reactance.
3. Compare Newton Raphson and Gauss Seidal methods of load flow solutions.
4. Write the quantities that are associated with each bus in a system.
5. What is the significance of subtransient reactance and transient reactance in short circuit studies?
6. For a fault at a given location, rank the various faults in the order of severity.
7. Express the unbalanced voltages in terms of symmetrical components.
8. Draw the zero-sequence network of Y/Δ transformer with neutral ungrounded.
9. Define swing curve. What is the use of Swing curve?
10. State Equal Area Criterion.

PART B — (5 × 16 = 80 marks)

11. (a) 300 MVA, 20 kV, 3Φ generator has sub transient reactance of 20%. The generator supplies 2 synchronous motors through a 64 km transmission line having transformers at both ends as shown in Fig.11.a. In this, T1 is a 3Φ transformer 350 MVA, 20/230 kV, 10% reactance & T2 is made of 3 single phase transformer of rating 100 MVA, 127/13.2 kV, 10% reactance.

Series reactance of the transmission line is 0.5 Ω/km. The ratings of 2 motors are: M1=200 MVA, 13.2 kV, 20% & M2 = 100 MVA, 13.2 kV, 20%. Draw the reactance diagram with all the reactance's marked in p.u. Select the generator rating as base values. (16)

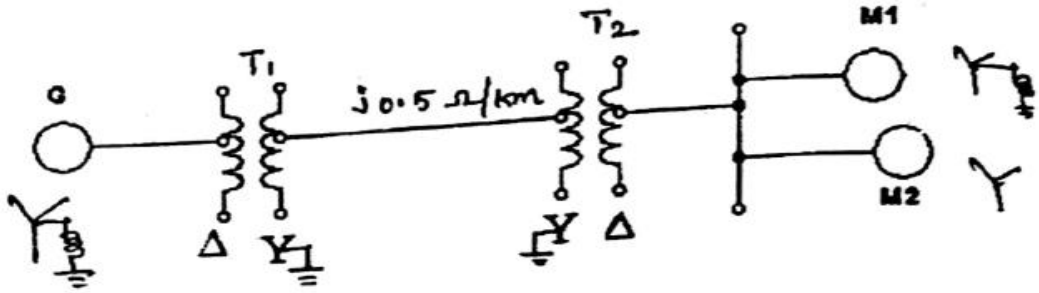

Fig.11.a.

Or

(b) Form bus admittance matrix for the data given below using Singular transformation method. Take node '6' as reference node. (16)

Elements	Bus code	X (p.u.)
1	1-2	0.04
2	1-6	0.06
3	2-4	0.03
4	2-3	0.02
5	3-4	0.08
6	4-5	0.06
7	5-6	0.05

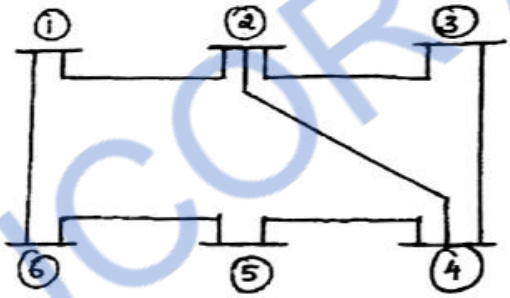

12. (a) With a neat flow chart, explain the computational procedure for load flow solution using Newton Raphson iterative method when the system contains all types of buses. (16)

Or

(b) Single line diagram of a simple power system, with generators at busses 1 and 3 is shown in Fig. 12.b. The magnitude of voltage at bus 1 is 1.05 p.u. Voltage magnitude at bus 3 is fixed at 1.04 p.u. with active power generation of 200 MW. A load consisting of 400 MW and 250 MVAR is taken from bus 2. Line impedances are marked in p.u. on a 100 MVA base and the line charging susceptances are neglected.

71776

Determine the voltage at buses 2 and 3 using Gauss-Seidal method at the end of first iteration. Also calculate Slack bus power.

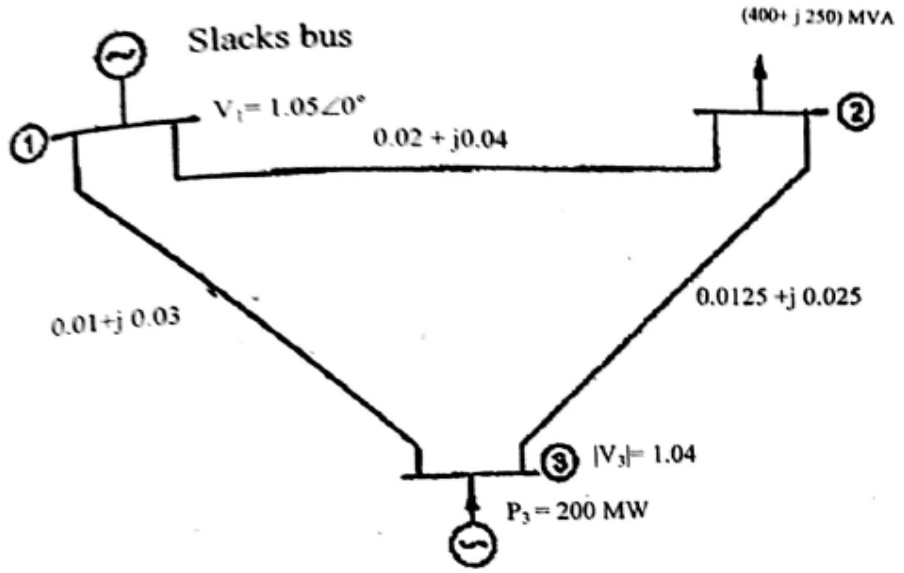

Fig.12.b.

(a) (i) A 3 phase. 5 MVA, 6.6 kV alternator with a reactance of 8% is connected to a feeder series impedance (0.12 + j0.48) ohm/phase/km through a step up transformer. The transformer is rated at 3 MVA, 6.6 kV/33 kV and has a reactance of 5%. Determine the fault current supplied by the generator operating under no load with a voltage of 6.9 kV, when a 3phase symmetrical fault occurs at a point 15 km along the feeder. (8)

(ii) Draw the detailed flowchart, which explains how a symmetrical fault can be analyzed using Z_{BUS}. (8)

Or

(b) A 100 MVA, 11 kV generator with X" = 0.20 p.u is connected through a transformer and line to a bus bar that supplies three identical motor as shown in Fig and each motor has X"= 0.20 p.u and X'= 0.25 p.u on a base of 20 MVA,33 kV ,the bus voltage at the motors is 33 kV when three phase balanced fault occurs at the point F. Calculate (i) Sub transient current in the fault (ii) Sub transient current in the circuit breaker B (iii) Momentary current in the circuit breaker B (iv) The current to be interrupted by C.B B in 5 cycles. (16)

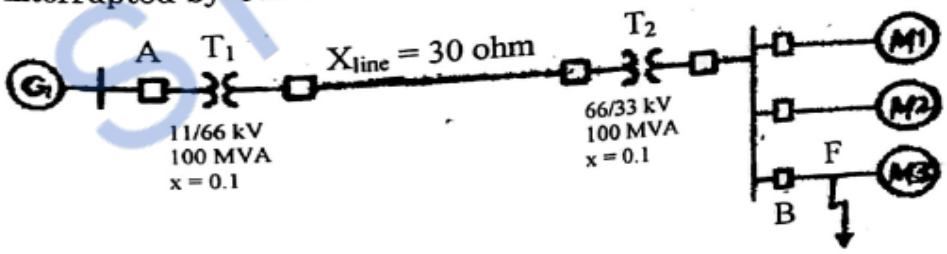

Fig.13.b.

14. (a) (i) Derive the expression for fault current in line to line fault on unloaded generator and draw an equivalent network showing the interconnection of networks. (10)

(ii) A 3 phase salient pole synchronous generator is rated 30 MVA, 11 kV and has a direct axis subtransient reactance of 0.25 p.u. The negative and zero sequence reactances are 0.35 and 0.1 p.u. respectively. The neutral of the generator is solidly grounded. Calculate the subtransient current in the generator when a line to line fault occurs at the generator terminals with generator operating unloaded at rated voltage. (6)

Or

(b) Two 11 kV, 20 MVA, three phase star connected generators operate in parallel as shown in Fig. The positive, negative and zero sequence reactance of each being respectively j 0.18, j 0.15, j 0.10 p.u. The star point of one of the generator is isolated and that of the other is earthed through a 2.0 ohm resistor. A Single line to Ground fault occurs at the terminals of one of the generators. Estimate (i) fault current (ii) current in grounded resistor and (iii) Voltage across grounding resistor. (16)

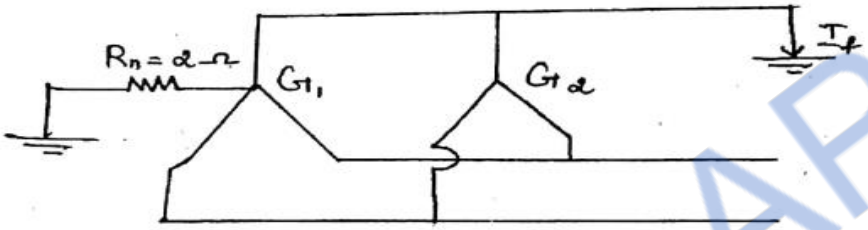

Fig.14.b.

15. (a) (i) Discuss the methods by which transient stability can be improved. (6)

(ii) Find the critical clearing angle of the system shown in Fig. 15.a., for a 3 phase fault at the point 'F'. The generator is delivering 1.0 pu. power under prefault conditions. (10)

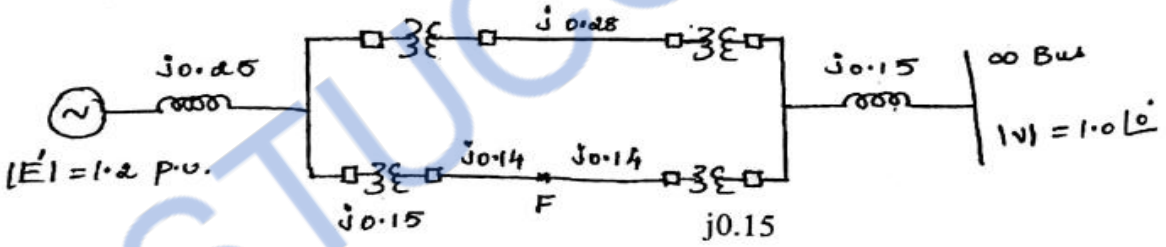

Fig.15.a.

Or

(b) Derive the swing equation of a single machine connected to an infinite bus system and explain the steps of solution by Runge -Kutta method. (16)

Question Paper Code : 80377

B.E./B.Tech. DEGREE EXAMINATION, NOVEMBER/DECEMBER 2016.

Fifth Semester

Electrical and Electronics Engineering

EE 6501 — POWER SYSTEM ANALYSIS

(Regulations 2013)

Time : Three hours | Maximum : 100 marks

Answer ALL questions.

PART A — (10 × 2 = 20 marks)

1. State the advantage of per unit analysis.

2. How are the loads represented in the reactance and Impedance diagram?

3. What is Jacobian matrix?

4. Write the need for Slack bus in load flow analysis.

5. What is the need for short circuit study?

6. How the shunt and series faults are classified?

7. Define short circuit capacity.

8. Why the neutral grounding impedance Zn appears as 3Zn in zero sequence equivalent circuit?

9. Define Voltage Stability.

10. State few techniques to improve the stability of the power system.

PART B — (5 × 16 = 80 marks)

11. (a) Prepare a per phase schematic of the system shown in Fig. 11(a) and show all the impedance in per unit on a 100 MVA, 132 kV base in the transmission line circuit. The necessary data are given as follows: (16)

G1 : 50MVA, 12.2kV, X = 0.15p.u

G2 : 20MVA, 13.8kV, X = 0.15 p.u

T1 : 80MVA, 12.2/161kV, X = 0.1 p.u

T2 : 40MVA, 13.8/161kV, X = 0.1 p.u

Load : 50MVA, 0.8 pf lag operating at 154 kV

Determine the p.u impedance of the load.

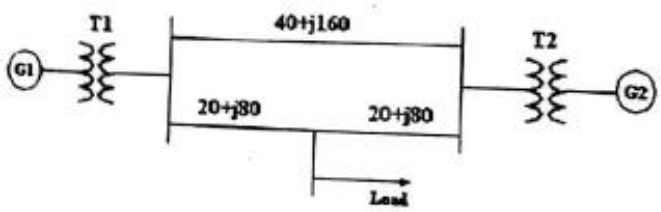

Fig. 11(a)

Or

(b) The parameters of a 4-bus system are as under :

Line starting bus	Line ending bus	Line impedance	Line charging admittance
1	2	0.2+j0.8	j0.02
2	3	0.3+j0.9	j0.03
2	4	0.25+j1.0	j0.04
3	4	0.2+j0.8	j0.02
1	3	0.1+j0.4	j0.01

Draw the network and find bus admittance matrix. (16)

12. (a) With a neat flow chart, explain the computational procedure for load flow solution using Newton Raphson iterative method when the system contains all types of buses. (16)

(b) The Fig. 12(b) shows the one line diagram of a simple 3 bus power system with generators at buses 1 and 3. Line impedances are marked in p.u on a 100 MVA base. Determine the bus voltages at the end of second iteration using Gauss – Seidel method. (16)

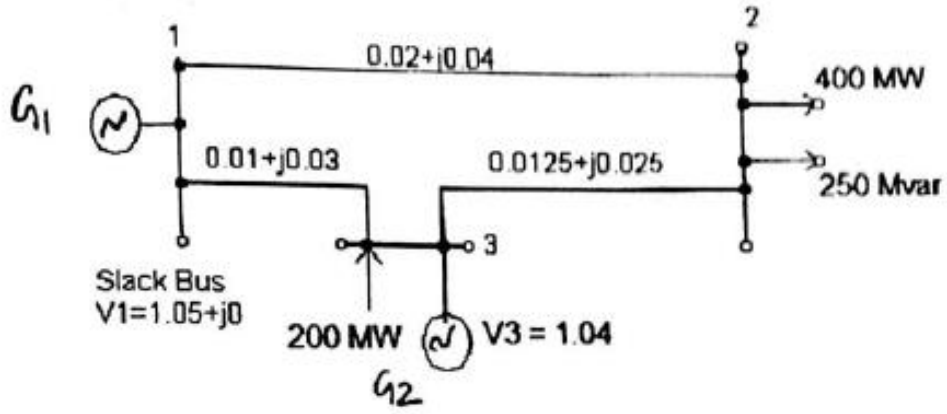

Fig. 12(b)

13. (a) For the radial network shown in Fig. 13(a) 3Φ fault occurs at point F. Determine the fault current and the line voltage at 11.8 kV bus under fault condition.

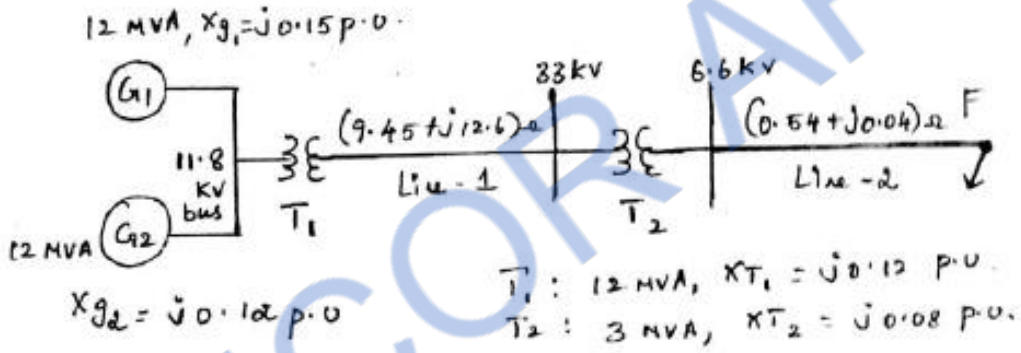

Fig. 13(a)

Or

(b) A 3 phase, 5 MVA, 6.6 kV alternator with a reactance of 8% is connected to a feeder series impedance (0.12 + j0.48) ohm/phase/km through a step up transformer. The transformer is rated at 3 MVA, 6.6 kV/33 kV and has a reactance of 5%. Determine the fault current supplied by the generator operating under no load with a voltage of 6.9 kV, when a 3 phase symmetrical fault occurs at a point 15 km along the feeder. (16)

14. (a) Derive the expression for fault current in line to line fault on unloaded generator. Draw an equivalent network showing the interconnection of networks to simulate line to line fault. (16)

Or

(b) A 30 MVA, 11 kV generator has z1 = z2 = j 0.05. A Line to ground fault occurs at generator terminals. Find the fault current and line voltages during fault conditions. Assume that the generator neutral is solidly grounded and the generator is operating at no load and at rated voltage during occurrence of fault. (16)

15. (a) Derive Swing equation and discuss the importance of stability studies in power system planning and operation. (16)

Or

(b) Find the critical clearing angle and time for clearing the fault with simultaneous opening of the breakers when a three phase fault occurs at point P close to bus 1 as shown in Fig. 15(b). The generator is delivering 1.0 pu. power at the instant preceding the fault.

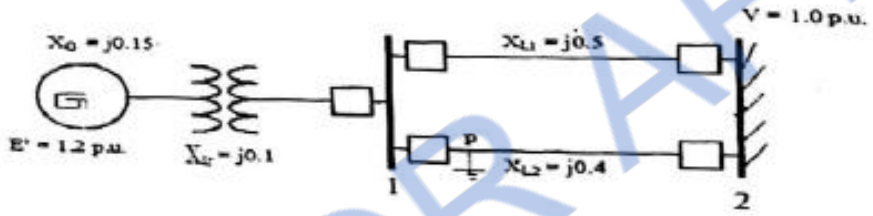

Fig. 15(b)

Question Paper Code : 57320

B.E./B.Tech. DEGREE EXAMINATION, MAY/JUNE 2016

Fifth Semester

Electrical and Electronics Engineering

EE6501 – POWER SYSTEM ANALYSIS

(Regulations 2013)

Time : Three Hours **Maximum : 100 Marks**

Answer ALL questions.

PART – A (10 × 2 = 20 Marks)

1. Define per unit value of an electrical quantity and write the equation for base impedance for a three phase power system.
2. Write the equation for per unit impedance if change of base occurs.
3. What is the need for load flow analysis ?
4. Mention the various types of buses in power system with specified quantities for each bus.
5. State and explain symmetrical fault.
6. What is bolted fault or solid fault ?
7. What are the symmetrical components of a three phase system ?
8. Write down the equation to determine symmetrical currents from unbalanced current.
9. State Equal area criterion.
10. Define transient stability of a power system.

PART – B (5 × 16 = 80 Marks)

11. (a) The data for the system whose single line diagram shown in Fig.11(a) is a follows :

G1: 30 MVA, 10.5 kV, X" = 1.6 ohms

G2 : 15 MVA, 6.6 kV, X" = 1.2 ohms

G3 : 25 MVA, 6.6 kV, X" = 0.56 ohms

T1 : 15 MVA, 33/11 kV, X = 15.2 ohms/phase on H.T side

T2 : 15 MVA, 33/6.2 kV, X=16.0 ohms/phase on L.T side

Transmission line : X = 20.5 ohms/phase

Loads : A : 40 MW, 11 kV, 0.9 p.f lagging

B : 40 MW, 6.6 kV, 0.85 p.f lagging

Choose the base power as 30 MVA and approximate base voltages for different parts. Draw the reactance diagram. Indicate pu reactance on the diagram.

OR

(b) (i) Determine the Ybus matrix by inspection method for line specification as mentioned below.

Line p-q	Impedance in p.u.	Half Line charging admittance in p.u.
1-2	0.04+j0.02	j0.05
1-4	0.05+j0.03	j0.07
1-3	0.025+j0.06	j0.08
2-4	0.08+j0.015	j0.05
3-4	0.035+j0.045	j0.02

(ii) Draw the π-model representation of a transformer with off nominal tap ratio 'α'.

12. (a) With a neat flow chart, explain the computational procedure for load flow solution using Gauss Seidal load flow solution. **(16)**

OR

(b) Draw the flow chart and explain the algorithm of Newton-Raphson iterative method when the system contains all types of buses. **(16)**

13. (a) A generating station feeding a 132 kV system is shown in fig. 13(a). Determine the total fault current, fault level and fault current supplied by each alternator for a 3 phase fault at the receiving end bus. The line is 200 km long. **(16)**

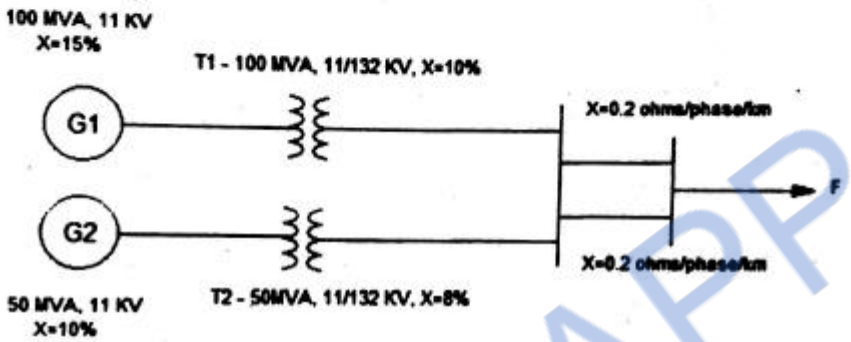

Fig.-13(a)

OR

(b) A Symmetrical fault occurs at bus 4 for the system shown in Fig 13.(b). Determine the fault current using Zbus Building algorithm. **(16)**

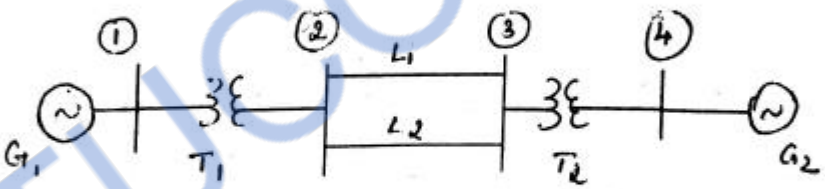

Fig.13(b)

G1, G2 : 100 MVA, 20 kV, $X^{+} = 15\%$

Transformer : $X_{leakage} = 9\%$

L1, L2 : $X^{+} = 10\%$

14. (a) (i) What are the assumptions to be made in short circuit studies ?

(ii) Deduce and draw the sequence network for LLG fault at the terminals of unloaded generator.

OR

(b) Derive the expression for fault current in line to line fault on unloaded generator. Draw an equivalent network showing the interconnection of networks to simulate line to ground fault.

15. (a) (i) A generator is operating at 50 Hz, delivers 1.0 p.u. power to an infinite bus through a transmission circuit in which resistance is ignored. A fault takes place reducing the maximum power transferable to 0.5 p.u. Before the fault, this power was 2.0 p.u. and after the clearance of the fault it is 1.5 p.u. By the use of equal area criterion, determine the critical clearing angle. (1

(ii) Discuss the methods by which transient stability can be improved. (

OR

(b) Write the computational algorithm for obtaining swing curves using Modified Euler method.

(1