Department of Mechanical Engineering

Consolidated Question Papers Unit-wise

Third Semester

ME8451 Manufacturing Technology II

(Regulation 2013)

Unit _ I

THEORY OF METAL CUTTING

Part A

1. Classify the tool wear? **(May 2013,Nov 2013, Apr 2010)**
2. Compare orthogonal and oblique cutting? **(Apr 2011)**
3. Define tool life. **(Apr 2010,May 2011,Nov 2012 & Nov2014)**
4. What are the objectives and functions of cutting fluids? **(Nov 2010)**
5. Briefly explain the effect of rake angle during cutting? **(Nov 2010)**
6. What is orthogonal rake system? **(May 2014)**
7. What is meant by built-up edge? **(Dec 2013, May 2012 & Nov 2012)**
8. How can built up edge formed during machining be avoided? **(Nov 2009)**
9. In an experiment on orthogonal cutting, a chip length of 85mm was obtained from uncut chip length of 202mm while cutting with a tool of 20^0 rake angle using a depth of cut 0.5mm. Determine the shear plane angle. **(Nov 2009)**
10. Give two reasons for flank wear in cutting tool. **(Nov 2011)**
11. What are the advantages of diamond tools? **(May 2012)**
12. Why is lubrication not required while machining cast iron? **(May 2014)**
13. Name any two reasons for flank wear in cutting tools. **(Nov 2011)**
14. When will be the negative rake angles be used? **(May 2013)**
15. State the two situations where positive rake angle is recommended during turning. **(Nov 2011)**
16. Classify the types of metal cutting process. **(Nov 2014)**

Part – B

17. Describe the mechanism of chip formation in orthogonal cutting. Explain the process with simple sketch. **(May 2012, May 2014)**
18. In an orthogonal cutting operation on a work piece of width 2.5mm, the uncut chip thickness was 0.25mm and the tool rake angle was zero degree. It was observed that the chip thickness was 1.25mm.The cutting force was measured to be 900N and the thrust force was found to be 810N . Find the shear angle If the coefficient of friction between the chip and the tool, was 0.5, what is the machining constant C_m. **(Nov 2010)**
19. Mention the functions of cutting fluids and explain the methods to be applied while using cutting fluids during machining.**(May 2014, Nov 2010)**
20. Describe the mechanism of metal cutting? **(Apr 2011)**
21. List the various tool materials used in industry. State the optimum temperature of each of the tool materials. Enumerate the essential requirements of a tool material. **(May 2013, Apr 2011, Nov 2013)**
22. Explain the basic actions & functions of cutting fluids. **(Dec 2010, May 2013,Nov 2014).**
23. Explain the conditions that promote the formation of the following types of chip
    a) Continuous chips without buildup edge.
    b)Continuous chip with buildup edge
    c)Discontinuous chips **(May 2011,2010,Nov 2010,2011,2014)**
24. What is the main function of cutting fluids? List the characteristics of cutting tool materials. **(May 2014,Nov 2010)**
25. How is metal removed in metal cutting? Explain the process with simple sketch. **(May 2014)**
26. Discuss the advantages and limitations of 1) cemented carbide 2) CBN. Describe the characteristics of a cutting tool material. And explain about continuous and continuous chip with BUE with diagram. **(Nov 2011)**
27. With a help of a sketch show crater & flank wear. Explain the types & applications of different cutting tools. **(Nov 2011)**
28. I)The Taylor tool life equation for machining C-40 steel with HSS cutting tool at a feed of 0.2mm/min and depth of cut of 2mm is given by vtn=c, c,n are constant. The following V and T observations have been noted.

V m/min	25	35
T min	90	20

Calculate 1) n and C 2) hence recommend the cutting speed for a desired tool life of 60min. **(Apr 2011,May 2013)**

29.i) Draw three views of a single point cutting tool and indicate various angles.

ii) During an orthogonal turning operation of C20 steel, the data are recorded. Rake angle 10^0, chip thickness 0.48mm. width of cut 2mm, feed 0.25mm/rev. tangential cutting force 1200N, feed thrust force 300N, cutting speed 2.5 m/s. find the shear force at the shear plane, also find kinetic coefficient of friction at chip tool interface. **(Nov 2012)**

30.i) during straight turning of 24mm dia steel bar at 300rpm with HSS tool , a tool life of 9min was obtained. When the same bar was turned at 250 rom, the tool life increased to 48.5min. What will be the tool life at 280 rpm.

ii) Discuss the following tool materials with respect to composition and properties 1) HSS 2) cemented carbides

iii) The end of a pipe was orthogonally cut with a tool of 20^0 rake angle. The cut chip length was 85mm corresponding to uncut chip length of 202mm. if the depth of cut was 0.5mm, find the chip thickness and shear plane angle. **(Nov 2012)**

31.Write note on different tool wear mechanism in metal cutting. Write notes on cutting fluids in metal cutting. **(Nov 2013)**

32.i) Explain Merchant force cycle along with assumptions.

ii) What is meant by orthogonal and oblique cutting? **(Apr 2010)**

33.i) In an orthogonal cutting test with a tool of rake angle 10^0 the following observations are made, chip thickness ratio 0.3, horizontal component of cutting force 1650N. From Merchants theory, calculate various components of cutting forces & coefficient of friction at chip tool interface.

ii) Describe the mechanism of chip formation in orthogonal cutting. **(May 2012)**

34.i) Explain the mechanisms of tool wear 1) attrition 2) diffusion

ii) A cutting tool when used for machining work piece at a cutting speed of 50m/min lasted for 100min. take n=0.26 in the Taylor tool life equation, determine 1) life of tool for an increase in cutting speed by 25% 2) cutting speed to obtain a tool life of 180 min.

iii) A specimen of 100mm length along the stroke of shaper is machined with 15^0 rake angle. The uncut chip thickness is 1.5mm. if chip length of 40mm is obtained during one stroke of machining, find the shear plane angle and thickness of cut chip. **(May 2012)**

35. The useful tool life of a HSS tool machining mild steel at 18m/min is 3 hours. Calculate the tool life when the operates at 24m/min (assume n=0.125) **(Nov 2014).**

UNIT-II TURNING MACHINES

Part-A

1. What is the function of apron? **(AU nov 2010 & 2012)**
2. List any four methods by which taper turning is done in a center lathe **(AU apr 2010& 2011) (AU nov 2011)**
3. Distinguish between Capstan lathe and Turret lathe. **(AU apr 2010)**
4. State the different methods of taper turning. **(AU apr 2010)**
5. What are the advantages of using a collect chuck? **(AU Dec 2008)**
6. What is the need of automatic lathes? **(AU dec 2013)**
7. What are the limitations of centre lathe over automatic lathe? **(AU may 2012).**
8. State the various parts mounted on the carriage. **(AU may 2013).**
9. What are the types of single spindle automatic lathes? **(AU may 2013).**
10. What are the specifications of centre lathe? **(AU dec 2013).**
11. What is the purpose of tumbler gear mechanism in lathe? **(AU may 2012).**
12. Explain lathe bed and carriage of a lathe. **(AU nov 2010)**
13. What are the limitations of centre lathe**(AU nov 2011)**
14. Draw a neat sketch of Geneva mechanism used in turret lathe for automatic indexing. **(AU apr 2011)**
15. What are programmed automatic lathes? **(AU may 2014).**
16. What is a centre gauge that used in threading? **(AU may 2014).**
17. State the purpose of providing lead cam in single spindle automatic screw cutting machine. **(AU nov 2012)**
18. State the various feed mechanisms used for obtaining automatic feed. **(AU nov 2014).**
19. What is the use of mandrels? **(AU nov 2014).**

Part-B

20. Explain the various taper turning methods? **(AU nov 2010&2012) (AU nov 2013) (AU nov 2014).**
21. Discuss about special attachments of lathe. **(AU may 2013).**
22. Describe the turret indexing mechanism and indicate the principal parts of capstan lathe. **(AU nov 2011)**
23. Explain about parallel and progressive action multispindle automatics. Write the procedure of tool layout for automatic screw machine. **(AU may2014)**
24. Mention the specifications of lathe with a neat sketch. **(AU nov 2010)**
25. Describe the constructional features of Swiss type automatic screw machine. **(AU apr 2010) (AU nov 2011) (AU apr 2011) (AU nov 2014).**
26. Describe with a neat sketch automatic screw machine. **(AU may 2014) (AU nov 2013).**
27. Explain the difference between capstan and turret lathe. **(AU nov 2013).**
28. Explain the different work holding devices used in lathe **(AU may 2012) (AU nov 2010) (AU may 2013) (AU may 2014)**
29. i) Describe the single spindle automatic lathe. **(AU may 2013)**
    ii) Compare the operational and other features of single and multi spindle automatic lathes. **(AU may 2012)**
30. Explain the method of thread cutting using compound slide in a lathe**(AU may 2014) (AU nov 2011)**
31. List the various lathe accessories. How does a 4 jaw chuck differ from 3 jaw chuck? What is meant by tool layout of turret lathe **.(AU apr 2010)**
32. Explain the bar feeding mechanism used in turret lathe **(AU apr 2011) (AU nov 2011)**
33. i) Calculate the change gears to cut a single start thread M16 of 2mm pitch on a centre lathe having a lead screw of 6mm pitch. Calculate the depth of cut and number of passes preferred. (a typical set contains the following set of gears with number of teeths: 20,25,30,35,40,45,50,55,60,65 & 70)
    ii) Draw neat sketches of steady and follower rest and brief their applications. **(AU apr 2011)**
34. How will you specify the capacity of a lathe? Indicate the specifications on a line diagram. Explain about turret indexing mechanism in turret lathe. . **(AU nov 2012)**
35. Sketch a line diagram of a capstan lathe and turret lathe and indicate the principle parts. State the functions of parts. **(AU nov 2012) (AU nov 2014).**

36. Explain the working principle of turret lathe. Discuss any 2 special attachments on lathe. Discuss the main parts of a turret lathe. Describe the special features of a turret lathe. **(AU apr 2010) (AU May 2013) (AU nov 2014).**
37. A blank 180mm long and 70mm dia is to be machined in a lathe to 175mm long and 60mm dia. The work piece rotates at 450rpm, feed is 0.3mm/rev and maximum depth of cut is 2mm. for turning operation the approach plus over travel distance is 6mm. assuming that the facing operation is done after the turning, calculate the machining time. **(AU may 2012)**

UNIT-III SHAPER, MILLING AND GEAR CUTTING MACHINES

PART-A

1. Define the cutting speed, feed and machining time for drilling. **(AU nov 2010)**
2. What is the difference between up milling and down milling? **(AU apr 2011& nov 2013) (AU nov 2014).**
3. How do you classify milling cutters? **(AU apr 2010)**
4. How are shaping machines classified? **(AU may 2012)**
5. What is climb milling? Mention its advantages.**(AU nov2011)**
6. What is the difference between a plain and universal milling machine?**(AU nov2012)**
7. Mention any four specifications of shaper. **(AU may2013)**
8. Draw the nomenclature of a standard drill. **(AU Nov2013) (AU nov 2014).**
9. List the gear generating process **.(AU may2013) (AU nov 2014).**
10. Mention any two advantages of gear hobbing. **(AU nov2011)**
11. Compare gear forming with gear generation method. **(AU apr2010)**
12. What is deep hole drilling? State its applications **(AU nov2011)**
13. Mention any two advantages of gear hobbing. **(AU nov 2011)**
14. Give the function of flutes on taps. **(AU may 2014).**
15. What is the difference between face milling and end milling? **(AU nov 2009)**
16. What is the need of honing process? **(AU nov 2014).**

PART-B

17. Discuss the principle of operation of a shaper with a neat sketch. Explain how the ram is made to reciprocate & how the stroke length is altered and the ends of stroke of the ram are positioned relative to work piece. **(AU nov 2010& 2012).**
18. With a neat sketch explain the column and knee type milling machine and name its main parts. **(AU nov 2010) (AU may 2013) (AU nov 2014).**
19. With a line diagram, describe the construction of radial drilling machine. Sketch the twist drill & indicate the helix angle, point angle, chisel angle and other names and parameters **(AU nov 2010,2011&2012).**
20. Sketch and explain the hydraulic drive of a horizontal shaper. How will you cut flat surface, slots & splines using milling machine.**(AU apr& nov 2011, may 2014).**
21. i) Discuss the common work holding devices used in shaper.**(AU apr 2010)**

    ii) Write the applications of shaper. **(AU nov 2014).**
22. i)Sketch and describe the following operations performed in milling machine 1) plain milling 2) face milling 3) end milling 4) dovetail milling. **(AU apr 2010,2012& 2013)**

    ii) sketch the following operations performed in drilling machine i) drilling ii)reaming iii) boring iv) counter boring v) counter sinking vi) spot facing vii) tapping viii) trepanning. **(AU may 2012)**
23. Describe gear forming and shaping. **(AU nov 2010) (AU nov 2014).**
24. i) Explain the principle of gear hobbing with neat sketches. **(AU apr 2010&2013)(AU nov 2011)**

    ii) What are the advantages of gear hobbing process? **(AU nov 2014).**
25. i) List the advantages, limitations and disadvantages of gear shaping process. **(AU apr 2010 & 2011)**

    ii) Explain how a spur gear is machined in a gear hobbing machine. **(AU apr 2011)**
26. Explain different types of drilling machines with their specific features. **(AU may 2010)**
27. Explain the working principle of jig boring machine. Describe the construction of plain and end milling cutters. **(AU nov 2011)**
28. With a neat sketch explain the working of vertical boring machine.**(AU may 2013)**
29. State the difference between shaper & planer. State the difference between horizontal and vertical spindle column and knee type milling machines. **(AU may 2013)**

30. Explain the indexing mechanism of a dividing head of a milling machine. Write notes on reaming. **(AU may 2014)**
31. What is deep hole drilling? List the measures that are taken to avoid drill run off and drill straight holes. **(AU may 2014).**
32. Sketch quill mechanism. Write its main parts and their functions. **(AU apr 2011)**
33. Write notes on BTA deep hole drilling. **(AU nov 2013).**

UNIT-IV ABRASIVE PROCESS AND BROACHING

PART-A

1. What are the types of surface grinder? **(AU nov 2011)**
2. List the parameters which affect the MRR in abrasive jet machining. **(AU apr 2011)**
3. Define hardness of the grinding wheel. **(AU nov 2010)**
4. What is tool post grinder? **(AU may 2014)**
5. What is meant by "grade" and "structure" of a grinding wheel? **(AU apr2011)**
6. Mention four important factors that influence the selection of grinding wheel.**(AU Dec 2008).**
7. Name the two artificial abrasive materials.**(AU may& nov 2012)**
8. Write any four applications of abrasive jet machining. **(AU may 2012)**
9. Name the process parameters involved in the lapping process. **(AU nov 2013).**
10. List four applications of broaching machines. **(AU apr 2011)**
11. What is broaching. **(AU apr &nov 2010, nov 2012) .**
12. State the two disadvantages of broaching. **(AU may 2012).**
13. List some of the materials of broaching tools. **(AU may 2014).**
14. How is the grinding wheel designated? **(AU may 2013).**
15. What are grinding points? Sketch the various grinding points. **(AU may 2014).**
16. State the difference between truing and dressing of a grinding wheel. **(AU nov 2013). (AU nov 2009)**
17. Define hardness of grinding wheel. **(AU nov2010)**

PART-B

18. Explain the working mechanism of cylindrical grinding machine and explain its working. Distinguish traverse & plunge grinding. Sketch the set up of grinding wheel and work piece 1) chucking type internal grinding 2) centreless internal grinding **(AU nov 2012) (AU nov 2011)**
19. Explain the working principle and various methods of centre less grinding with a neat sketch. Classify grinding machines. **(AU nov 2010) (AU may 2013) (AU apr 2011) (AU nov 2014).**
20. i) Discuss the various bonding materials used for making grinding wheels.
    ii) Explain three methods of external centreless grinding **(AU apr 2011& may 2014) (AU nov 2009)**
21. Briefly discuss about the different types of abrasives used in a grinding wheel. **(AU may 2014).**
22. Classify the grinding machines. Explain the working principle of centreless grinding process**(AU may 2013)**
23. Write briefly about broaching machines and its operations with neat sketches. **(AU nov 2013) (AU apr 2011) (AU May 2013)**
24. i) Sketch the following i) set up wheels and work piece for through feed centreless grinding. ii) Set up wheels for in feed and end feed centreless grinding.
    ii) Explain the factors to be considered to select a grinding wheel and recommended parameters. **(AU may 2012)**
25. With the help of neat sketch discuss the working of a surface broaching machine. **(AU apr 2011)**
26. Give the specification of grinding wheel. What is meant by dressing & truing of grinding wheel? **(AU apr 2010).**
27. Write about tool and cutter grinder. **(AU nov 2013)**
28. Discuss the types of broaches. **(AU apr2010)**
29. Explain the principle of operation of horizontal broaching machine **(AU nov 2014).**
30. How the grinding wheels are designated? And explain with suitable example. **(AU nov 2014).**

UNIT-V CNC MACHINING

PART-A

1. What do you mean by machining center w.r.t.NC machine? **(AU nov 2011)**
2. Distinguish between point to point and continuous path systems. **(AU nov 2011)**
3. Compare closed and open loop NC system **(AU apr 2011) (AU nov 2009)**
4. What is meant by tool magazine in CNC machine? **(AU may 2012)**
5. What is the function of subroutine in NC part programming? **(AU may 2012)**
6. What are the types of motion control system used in NC machines? **(AU nov 2010)**
7. What is meant by APT language? **(AU nov 2010)**
8. State the limitations of CNC machine tool. **(AU apr 2010)**
9. What is a preparatory function? How is it important in CNC programming? **(AU apr 2011) (AU nov 2009)**
10. With reference to CNC manual part programming what is linear interpolation. **(AU nov 2012)**
11. What is a canned cycle? **(AU may 2014) (AU apr2010)**
12. Define NC. state their advantages **(AU nov 2013) (AU nov 2014).**
13. Name the major elements of NC machines. **(AU may 2014)**
14. state the differences between CNC & DNC **(AU nov 2013)**
15. What is the difference between incremental and absolute system. **(AU Dec 2008)**
16. Define subroutine **(AU may 2013) (AU nov 2014).**
17. Mention the advantages of stepping motor. **(AU may 2013)**

PART-B

18. What are the special requirements of feed drives in CNC machines? What types of motors are used? Name the method of speed control for each type. Sketch and Explain about hydrostatic slide ways & linear bearing with balls. **(AU may 2012)**
19. List down the main components of NC machine tool& explain its functions. With a neat diagram explain the axis feed drive of a CNC machine& list its advantages. **(AU apr 2011)**
20. Explain the working of NC machine tool with diagram. Also state advantages and limitations of NC machines. Write notes on linear bearing & ball screws. **(AU nov 2011)**
21. i) Explain the following in CNC machining. (a)Linear Interpolation(b)Circular Interpolation(c) cubic interpolation

ii) Describe the spindle and feed drives. State the requirement of the drives of CNC machine tools. **(AU dec 2010) (AU nov 2014).**

22.i) Under what condition of production the NC machine tools are employed?

ii) Explain the various elements of NC machine with closed loop control system. **(AU apr 2010)**

23.i) Explain the main difference between point to point and continuous path of numerically controlled machine tools.

ii) List any five motions and control statements of computer assisted NC programming and explain. **(AU apr 2010)**

24.Explain the working of NC machine tool with a diagram. List the advantages of CNC systems over NC systems . List down the various features of CNC machines. **(AU nov 2009) (AU may 2014).**

25.Explain the various steps to be followed while developing the CNC part programs. What is adaptive control **(AU may 2014).**

26.Write briefly about open, closed loop and adaptive control systems in CNC machine tool. Write about machining centers **(AU nov 2013)**

27.Classify the linear interpolation. Explain the part programming with a suitable example **(AU may 2013)**

28. What are the requirements of slide ways? Explain the machining centre with neat sketch. **(AU may 2013) (AU nov 2014).**

29.i) Explain the following terms 1) tool path compensation 2) cutter radius compensation

ii) With a help of example explain the difference between point to point and continuous path type NC machine tool. **(AU nov 2011)**

30.i) state the specific advantages of recirculating ball screws in CNC machine. Explain the purpose & method of preloading of ball screws.

ii) What are the special requirements of motors for spindle drive? Name the method of speed control for each type. **(AU nov 2012)(au nov 2009)**

31.

(b) (i) Explain point to point and contour path programming with simple program statements. (8)

(ii) Write a program (manual part program) to drill five hole in the locations shown in Fig. 1 and pause at each location where a hole should be drilled. (8)

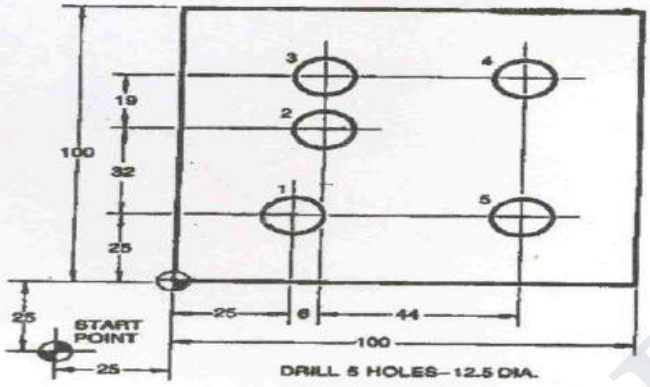

All Dimensions are in mm.

(AU MAY 2012)

32.

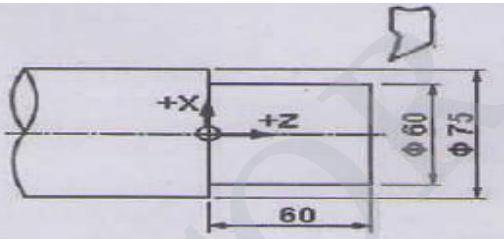

Write a manual part program to turn the component shown on a CNC Lathe from 75 mm bar stock. The following data may be assumed :

(i) There will be two rough turnings and one finish turning. The first cut is with a depth of 3 mm for a length of 58 mm; the second with a depth of 3 mm for a length of 59 mm; and the third with a depth of 1.5 mm for the full length of 60 mm.

(ii) The shoulder of the work-piece is also machined during each cut.

(iii) The spindle speed is 400 rpm and the feed rate is 0.5 mm/rev.

Make a free-hand sketch showing relevant points of tool positions for each of the three turning operations and then write the manual part program. State also what each line of the program does.

Note : If the exact G-codes and M-codes are not known, the student can use his/her own code-numbers, but the function of such codes must be clearly stated. (16)

(AU apr 2011)

33.

(i) With a neat sketch, explain the working of ATC. (6)

(ii) A 110 mm long cylindrical rod of Φ 75 mm is to be turned into a component as shown in Fig-1, using a CNC lathe. Write a CNC program for manufacturing this component. (10)

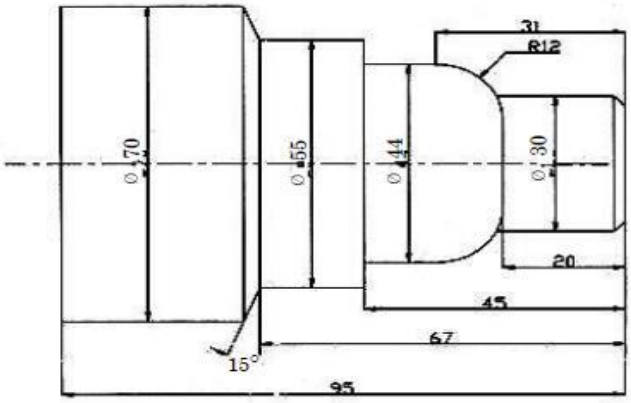

(All dimensions are in mm)
Fig. 1

(AU nov 2010)

34.

(b) (i) Write a part program for that part shown in Fig. 1. (8)

(ii) Write a part program for drilling holes in the part shown in Fig.2. The plate thickness is 20mm. (8)

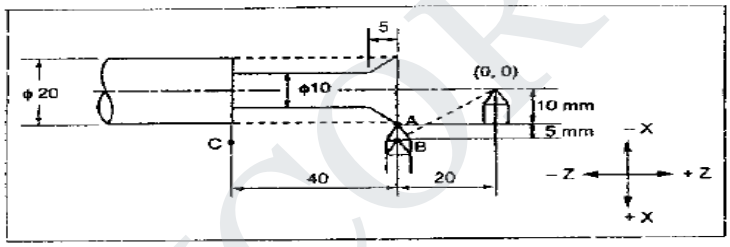

Fig. 1

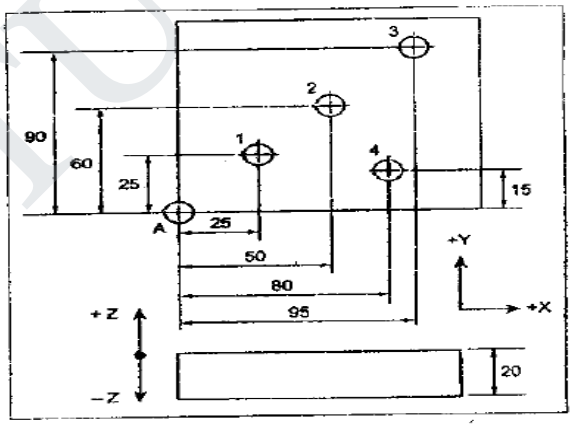

Fig. 2

(AU nov 2012)

35.

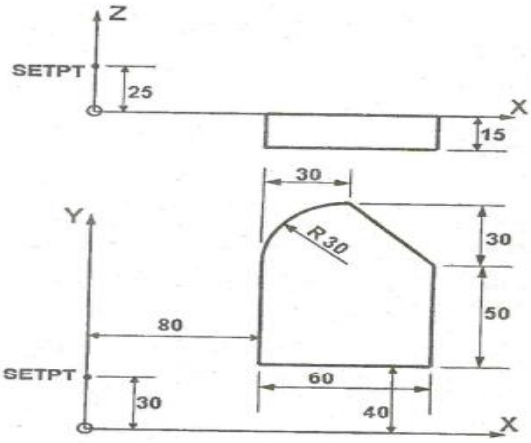

The bracket shown in figure is 15 mm thick. Its profile is slightly oversized by about 1 mm. Write a APT program to do finish milling of the profile of the bracket. The following data may be assumed :

(i) A 20 mm end-mill cutter is to be used.

(ii) The X, Y, Z axes are as shown in the figure.

(iii) The start point is at (0, 30, 25)

(iv) For milling, the spindle speed is 1740 rpm and the feed rate is 500 mm/min.

(v) The post processor statement is MACHIN/UNI. (16)

36. State the different types of CNC machines.

Agni College of Technology

ISO 9001:2008 Institution

Imparting Knowledge. Inculcating values

Department of Mechanical Engineering

ME8451 Manufacturing Technology II

Repetition of Questions

Unit - I

S.No	Topic	Year						
1	Mechanics of chip formation	MJ14	MJ12	MJ11				
2	Types of Chips	MJ15	ND14	ND11	MJ11	ND10	MJ10	
3	Single point cutting tool	ND12						
4	Forces in machining	MJ15	MJ15	MJ10				
5	Cutting tool materials	ND15	MJ14	ND13	MJ13	ND12	ND11	MJ11
6	Tool wear	ND15	MJ15	ND13	MJ12	ND11		
7	Cutting fluids	ND15	ND14	MJ14	ND13	MJ13	ND11	
8	Thermal aspects							
9	Tool Life & its problem	MJ15	ND14	MJ13	ND12	MJ12	MJ11	MJ10
10	Orthogonal & Oblique cutting	ND14	MJ10					

Unit – II

S.No	Topic	Year						
1	Centre lathe							
2	Types of Lathe	MJ15						
3	Work & Tool Holding devices	ND15	MJ15	MJ14	MJ13	MJ12	MJ11	ND10
4	Taper turning methods	ND15	ND14	ND13	ND12	ND10		
5	Thread cutting methods	MJ14	ND11					
6	Special attachments	MJ15	MJ13					
7	Capstan and turret lathes	MJ15	ND14	ND13	MJ13	ND12	ND11	MJ10
8	tool layout	MJ14	MJ10					
9	automatic lathes							
10	Single spindle & multispindle	MJ14	MJ13	MJ12				
11	Swiss type	ND14	ND11	MJ11	ND11	MJ10		
12	Automatic screw type	MJ15	MJ15	ND13	ND11	MJ11		

Unit –III

S.No	Topic	Year						
1	Shaper - Types of operations	MJ15	MJ15	ND14	MJ14	ND12	ND11	MJ11
2	Drilling- Types of operations	MJ14	MJ14	ND13	ND12	MJ12	ND10	MJ10
3	Types of Milling Machine	MJ15	MJ15	ND14	ND13	MJ13	MJ11	ND10
4	Milling operations	MJ15	MJ14	MJ13	MJ12	ND11	MJ10	
5	Gear cutting	ND15	ND10					
6	Gear hobbing	MJ15	ND14	MJ13	ND11	MJ11		
7	Gear shaping processes	MJ15	ND14	MJ11	ND10	MJ10		
8	Gear Finishing	ND15	MJ15	MJ14				
9	Tool and Cutter grinder	ND14	ND13					
10	Boring Machine	ND11						

Unit – IV

S.No	Topic	Year						
1	Grinding wheel	ND15	MJ15	MJ15	ND14	MJ14	MJ12	MJ11
2	Cylindrical grinding	ND12	ND11					
3	Surface grinding							
4	Centreless grinding	MJ15	ND14	MJ13	ND12	MJ11	ND10	
5	Broaching machines	ND15	MJ15	MJ15	ND14	ND13	MJ10	
6	Broaching Operations	ND15	MJ13	MJ11				
7	Slotter	ND14						
8	Finishing process	MJ15	ND13	MJ13	ND12	MJ12	ND11	
9	Abrasive Jet	ND11						

Unit- V

S.No	Topic	Year				
1	Numerical Control (NC) machine tools	ND15	MJ15	MJ14	ND11	MJ11
2	CNC machine	ND15	MJ15	MJ14	MJ10	
3	machining centre	ND14	ND13	MJ13		
4	Control system	MJ14	ND13	MJ10		
5	CNC Drives	ND14	ND12	MJ12	MJ11	ND10
6	Ball Screws and Ball bearing	ND12	ND11			
7	Types of CNC	MJ15				
8	Special features in CNC	MJ12	MJ11			
9	Micromachining					
10	Wafer Machining					
11	Basic in part programming	MJ13	ND11	ND10	MJ10	
12	Part program	ND15				

Agni College of Technology

ISO 9001:2008 Institution
Imparting Knowledge. Inculcating values

Department of Mechanical Engineering

Important questions for university exam

ME8451 Manufacturing Technology II

UNIT 1	
S.No	**Topic**
1	**Mechanics of chip formation & Types of Chips**
2	**Cutting tool materials & Cutting fluids**
3	**Tool wear & Tool Life**
4	Single point cutting tool
5	Orthogonal & Oblique cutting
UNIT 2	
6	Work & Tool Holding devices in Lathe
7	**Capstan and turret lathes**
8	**Taper turning methods**
9	**Swiss type**
10	Automatic screw type
11	**Single spindle & multispindle**
12	Thread cutting methods
13	Special attachments
14	Tool layout
UNIT 3	
15	Shaper - Types of operations
16	**Drilling- Types of operations**
17	**Types of Milling Machine**
18	**Milling operations**
19	**Gear hobbing**
20	**Gear shaping processes**
21	**Gear Finishing**
22	Tool and Cutter grinder

Department of Mechanical Engineering

ME8451 Manufacturing Technology II

TWO MARKS

Unit _ I

THEORY OF METAL CUTTING

1. **Classify the tool wear? (May 2013,Nov 2013, Apr 2010)**
   1. Flank wear
   2. Crater wear
   3. Notch wear

2. **Compare orthogonal and oblique cutting? (Apr 2011)**

Sl. No.	Orthogonal cutting	Oblique cutting
1.	The cutting edge of the tool is perpendicular to the cutting velocity vector.	The cutting edge is inclined at an acute angle with the normal to the cutting velocity vector
2.	The chip flows over the tool face and the direction of chip-flow velocity is normal to the cutting edge.	The chip flows on the tool face making an angel with the normal on the cutting edge.
3.	The cutting edge clears the width of the work piece on either ends.(i.e No side flow)	The cutting edge may or may not clear the width of the work piece.
4.	The maximum chip thickness occurs at its middle.	The maximum chip thickness may not occur at the middle.

3. **Define tool life. (Apr 2010,May 2011,Nov 2012 & Nov2014)**

   Tool life is defined as the time elapsed between two consecutive tool resharpening. During this period the toll serves effectively and efficiently.

4. **What are the objectives and functions of cutting fluids? (Nov 2010)**
   - It is used to cool the cutting tool and work piece
   - It improves surface finish
   - It protects finished surface from corrosion
   - It washes away chips from tool
5. **Briefly explain the effect of rake angle during cutting? (Nov 2010)**

   Effect of back rack angle:

   For softer material greater angle should be given

   For harder material smaller angle is enough

   Effect of Side rack angle

   Curling of chip depends on this angle.
6. **What is orthogonal rake system? (May 2014)**

   It is a tool designation system used to denote a standardized system of specifying the principle tool angles of a single point cutting tool.
7. **What is meant by built-up edge? (Dec 2013, May 2012 & Nov 2012)**

   In single point cutting of metals, a built up edge (BUE) is an accumulation of material against the rake face that seizes to the tool tip, separating it from the chip.
8. **How can built up edge formed during machining be avoided? (Nov 2009)**

   To avoid the formation of built uo edge, coefficient of friction between the chip and tool is minimized by polishing the tool face and providing adequate supply of coolant during the process.
9. **In an experiment on orthogonal cutting, a chip length of 85mm was obtained from uncut chip length of 202mm while cutting with a tool of 20^0 rake angle using a depth of cut 0.5mm. Determine the shear plane angle. (Nov 2009)**

   Chip Thickness Ratio,

   $$r=L_2/L_1 = 85/202=0.4207$$

   Shear plane Angle,

   $$\tan\phi = r.\cos\alpha/\ 1-r.\sin\alpha$$

   $$= 0.4207* \cos 20/\ 1-0.427-\sin 20$$

   $$\phi = 24.786^\circ$$
10. **Give two reasons for flank wear in cutting tool. (Nov 2011)**
    - Machining brittle materials like cast iron
    - Machining feed rate less than 0.15mm/rev.

11. **What are the advantages of diamond tools? (May 2012)**

High grinding efficiency, Low grinding force:

Less heat will be generated by the hole in the grinding process. This can decrease or avoid burns and cracks on the surface of the workpiece, and decrease the equipment's wear and energy consumption.

High wear resistance:

Diamond grinding tools' change in dimension is small. This can lead to good grinding quality and high grinding precision.

Long lifespan, Long dressing period:

This can greatly increase the work efficiency, and improve the workers' labor environment and decrease the product's labor intensity.

12. **Why is lubrication not required while machining cast iron? (May 2014)**

The cast iron contains graphite which acts as a coolant agent. The carbide and coated carbide tools are used for machining which is unaffected by heat generated by machining process.

13. **Name any two reasons for flank wear in cutting tools. (Nov 2011)**

Reason for flank wear in cutting tools:

- Machining brittle materials
- Machining with feed rate less than 0.15m/min.

14. **When will be the negative rake angles be used? (May 2013)**

- It is used when turning with a highly brittle materials.
- In rough turning, negative rake angle is provided for larger depth of cut.

15. **State the two situations where positive rake angle is recommended during turning. (Nov 2011)**

- Positive rake angle is recommended while machining various materials with HSS and cast alloy cutting tools.
- Positive rake angle is also used where the cutting forces and power required for machining should be less.

16. **Classify the types of metal cutting process. (Nov 2014)**

Types of metal cutting process

1. Drilling
2. Milling
3. Boring
4. Shaping & planning
5. Grinding

17. Name the factors that contribute to poor surface finish in cutting?

- Cutting speed
- Feed
- Depth of cut.

18. What are the causes of wear?

The tool is subjected to three important factors such as

1. Force
2. Temperature
3. Sliding action due tool

19. List the essential characteristics of a cutting fluid?

- It should have good lubricating properties to reduce frictional forces and to decrease the power consumption.
- High heat absorbing capacity.
- It should have a high specific heat, high heat conductivity and high film co-efficient.
- High flash point.
- It should be odorless
- It should be non –corrosive to work and tool.

20. Name the various cutting tool materials.

- Carbon tool steel
- High speed steel
- Cemented carbides
- Ceramics
- Diamonds

21. What are the four important characteristics of materials used for cutting tools?

- Hot hardness
- Wear resistance
- High thermal conductivity
- Resistance to thermal shock
- Easy to grind and sharpen
- Low mechanical and chemical affinity for the work material

22. Write Taylor's tool life equation?

Taylor's tool life equation, $VT^n=C$

Where, V = Cutting speed in m/min.

T = Tool life in minute

C = Constant

N = Index depends upon tool and work.

23. What are the factors affecting tool life?

- Cutting speed
- Feed and depth of cut
- Tool geometry
- Tool material
- Cutting fluid
- Work material
- Rigidity of work, tool and machine

24. Define machinability of metal?

Machinability is defined as the ease with which a material can be satisfactorily machined.

25. What is the function of chip breakers?

The chip breakers are used to break the chips into small pieces for removal, safety and to prevent both the machine and work damage.

26. What is chip reduction co-efficient ?

The reciprocal of chip thickness ratio is called chip reduction co-efficient.

$$K=1/r$$

UNIT II
TURNING MACHINES

1. What is the function of apron? (AU nov 2010 & 2012)

It is an integral part of several gears, levers and clutches which are mounted with saddle for moving the carriage along with lead screw while thread cutting.

2. List any four methods by which taper turning is done in a center lathe (AU apr 2010& 2011) (AU nov 2011)

- Form tool method
- Tailstock set over method
- Compound rest method
- Taper turning attachment method

3. **Distinguish between Capstan lathe and Turret lathe.** **(AU apr 2010)**

S.No	CAPSTAN LATHE	TURRET LATHE
1	Turret head is mounted on a ram which slides over the saddle	Turret head is directly mounted on saddle .But it slides on the bed.
2	Turret movement is limited	Turret moves on the entire length of the bed without any restriction

4. **What are the advantages of using a collect chuck?** **(AU Dec 2008)**
   - Job setting will be easy and quicker
   - Heavy cut can be taken
5. **What is the need of automatic lathes? (AU dec 2013)**
   1. Mass production of identical parts.
   2. High accuracy is maintained
   3. Time of production is minimized.
   4. The bar stock is fed automatically.
6. **What are the limitations of centre lathe over automatic lathe?** **(AU may 2012)**
   - It has lower production rate.
   - Degree of automation is nominal
   - It requires very high operator skill
7. **State the various parts mounted on the carriage.** **(AU may 2013)**

   The parts in the carriage are cross slide, compound slide and tool post.
8. **What are the types of single spindle automatic lathes? (AU may 2013)**
   - Automatic cutting off machine
   - Automatic screw cutting machine
   - Swiss type automatic screw machine
9. **What are the specifications of centre lathe?** **(AU dec 2013)**
   - The length between the centres
   - The length of the bed
   - Maximum bar diameter
   - Spindle speed
   - Motor power

10. What is the purpose of tumbler gear mechanism in lathe? (AU may 2012)

It is used to give the desired direction of movement to the lathe carriage, through the lead screw.

11. Explain lathe bed and carriage of a lathe. (AU nov 2010)

Lathe bed:

It is the base of the machine. It carries headstock on its left end and tailstock on its right end.

Carriage:

It is the moving part that slides over the guide ways between headstock and tailstock.

12. What are the limitations of centre lathe. (AU nov 2011)

- It has lower production rate.
- Degree of automation is nominal
- It requires very high operator skill

13. Draw a neat sketch of Geneva mechanism used in turret lathe for automatic indexing. (AU apr 2011)

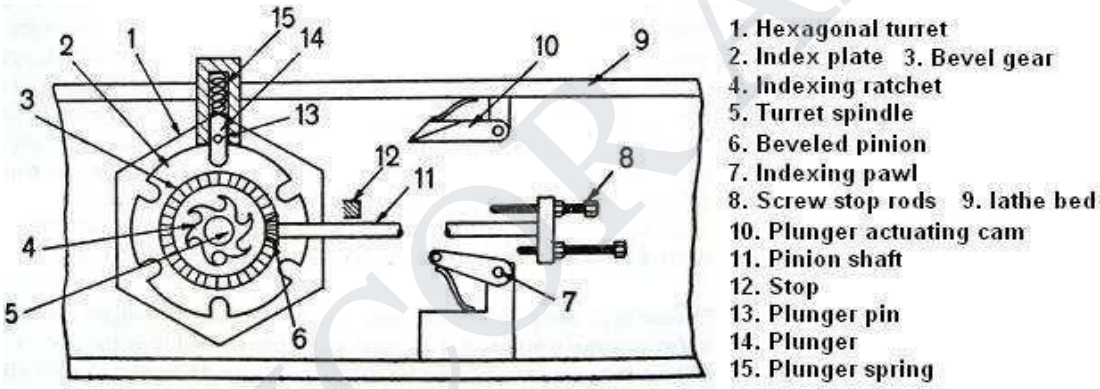

14. What are programmed automatic lathes? (AU may 2014)

The lathe machine which was operated with the help of programme is called as programmed automatic lathe. Example is NC machines and CNC lathes.

15. What is a centre gauge that used in threading? (AU may 2014)

In threading the cutting tool should be very carefully set. The gauge used for setting the threading tool in external and internal threading is known as centre gauge.

16. State the purpose of providing lead cam in single spindle automatic screw cutting machine. (AU nov 2012)

The purpose of providing lead cam in single spindle automatic screw cutting machine is to actuate all the movements of the machine.

17. State the various feed mechanisms used for obtaining automatic feed. (AU nov 2014)

- Halt nut mechanism
- Apron mechanism

18. What is the use of mandrels? (AU nov 2014)

A mandrel is a device used for holding and rotating a hollow work piece that has been previously drilled or bored. The work revolves with the mandrel which is mounted between two centres. The mandrel should be true with accurate centre holes for machining outer surface of the work piece concentric with its bore. To avoid distortion and wear it is made of high carbon steel.

19. What is swing diameter?

The largest diameter of work that will revolve without touching the bed and is twice the height of the center measured from the bed of the lathe.

20. What are the functions of feed rod and lead screw?

Feed rod:

It is used to guide the carriage in a straight line when it moves along the bed.

Lead screw:

It is used to move the carriage while thread cutting operation is carried out. It also ensures the proper speed of work relative to the tool thread cutting operation.

21. Name any four work holding devices?

- Collets
- Chucks
- Fixtures
- Power chucks

22. Define automatic machine?

Automatic machine or simply automats are machines tools in which all the operations required to finish off the work piece are done automatically with out the attention of an operator.

23. What are the advantages of automatic lathes?

- Mass production of identical parts.
- High accuracy is maintained.
- Time of production is minimized.
- The bar stock is feed automatically.

UNIT-III
SHAPER, MILLING AND GEAR CUTTING MACHINES

1. **Define the cutting speed, feed and machining time for drilling. (AU nov 2010)**

Cutting Speed:

It is the peripheral speed of a point on the surface of the drill in contact with the Work piece. It is usually expressed in m/min.

Feed:

It is the distance of a drill moved into the work at each revolution of the spindle. It is expressed in mm/rev.

Machining time:

The time taken to complete the machining process without considering the idle time of machines is called machining time.

2. **What is the difference between up milling and down milling? (Apr 11,Nov 13)**

S.No	Event of operation	Up milling	Down Milling
1	**Direction of travel**	Cutter rotates against the direction of travel of work piece	Cutter rotates in the same direction of travel of work pieces.
2	**Cutting Force**	Increases from zero to max per tooth	Decreases from max. to zero per tooth.

3. **How do you classify milling cutters? (AU apr 2010)**

They are classified based on following factors

- According to the shape of the teeth.
- According to the type of operation
- According to the way of mounting on the machine

4. **How are shaping machines classified? (AU may 2012)**

According to the type of mechanism

- Crank type
- Geared type
- Hydraulic type

According to cutting stroke

- Push type
- Draw type

5. **What is the difference between a plain and universal milling machine?(AU nov2012)**

S.No	Plain Milling	Universal Milling
1	Table can be fed in all three directions	Table can be swiveled on the saddle in horizontal table
2	Machine is more rigid and consists of heavier construction	Universal machine is less rigid one

6. **Mention any four specifications of shaper. (AU may2013)**
   - The length of stroke
   - Maximum horizontal table travel
   - Maximum vertical table travel
   - Maximum vertical tool travel

7. **Draw the nomenclature of a standard drill. (AU Nov2013) (AU nov 2014)**

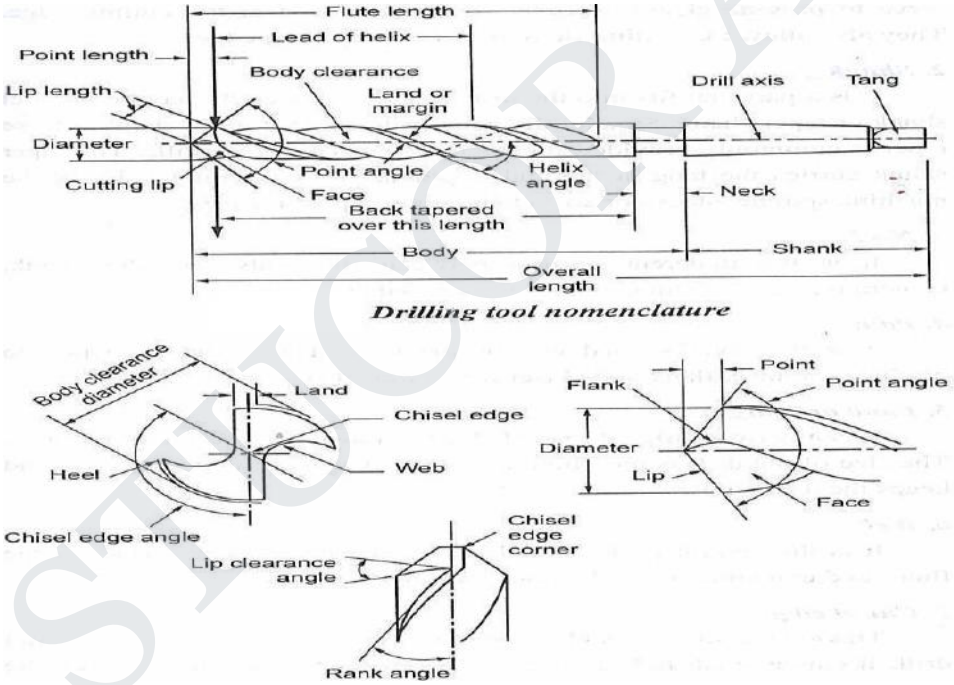

8. **List the gear generating process .(AU may2013) (AU nov 2014)**
   - Gear shaper process
   - Gear hobbing process
   - Rack planning process

9. **Mention any two advantages of gear hobbing. (AU nov2011)**
   - Accurate profile is generated.
   - Multiple gear blanks can be mounted on the some arbor.

10. Compare gear forming with gear generation method. (AU apr2010)

S.No	Gear Forming	Gear Generation
1	The gear forming process form disc or end mill cutters are used.	In gear generation process the cutting tool meshes with gear blank and teeth are developed on the blank.
2	It is performed in milling machine.	It is performed in Gear hobbing machine.

11. What is deep hole drilling? State its applications (AU nov2011)

It is the process to produce very long holes of relatively small diameters.

Applications: crank shafts, long shafts, rifle barrels.

12. Give the function of flutes on taps. (AU may 2014)

The flutes make the chips curl and provide passage for their exit.

13. What is the difference between face milling and end milling? (AU nov 2009)

Face Milling:

Face milling is used to machining flat surfaces which is right angle to the axis of the cutter.

End Milling:

End milling is used for producing flat surface which may be horizontal, vertical or at any angle with respect to position of table.

14. What is the need of honing process? (AU nov 2014)

- The size can be controlled accurately.
- Desired surface finish can be obtained.
- At low cost , high productivity is obtained.

15. What is thread milling?

A thread milling has no chamfer. The mill is inserted into the hole along the axis of the spindle, deep enough to produce full thread depth required.

16. How do specify radial drilling machine?

A drilling machine is specified by the job following items.

1. Maximum size of the drill in mm that the machine can be operate.
2. Table size of maximum dimension of a job can mount on a table in square meter.
3. Maximum spindle speed and range of spindle speeds in r.p.m

17. What are the common work holding devices used on milling machines?

- 'v' blocks.
- Machine vises.
- Milling fixtures.
- Dividing heads

18. Mention the operation performed by planer?

The following operations generally performed in a planer are

- Planning horizontal surface
- Planning vertical surface
- Planning curved surface
- Planning of an angle

19. Write down any four operations performed by a shaper?

i. Machining horizontal surfaces.
ii. Machining vertical surfaces.
iii. Machining inclined surfaces.
iv. Machining irregular surfaces.

20. Compare hydraulic shaper with mechanical shaper?

SL.NO	Hydrulic shaper	Mechanical shaper
1.	smooth cutting operation	Rough and noisy cutting operation
2.	changing of cutting speed is easy	changing of cutting speed is difficult
3.	Higher cutting to return ratio can be obtained	Lower cutting to return ratio
4.	Stroke length can be easily adjusted without stopping the machine	Change of stroke length is not possible with out stopping the machine.

21. What is a shell mill?

A shell mill is a large type of face or end mill that mounts onto an arbor, rather than having an integral shank. Typicaly, there is a hollow or recess in the center of the shell for mounting hardware onto a separate arbor.

22. Write down the rule for gear ratio in differential indexing.

Rule for gear ratio in differential indexing:

Gear ratio = (A-N)/A

where

A- Selected no which can be indexed by plain indexing and approximately equal to N.

N- Required no. of divisions to be indexed.

23. What is meant by "sensitive hand feed"?

In drilling machines, manual sensing of the hand does feeding of the tools towards the work piece. it is called as sensitive hand feed

UNIT-IV
ABRASIVE PROCESS AND BROACHING

1. What are the types of surface grinder? (AU nov 2011)

i) Reciprocating table

- Horizontal spindle
- Vertical spindle.

ii) Rotary table

- Horizontal spindle
- Vertical spindle.

2. List the parameters which affect the MRR in abrasive jet machining. (AU apr 2011)

- Grinding wheel speed
- Type of abrasive used
- Capacity of pump
- Capacity of filter

3. Define hardness of the grinding wheel. (AU nov 2010)

Grade or hardness indicates the strength with which the bonding material holds the abrasive grains in the grinding wheel.

4. What is tool post grinder? (AU may 2014)

It is a machine that supports the cutter while a rotating abrasive wheel is applied to the cutting edge for the purpose of sharpening it.

5. What is meant by "grade" and "structure" of a grinding wheel? (AU apr2011)

Grade:

Grade or hardness indicates the strength with which the bonding material holds the abrasive grains in the grinding wheel.

Structure:

Structure denotes the spacing between the abrasive grains or in other words the density of the wheel.

6. **Mention four important factors that influence the selection of grinding wheel.(AU Dec 2008)**

Constant factors

i. Physical properties of material to be ground
ii. Amount and rate of stock to be removed
iii. Area of contact
iv. Type of grinding machine

Variable factors

i. Work speed
ii. Wheel speed
iii. Condition of grinding wheel

7. **Name the two artificial abrasive materials.(AU may& nov 2012)**

The artificial abrasives are aluminium oxide, silicon carbides, and artificial diamonds.

8. **Write any four applications of abrasive jet machining. (AU may 2012)**

1. It is used for drilling holes, cutting slots, cleaning hard surfaces.
2. It is used for producing high quality surfaces.
3. It is used for reproducing surfaces on a glass surfaces.
4. The process is suitable for machining brittle and heat sensitive materials.

9. **Name the process parameters involved in the lapping process. (AU nov 2013)**

1. Abrasive particle size
2. Lapping pressure
3. Lapping speed
4. Abrasive concentration.

10. **List four applications of broaching machines. (AU apr 2011)**

1. Cylinder blocks
2. Bearing caps
3. Connecting rods
4. Gears and turbine blades

11. **What is broaching. (AU apr &nov 2010, nov 2012)**

Broaching is a machining process in which a tool used is called as broach having series of cutting teeth. Generally the cutting is done by the first and intermediate where as the finishing operation is done by the last few teeths.

12. **State the two disadvantages of broaching. (AU may 2012)**

1. In broaching process, all jobs need a fixture, which is not economical.
2. Sharpening of a broach is difficult and expensive.

13. List some of the materials of broaching tools. (AU may 2014)

1. High speed steels
2. High carbon steel
3. Sintered carbide

14. How is the grinding wheel designated? (AU may 2013)

Grains which denotes the approximate size of abrasive particles and indicates fineness of the grinding wheel. Grade denotes the strength of a bond in the wheel.

15. What are grinding points? Sketch the various grinding points. (AU may 2014)

The bonded abrasive stones in the grinding process are called grinding points.

16. State the difference between truing and dressing of a grinding wheel. (AU nov 2013,AU nov 2009)

Truing is done to make the periphery of grinding wheel concentric with its axis. Whereas the dressing is done to recover the proper cutting action by renovating the face of grinding wheel.

17. What are the types of surfaces that could de produced using plain cylindrical grinders?

- Plain cylindrical parts
- Cylindrical parts
- Cylinders
- Tapers
- Shoulders
- Fillets
- Cams
- Crankshaft

18. State the abrasives sed in manufacture of grinding wheels?

Natural abrasives:

- Corundum (75 to 90% crystalline Al2O3 +IRON OXIDE)
- Diamond

Artificial abrasives:

- Aluminium oxide
- silicon oxide

19. What for lapping is used?

1. Removing small amounts of material from the surfaces of tools.
2. Removing small defects and surface cracks left during previous operations
3. Eliminating small distortion.

20. What is meant by honing?

An abrading process of finishing previously machined surfaces is known as honing.

21. What are the advantages of honing process?

1. Simple process which can be done on any general purpose machines such as lathes and drilling machines.
2. This process can be applied for both internal cylindrical and flat surfaces.
3. Honing enables the maximum stock removing capacity out of entire surface finishing operations.

UNIT-V
CNC MACHINING

1. What do you mean by machining center w.r.t.NC machine? (AU nov 2011)

Machining centre is capable of performing milling, drilling, boring, counter-boring, threading and so many operations.

2. Distinguish between point to point and continuous path systems. (Nov 2011)

Point to point system:

In point to point system the tool is accurately located at some specified position.

Continuous path system:

In continuous path system there is relative motion between the tool and work piece, during the whole operation.

3. Compare closed and open loop NC system. (AU apr 2011) (AU nov 2009)

S.No	Open loop system	Closed loop system
1	No feedback about the result produced due to open loop	Instantaneous feedback about the result produced.
2	No reference for the results	Definite reference for the results

4. What is meant by tool magazine in CNC machine? (AU may 2012)

It is used for storing the different tools in automatic tool changer. They are of two types as drum type and chain type magazine which can store 60 or more tools.

5. What is the function of subroutine in NC part programming? (May 2012)

- To perform at many different position on the workpiece
- To perform a specific repetitive machining task

6. **What are the types of motion control system used in NC machines?(Nov 10)**
   - Point to point or positional system
   - Straight line or paraxial system
   - Continuous path system

7. **What is meant by APT language? (AU nov 2010)**

   It is the abbreviation of automatically programmed tools. APT program is used to command the cutting tool through its sequence of machining process. APT is also used to calculate the cutter positions. APT is a three dimensional system controlling up to five axes including rotational coordinates.

8. **State the limitations of CNC machine tool. (AU apr 2010)**
   - CNC machines are more expensive than manually operated machines, although costs are slowly coming down.
   - The CNC machine operator only needs basic training and skills, enough to supervise several machines. In years gone by, engineers needed years of training to operate centre lathes, milling machines and other manually operated machines. This means many of the old skills are been lost.

9. **What is a preparatory function? How is it important in CNC programming? (AU apr 2011, nov 2009)**

   Preparatory commands which prepare the machine or tool for different modes of movement like positioning contouring , thread cutting and also proceed the dimension word .They are grouped .Group cannot affect each other. Only one function from the same group can be at the same time.

10. **With reference to CNC manual part programming what is linear interpolation. (AU nov 2012)**

    A G01 linear interpolation code moves the tool to a position with coordinates defined with program words in a straight, including angular line at the specified with F-code feed rate. The command is modal and is active until either a G00, or G02, or G03 overrides it.

11. **What is a canned cycle? (AU may 2014) (AU apr2010)**

    Canned cycle is a combination of machine moves that performs anyone particular machining function such as drilling, turning, milling, boring etc.

12. **State the differences between CNC & DNC. (AU nov 2013)**

    In CNC a single computer is used to control a machine. But in DNC a number of machines are controlled by a central computer through a direct connection of telecommunication lines and in real time.

13. Define NC. state their advantages. (AU nov 2013) (AU nov 2014)

Controlling a machine tool by means of a prepared program is known as Numerical control or NC.

Advantages:

1.Higher precision:

NC machine tools are capable of machining at very close tolerances, in some operations as small as 0.005 mm.

2. Machining of complex three-dimensional shapes:

This is discussed in Section 6.2 in connection with the problem of milling of complex shapes.

14. Name the major elements of NC machines. (AU may 2014)

- Tape reader
- Mini computer
- Servos and interface logic
- Motion feedback

15. What is the difference between incremental and absolute system. (Dec 2008)

Absolute programming

In absolute programming the distance at my point at any instant will be measured from the origin (X=0, Y =0)

Incremental programming

Whereas in incremental programming, the instant point will be noted as (X =0, Y = 0) .Further measurement will be made from the particular point only.

16. Mention the advantages of stepping motor. (AU may 2013)

1. Stepper motors offer precise rotation control.
2. They exhibit excellent positional control.
3. These are directly compatible with digital control technique.

17. Name the various elements of CNC machines?

1. Tape reader
2. Mini computer
3. servos and interface logic
4. Motion feedback

18. Write down the types of statements in APT language?

1. Geometric statements
2. Motion statements
3. Postprocessor statement
4. Special control or Auxiliary statements

19. What is meant by micromachining?

Micromachining is the basic technology for fabrication of micro-components of size in the range of 1 to 500 micrometers. Their need arises from miniaturization of various devices in science and engineering, calling for ultra-precision manufacturing and micro-fabrication.

20. What are the types of micromachining?

- Bulk Micromachining
- Surface Micromachining

21. What is meant by wafer machining?

- **The Silicon Crystal is Sliced by Using a Diamond-Tipped Saw into Thin Wafers**
- **Sorted by Thickness**
- **Damaged Wafers Removed During Lapping**
- **Etch Wafers in Chemical to Remove any Remaining Crystal Damage**
- **Polishing Smoothes Uneven Surface Left by Sawing Process**

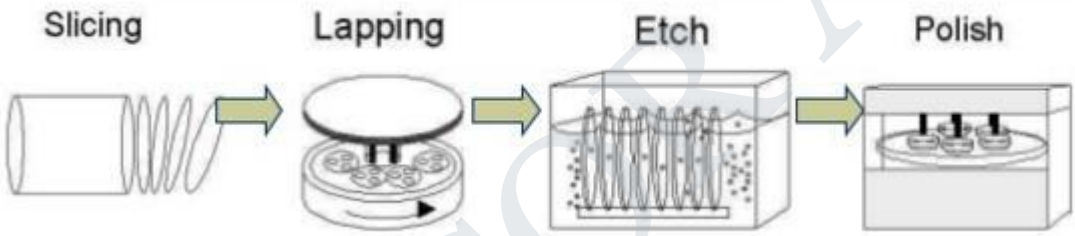

Department of Mechanical Engineering

Important questions for university exam

ME8451 Manufacturing Technology II

Unit - 1

1. Explain the nomenclature of single point cutting Tools.

Single Point Cutting Tool:

- Body having teeth or cutting edges
- It is simplest form of cutting tool & it has only one cutting edge
- Both material and geometry of the cutting tools -effectiveness, efficiency and overall economy of machining
- .eg. – shear tools, lathe tools etc

Parts of the single point cutting tool

1. Shank : - body of the tool
2. Face : - surface – chip slides
3. Flank : - surface of the tool- facing the work piece
4. Base : - bottom surface of the shank, - flat
5. Nose : - junction of sides and end cutting edges
6. Cutting edge: - junction of face and flank
   - End cutting edge
   - side cutting edge

Three Views of Cutting Tools:

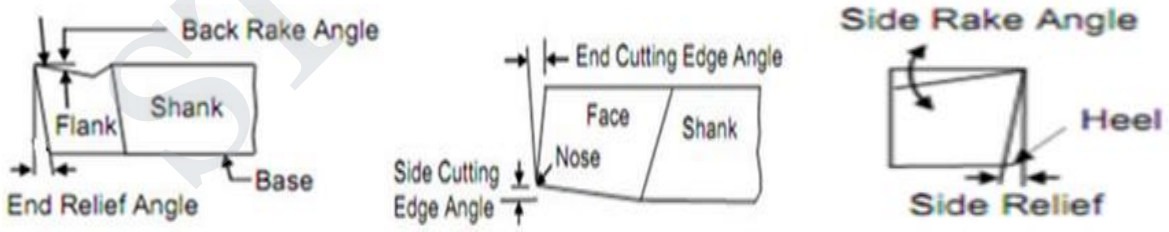

ANGLES IN SINGLE POINT CUTTING TOOL

Rake Angle:

Top Rake Angle (Back Rake angle)

- Angle b/w faces of the tool and line parallel to the base of the tool
- Slope given to the face

Effects

- if material is softer, greater angles needed
- higher the rake angle, weakens the cutting edge

Side Rake angle

- Angle between tool face and line parallel to base of the tool
- When angle is positive slope is given toward the cutting edge

Relief Angle:

Side Relief angle:

- Angle b/w side flank and line perpendicular to base of tool
- If angle is large, cutting edge will break- lack of support
- If angle is small, tool cannot be fed into job- rubbing- overheating- affect surface finish

End Relief angle

- Angle b/w end flank and line perpendicular to the base of the tool
- Prevent rubbing against the job
- If very large – insufficient support
- If small – rubbing

Cutting Edge Angles

Side Cutting Edge angle:

- angle between side cutting edge and side of the tool shank
- controls the chip flow
- Distributing the cutting force.

End Cutting Edge:

- angle between end cutting edge and line perpendicular to the tool shank
- allow small section to contact

Nose Radius

- Angle between side cutting edge and end cutting edge
- Small radius – good practice – increased tool life- good finish
- Large radius – strengthen the tool – hard materials

2. What is meant by tool wear. Explain different types of tool wear?

Tool wear:

- During machining process, the tool is subjected to 3 important factors such as forces , temperature , and sliding action due to relative motion between tool and work piece.
- Because of these factors the tool will be giving unsatisfactory performance after sometimes.
- The unsatisfactory performance result in tool wear due to its continuous use.
- Therefore the tool requires a periodic reconditioning or replacement.

Forms of tool wear:

1. **Attrition**
2. **Diffusion**

1. Attrition:

- In low cutting speed the flow of metals from cutting edge is irregular and less streamlined.
- Sometimes , the built up edges may be formed but the contact will be continuous.
- In this situation the tool will start to tear from tool surface, it is called attrition.
- It could be minimized by increasing the cutting speed or using carbide tips
- As cutting edges ,where the built up edge formed.

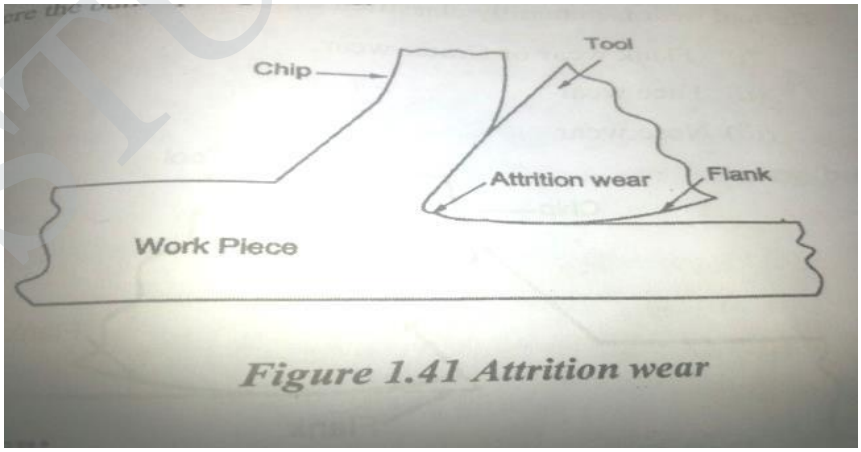

Figure 1.41 Attrition wear

2. Diffusion:

- Diffusion wear happens due to the diffusion of metal and carbon atoms from the tool surface into the work material chip.
- It is also due to high temperature and pressure existing at the contact surface in the metal cutting and rapid flow of chip .
- It mainly depend on the metallaurgical properties of the tool and work.

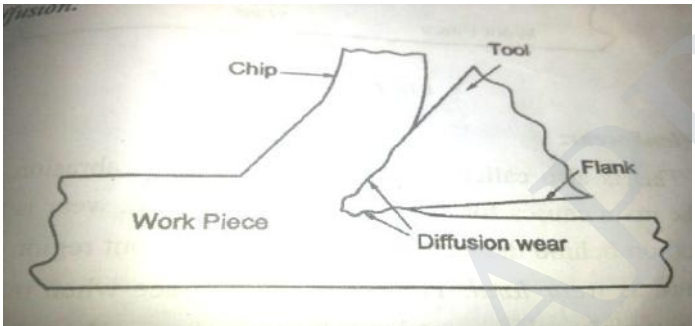

Figure 1.42 Diffusion wear

Classification Of Tool Wear

The tool wear is generally classified as :

1. Flank wear or crater wear.
2. Face wear
3. Nose wear

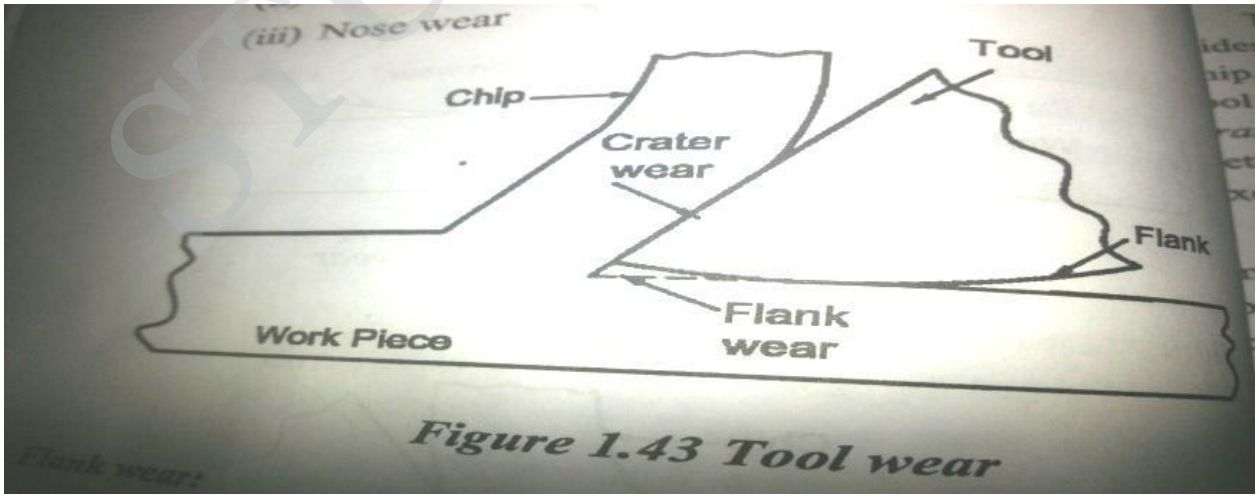

Figure 1.43 Tool wear

1. Flank wear

- "edge wear".
- Causes - Friction, abstraction, adhesion
- flat worn out portion behind the cutting edge- **wear land.**
- machining the brittle materials such as cast iron
- when the feed is less than 15mm/revolution.
- When the wear land increase , the friction heat will cause excessive temperature of the tool at the cutting edge thereby decreasing its hardness of rapidly
- Flank wear result a rough machining surface.

2. Crater Wear

- chip slides over the face of the tool .
- Due to the pressure of the sliding chip, the tool gradually wears out.
- Because of this a cavity is formed on the tool face -**CRATER**
- when the cratering is excessive the cutting edge may break from the tool.
- Cratering is commonly occurs while machining a ductile material which produces continuous chips.
- The tool life to crater wear can be determined by fixing the ratio of width of crater to its depth.

3. Nose Wear

- It is similar to flank wear in certain operations. The wear occurs in the nose radius of the tool.
- When the nose of the tool is rough, abrasions and frictions between tool and work piece will be in high.
- Due to this wear more heat will be generated. Also more cutting force will act on the tool. This type of wear is more prominent than flank wear.

3. What is meant by Tool Life? Explain the various factors affecting the tool life?

Tool Life:

Tool life is defined as the cutting time required for reaching a tool life criterion or time elapsed between two consecutive tool resharpenings. During this period, the tool serves effectively and efficiently. The tool life is an important factor in a cutting tool performance.

Ways of expressing tool life

1. Volume of metal removed per grind.
2. Number of work piece machined per grind.
3. Time unit

Factors affecting tool life

1. Cutting speed
2. Feed and depth of cut
3. Tool geometry
4. Tool material
5. Cutting fluid
6. Work material
7. Rigidity of work, tool and machine.

1. Cutting Speed:

- Cutting speed has greater influence on the tool life.
- When the cutting speed increase the cutting temperature also increase. Due to this hardness of the tool decrease.
- Hence the tool flank wears leads to occurrence of crater wear.
- when the cutting speed increases the tool life decreases.
- The tool life will be increased at low speed.
- There is a definite relationship between the cutting speed and tool life .

This relationship is given by 'TAYLOR'S FORMULA.

$$VT^N=C$$

Where V = cutting speed in m/min.

T = tool life in minutes.

N = exponent o index.

C = numerical constant which is equal to cutting speed which gives tool life of one minute.

Roughness of the tool cutting edge result in concentration of stress which maycause surface cracks and chipping tool.

Factors influencing the cutting speed

1. Tool life
2. Properties of materials being meachined
3. Rate of feed of depth of cut
4. Tool geometry
5. Cutting fluid used
6. Type of machining process
7. Surface finish to be obtained

2. Feed And Depth Of Cut

The life of cutting tool is influenced by the amount of metal removed by the tool per minute. When the fine feed is used the area of the chip passing over the tool face is greater than a course feed for a given volume of metal removed.

formula

$$V = \frac{257}{T^{0.19} \times f^{0.36} \times t^{0.08}} \text{ in } m/min$$

where

V - Cutting speed

T - Tool life

f - Feed in mm/min

t - Depth of cut in mm

3. Tool Geometry

- Large rake angle reduces the tool cross section . hence the amount of heat absorbed by the tool is also reduced.
- It weakens the tool. So the correct rake angle must be used for long tool life. The optimum rake angle must be used for long tool life.
- The optimum rake angle for maximum tool life lies between -5 degree to +10 degree for turning austenitic steel by a carbide tool.
- But more relief angle decreases the tool life because of decreased strength. The optimum relief angle is 12 degree to 15 degree.
- The optimum side cutting angle lies between 30 degree to 25 degree. Increase in nose radius improves the tool life since the stress concentration is lesser for greater nose radius.
- The proper cutting edge angle is provided to improve surface finish, rigidity, and equivalent cutting speed.

4. Tool Material

- An idea of material is one which removes maximum volume of material at all cutting speed.
- Both physical and chemical properties of tool material influence on tool life.
- For a given cutting speed HSS the tool is more durable than carbon steel tool. But carbide tool have more life than HSS.

5. Cutting Fluid:

- Heat produced during metal cutting is carried away by tool and by means of cutting fluid.
- It reduces the friction at chip tool interface and increase tool life.

The cutting fluid which directly controls the amount of heat at the chip tool interface is given by the formula.

$$T\text{Ø}^N = C$$

T= tool life

Ø=temperature of chip tool interface in degree

N = an index which depend on shape and material of the cutting tool

6. Work piece material and rigidity of work tool and machine:

- micro structure of the work piece material .
- tool life will be more when machining soft material than hard material such cast iron and alloy steel
- A stronger supported tool on a rigid machine will have more life than tool machining under vibrating machine.
- loose work piece will decrease the tool life.

4. Explain about Orthogonal and Oblique cutting.

Orthogonal Cutting

In orthogonal cutting, the tool approaches the workpiece with its cutting edge parallel to the uncut surface and at right angles to the direction of cutting. Thus tool approach angle and cutting edge inclination are Zero. This type of cutting is also known as Two-dimensional Cutting.

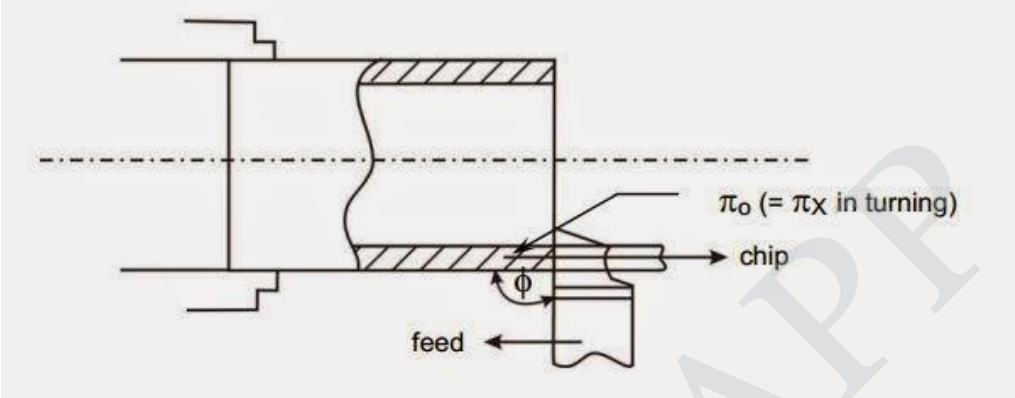

Orthogonal Cutting assumptions

1. The tool is perfectly sharp and there is no contact along the clearance face.
2. The Cutting edge of the tool remains normal to the direction of tool feed or work feed.
3. The direction of the chip flow velocity is normal to the cutting edge of the tool.
4. The cutting edge is a straight line, extending perpendicular to the direction of motion and generates a plane surface as the work moves past it.
5. The chip does not flow to either side.
6. The depth of cut is constant.
7. Width of the tool is greater than that of workpiece
8. The work moves relative to the tool with uniform velocity.
9. A continuous chip is produced with no built-up edge.

Oblique Cutting

In oblique cutting , the cutting edge of the tool is inclined at an acute angle with the direction of tool feed or work feed, the chip begin disposed of at a certain angle. This type of cutting is also called Three-dimensional cutting.

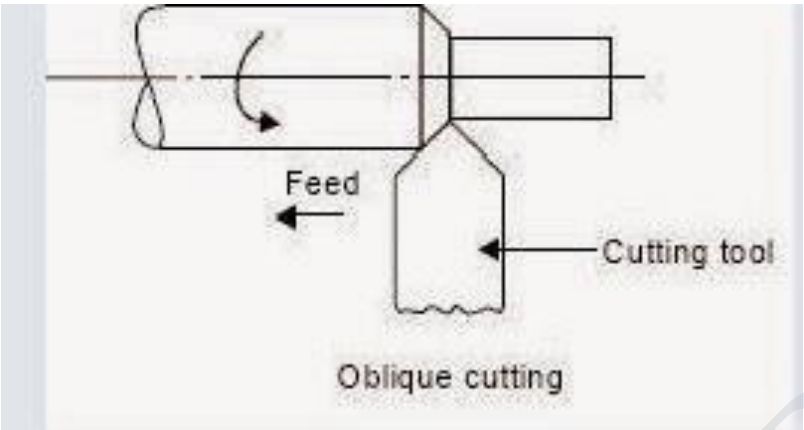

Oblique cutting assumptions

1. The cutting edge of the tool always remains inclined at an acute angle to the direction of tool feed or work feed
2. The direction of the chip flow velocity is at an angle 'β' with the normal to the cutting edge of the tool. The angle is known as Chip flow Angle.
3. The cutting edge of the tool is inclined at an angle 'i' with the normal to the direction of work feed or tool feed i.e., the velocity Vc
4. Three mutually perpendicular components of Cutting Forces act at the cutting edge of the tool.
5. The cutting edge may or may not be longer than the width of the cut.

5. What is meant by cutting Fluids? Describe its tpes and method of applying it.

Cutting Fluids:

- During metal cutting ,heat is generation-friction
- Hence the hardness of the tool decreases
- It is used to carry away the heat produced
- Applied at chip formation zone

Function of cutting fluid:

- Cutting fluid cools the cutting tool &work piece
- Lubricates the cutting fluid to reduce the friction
- It improves the surface finish
- Washes away the chips
- Prevents the corrosion of work piece

Properties of cutting fluid:

- Good lubricating properties
- High heat absorbing capacity
- High flash point
- Odorless
- Non corrosive
- Low viscosity
- Harmless to operate
- Transparent
- Economical

Types of cutting fluids

- Water based cutting fluids
- Heat oil based cutting fluids

1 .Water based cutting fluids:

- To improve the cooling and lubricating properties of water
- Water with soap or mineral oil

E g: water and soda solution

2. Heat oil based cutting fluids:

- Undiluted or pure oil based fluid
- Oil added with sulphur and chlorine

Mineral oil:

- Oils, kerosene
- It is used for light machining operation -

Straight fatty oil:

- Oil consist of animal, fish and vegetable oils
- Olive oil, cotton seed oil
- It is used during thread cutting operation

Compound oils:

- Excellent lubricating and cooling properties
- It is used for automatic screw machine

Sulphurised oils:

- Good lubricating and cooling quality
- It is used for heavy-duty lathe

Chlorinated oils:

- Anti weld characteristics
- It is used for cutting operation

Methods of applying cutting fluids:

1. Drop by drop under gravity
2. Flood under gravity
3. Form of liquid jet
4. Atomised from with compressed air
5. Centrifugal action

6. Explain about cutting tool materials.

Cutting tool materials:

- The various materials are used to remove the metal from work piece
- The tool must be harder than the material

Selection of cutting tool materials:

1. Volume of production
2. Tool design
3. Type of machining
4. Physical and chemical properties of w/p
5. Rigidity

Properties of cutting tool materials:

1. Hot Hardness:

- With stand high temperature without loosing its cutting edge
- Maintain its hardness-high temp

Materials: chromium, molybdenum , tungsten and vanadium

2. Wear resistance:

- Resist wear
- Poor surface finish

Materials: cobalt

3. Toughness:

- Combination of strength and ductility
- Withstand shocks and vibrations
- Limits the hardness

Materials: molybdenum and nickel

4. Low friction:

- The coefficient of friction between tool and w/p
- Reduce friction, heat developed and tool wear

5. Cost of tool:

- Economical in production

6. High thermal conductivity

7. Resistance to thermal shock

8. Easy to grind and sharp

9. Low mechanical and chemical affinity for the work material

Classsification of Tool Materials:

1. Carbon Tool Stell
2. High Speed steel
3. Cemented carbides
4. Ceramics
5. Diamonds

1. Carbon Tool Steels:

Compositions:

- Carbon - 0.8 to 1.3 %
- Silicon - 0.1 to 0.4 %
- **Manganese – 0.1 to 0.4 %**

Properties:

- Low cutting speed
- Temp. below 200 degree
- Good hardness, strength and toughness
- Lost hardness at 350 degree

Applications:

- Taps, dies, reamers, hacksaw blades

Ingredients: Tungsten, molybdenum, chromium and vanadium

2. High Speed Steels(HSS):

- Cuts the metal at high speeds
- Hot hardness and high wear resistance
- Cutting speed – 2 to 3 times higher than carbon steels
- Improved cutting performances and higher MRR
- Hardness upto 900 degree

Applications:

- drills, milling cutters, broaches, taps, turning tool and dies

HSS: 18-4-1

- 18% tungsten, 4% chromium and 1% vanadium

Types of HSS:

1. Molybdenum HSS:

- 6% molybdenum, 5% tungsten, 4% chromium and 2% vanadium
- high toughness

2. Cobalt HSS:

- super HSS
- cobalt 12%, tungsten 20%, chromium 4% and vanadium 2%
- planer tools, milling cutters, rough cutting tools etc..

3. Cemented carbides:

- Mixing tungsten powder and carbon at high temp. 1500 degree
- Ratio 94:6 by weight – tungsten carbide
- Tungsten carbide with cobalt – sintered in furnace at 1400 degree – 82% tungsten carbide, 10% titanium carbide and 8% cobalt
- Used as a insert – withstand upto 1000 degree
- 6 times higher than HSS

Types:

1. Straight tungsten carbides
2. Alloyed tungsten carbides

4. Ceramics

- Aluminium oxide and boron nitride powders – sintered- 1700 degree
- High compressive strength
- Upto 1700 degree
- High cutting speed

5.Diamonds

- Hardest cutting materials
- PCD – Ploy Crystalline diamond – sintered under high pressure and temp.
- Low coefficient of friction, high compressive strength and wear resistant
- Machining hard materials – glass, plastics and ceramics..etc
- Good surface finish
- Upto 1250 degree
- Tool life – 50 to 100 times more than cemented carbides

6. Cubic Boron Nitride

- Boron nitride – equal number of boron and nitrogen atoms
- Hardness less than diamond

7. Write about mechanism of chip formation and types of chips.

Mechanism of chip formation:

- relative motion between tool and workpiece.
- Contact between tool and workpiece.
- Force will be exerted over the workpiece(Compressive force).
- Stress-Material exceeds it's yield point.
- Material reaches plastic region.
- Causes-Shearoff-Material removed.
- Chip flow over the tool.
- Compressive forces-cutting force.
- Chip flow over the tool - Wearoff.
- Friction- Wearheat.
- Heat generated-Soften the material tends to failure.

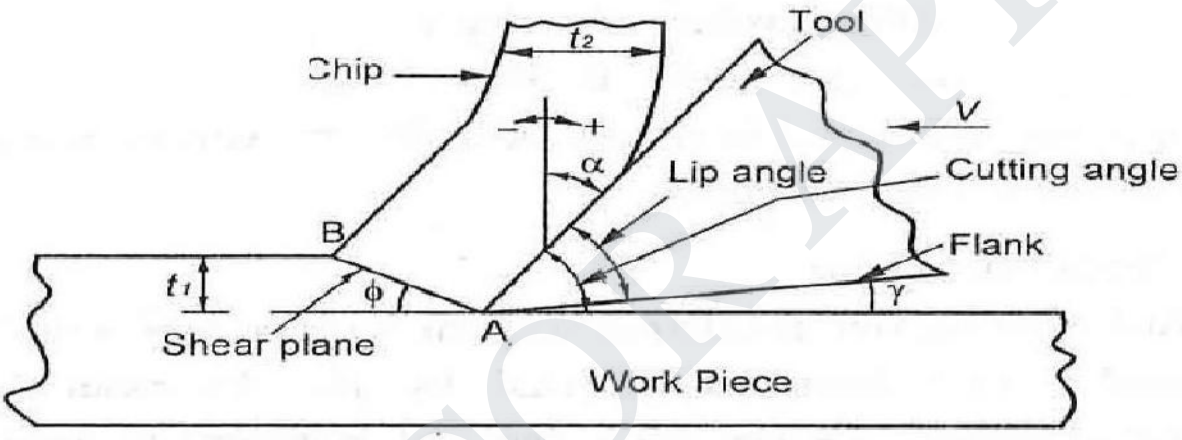

Features:

-Cutting force, abrassive wear, heat should be reduced.

Properties Of Workpiece:

- Hardness.
- Abrassive qualities.
- Toughness-Shocks and vibrations.
- Tendency to weld.
- Inherant hotspot.

Properties Of Tool:

- Hardness.
- Toughness.
- Wear resistance.

Variable For Type Of Chips:

- Mechanical property of workpiece(Ductile,Brittle).
- Depth of cut.
- Various angle of tool.

- Cutting speed.
- Feed rate.
- Cutting fluid.
- Machine temperature.
- Surface finish required.
- Friction between tool and workpiece.

Types Of Chips:

1. Continuous chips.
2. Discontinuous chips.
3. Continuous chips with build up edges.

CONTINUOUS CHIPS:

- Long chain.
- Same thickness through out the lenght.
- Ductile material(Low carbon steel).

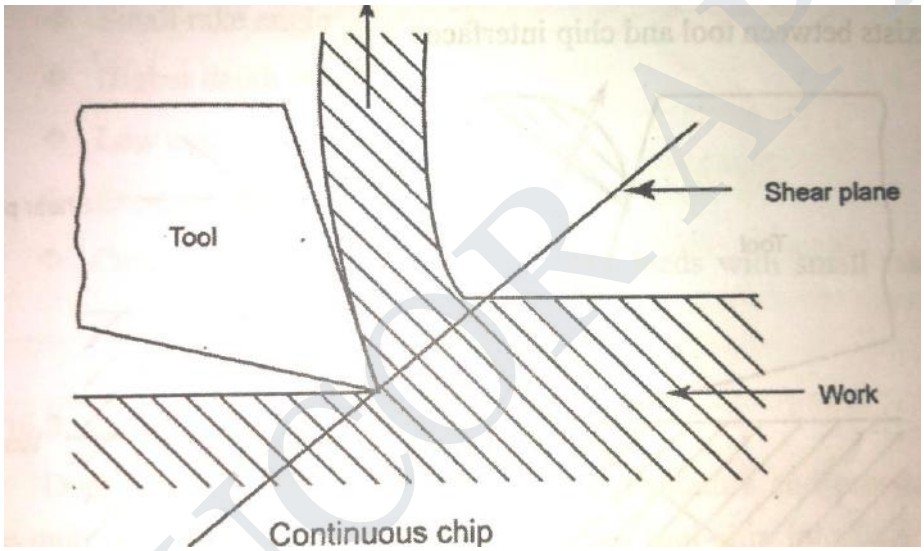

Advantages:

- Good surface finish.
- Improved tool life. **Disadvantage:** - Chip disposal is not easy.
- Damages the finished areas.

Conditions:

- Ductile materials (Low carbon steel). - Small depth of cut.
- High cutting speed. - Large rake angle.
- Sharp cutting angle. - Proper cutting fluid. - Low friction.

DISCONTINUOUS CHIPS:

- Segmental chip.
- Lack of ductility-Less plastic region.
- Rupture of chips.
- Brittle material(High carbon steel,Cast iron).

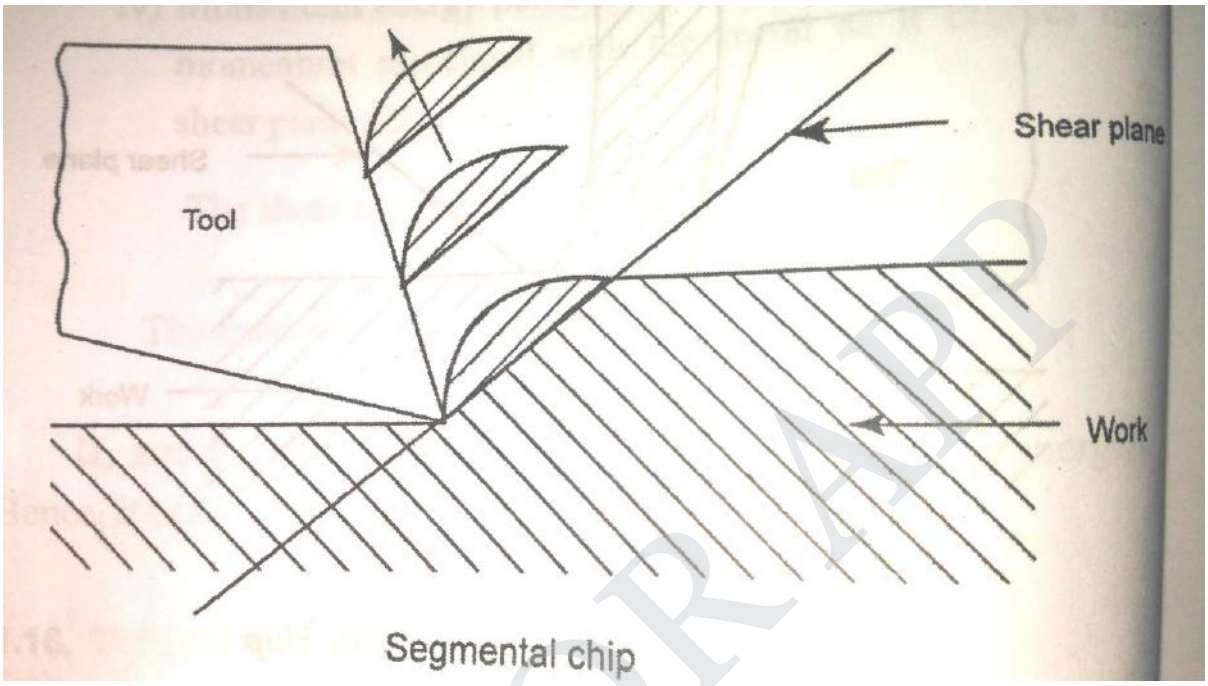

Advantages:

- Easy disposal.
- Will not affect finished area.

Disadvantages:

- Low tool life. **Condition:** - Brittle material.
- Small rake angle.
- Low cutting speed.
- Excess cutting fluid. - Very low feed.

CONTINUOUS CHIPS WITH BUILD UP EDGES:

- Interface temperture.
- Pressure are quite high.
- High friction between tool chip interface.

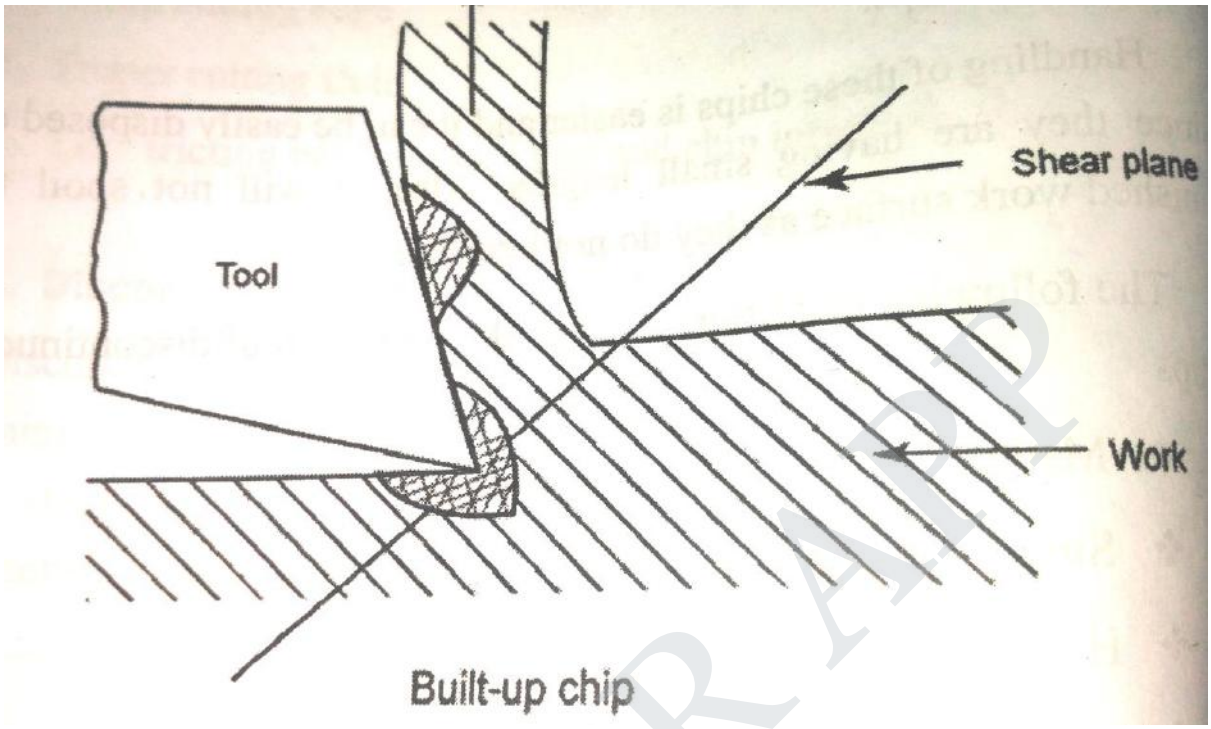

Advantages:

- Transient and non-stable phenomenon.
- Increase of tool life.

Disadvantages:

- Poor surface finish.
- Accelerated wear on tool face.

Conditions:

- Low cutting speed.
- Small rake angle.
- Coarse feed.
- Strong adhesion between chips and tool interface.
- Insufficient cutting fluid.
- Large uncut thickness.

Department of Mechanical Engineering

Important questions for university exam

ME8451 Manufacturing Technology II

UNIT - 2

1. What is meant by Semi-automatic Lathe? Explain the working principle of Capstan and Turret Lathes. Write its advantages and disadvantages?

Semi-Automatic Lathe

The change of center lathe into some special lathe is called as semi automatic lathe.

- More than one tool used.
- Eg. Capstan and turret lathes are called semi automatic lathe.
- Same working but different applications

Main Components of Capstan and Turret Lathe

1. Bed
2. Head stock
3. Turret head and saddle
4. Cross slide

Construction

1. Bed:

-Base part
-Cast iron
-Mount on guide way
-Withstand heavy loads and vibrations

2. Head Stock:

- Step cone pulley driven
-Direct electric motor driven
-All geared
-Pre selective stock

3. Turret head and saddle:

-Mount on ram
-Clamped well
-Hexagonal block
-Six faces
-Each tool indexed 60°

-Working under geneva mechanism
-Tool post move perpendicular

4. Cross Slide:

-Mount on guide ways
-Each tool indexed 90°
-Tool post move perpendicular and parallel direction.
-Power feed is used for movement of tool.
-It's supported on the front ways.

Working Principle:

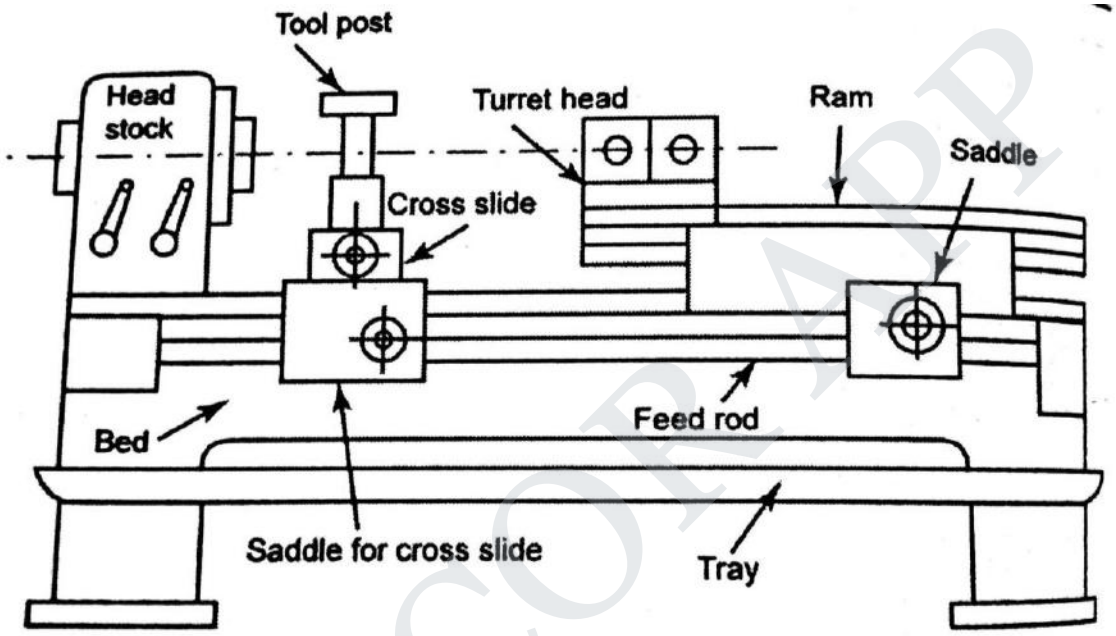

Figure 2.57 Capstan and Turret lathe

Indexing Mechanism

- Geneva Mechanism
- Turret automatic indexing mechanism
- Ram return starting position.
- Next tool comes into position to perform machining operation.
- Lock index plate.
- Index plate is free to rotate.
- When turret moves forward the plunger is again locked.
- it rotates 1/6 or 60° revolution.

Working of Indexing:

-Work piece held in collets or chuck.
-Bar feeding mechanism is used.
-Atleast 6 tool can need on hexagonal turret faces.
-4 tool is front square tool post.
-Generally, drilling,boring,reaming,counter bouring,turning and threading tools on hexagonal turret head.
-Forming,knurling are on square turret head.
-It control by preset stop.
-The work piece is tightly gripped by collet.
-Hexagonal move in forward direction.
-After machining turret move in backward and adjustable stop.

Diagram:

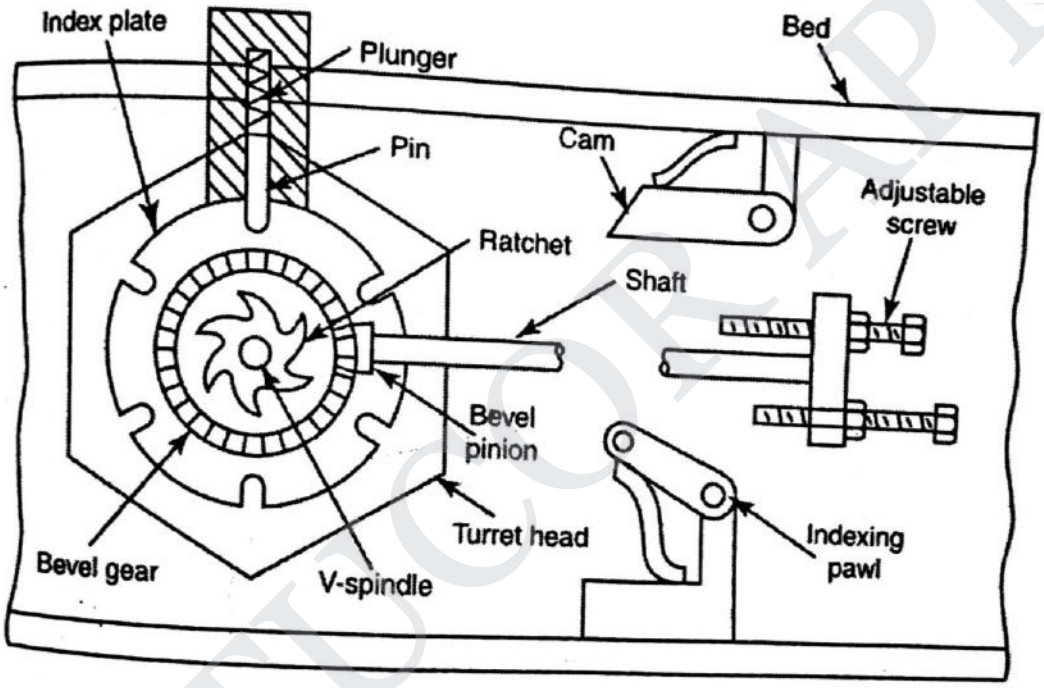

Figure 2.60 Geneva mechanism or Indexing mechanism

Advantages:

-Production rate high.
-Large number tool can held.
-Perform more than one operation.
-More rigid.
-Labour cost is less.

2. Describe the constructional features of Swiss type automatic screw machine

Automatic lathe:

- All operation and job handling movement-automatically
- Speed changing,feed changing and toolchanging automatically
- Operation:identical parts

Swiss type automatic lathe:

- Sliding head automatic lathe

Principle:

Feed movement in the longitudinal direction

Main parts:

1. Sliding head stoke
2. Cam shaft
3. Tool bracket
4. Feed base

Constructional features:

1.**Sliding head stoke:**

- This headstoke has a collet
- The head stoke slides along the guide ways of the bed

2.Tool Bracket:

- Tool bracket is mounted on the bed
- The tool bracket supports the 4or 5 tool slides
- These slides are independently actuated by sets of rocker arms and plate cams

3.Feed Base:

- It is mounted at the right hand side of the hed stoke
- It can move along the bed
- Using attachement operation such as drilling,boring,threat cutting etc.

4.Cam Shaft:

- Cam shaft is mounted at the front of the machine
- It controls the sliding movement of the head stock

Working principle:

- The bar stoke is held-rotating spindle-collet chuck
- the head stock movement gives a longitudinal feed to the work
- all tools in the tool slide remove material from the workpiece at the same time
- after the workpiece finish the headstoke slides back to the original position
- one revolution of camshaft produced the one components

Diagram:

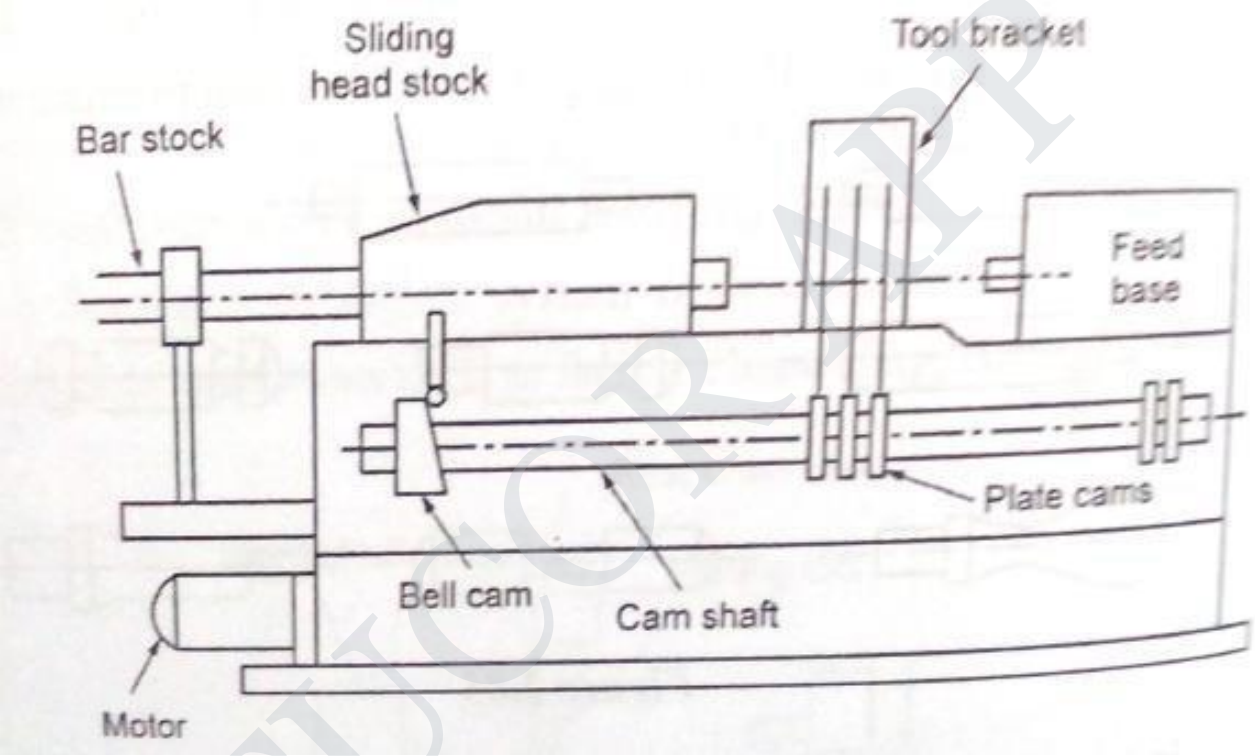

Advantages:

- it is used to the manufacture industry
- it has five tool slides
- micrometer tool setting is possible
- wide range of speed is available
- inter changeability of cams is possible

3. Explain about parallel and progressive action multispindle automatics. Write the procedure of tool layout for automatic screw machine

Multiple spindle automatic lathe:

- A tool slides working simultaneously on the jobs on all spindles
- A number of workpiece are machined at the time

Principle of operation:

1. Parallel action type
2. Progressive action type

Parallel action type:

- It is also called as multiple-flow machine

Principle of parallel action type:

- The same operation is performance on each spindle
- In one cycle the number of components produced simultaneouslyis equal to the number of spindle

Main parts:

1. Frame with a head stoke
2. Two cross slide
3. Front tool slide
4. Rear tool slide
5. Work spindle

Diagram:

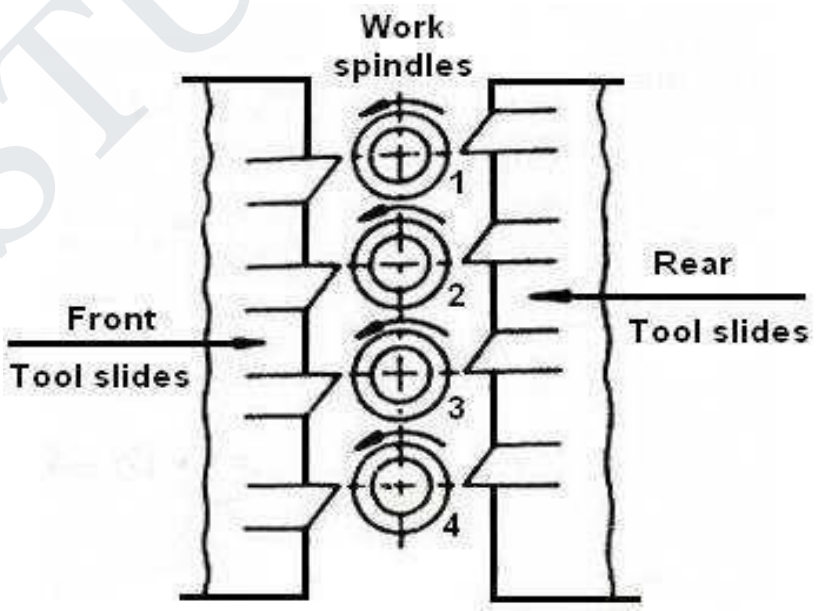

Working principle:

- The consists of frame with a head stoke
- They are the two cross slides
- The left hand slide cross slide is front tool slide
- The right hand slide cross slide is rear tool slide
- In this type of machine the same operation is performed on each spindle
- In one working cycle each workpiece is finished in each spindle
- Five spindle machine five components can be complete at a time

Advantages:

- The rate of production is very high
- If anything goes wrong in one station the production in that particular station only is affected

Disadvantages:

- Small parts of simple shapes are produced

Progressive action multispindle automats:

- It is also called as cutting off machine

Principle:

- Different operation are done on jobs at each station one after another
- The number of components produced in one cycle is not equal to the number of spindle

Main parts:

1. Six spindle
2. Head stoke
3. Spindle carrier
4. Tool slide
5. Bar stoke

Diagram:

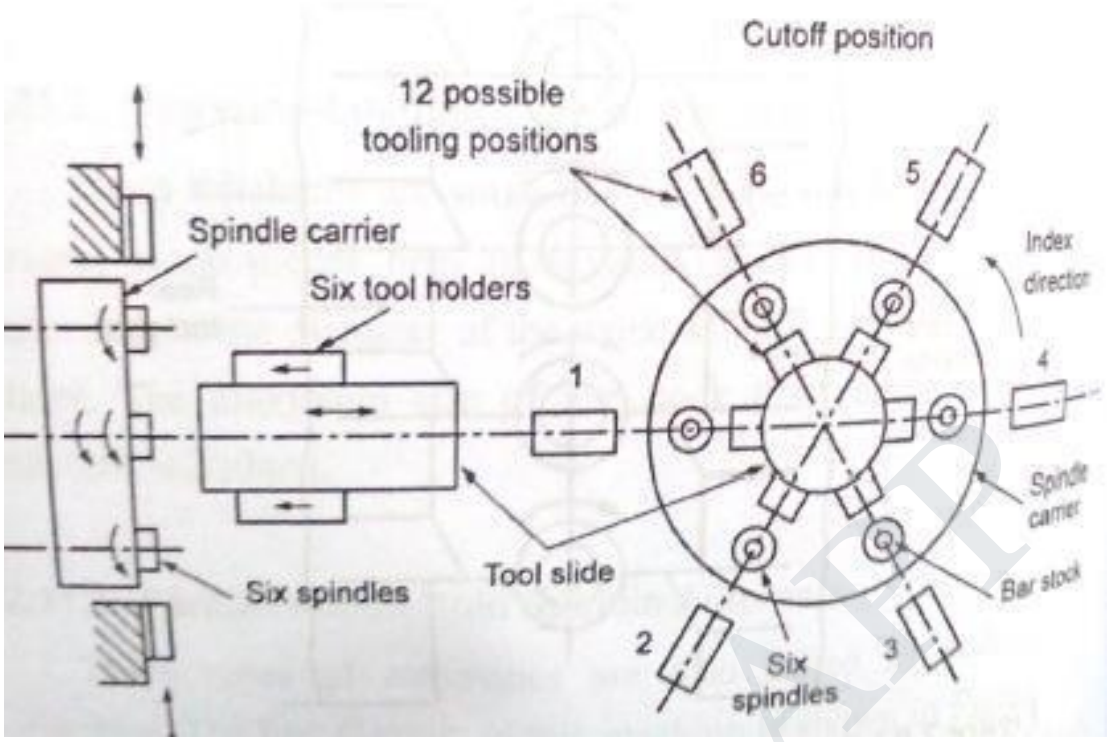

Working principle:

- A six spindle progressive action multi spindle automatic lathe
- The head stoke is mounted on the base of the machine
- The workpiece are held in the collet in the spindles
- The cross slide travel radially inward for cutting operation
- It carries tool slides around its periphery
- One tool slide corresponding to each spindle
- It carries the work from station to station
- In every station various type of operation
- In sixth station the components completed and cut off

Advantages:

- Parts of complicated shapes can be produced

Disadvantages:

- The rate of production is moderate
- If anything goes wrong in one station the production is completely affected in all station

4. Write about single spindle and multi spindle automatic lathe.

Multi Spindle Lathe:

- A tool slides working simultaneously on the jobs on all spindles
- A number of workpiece are machined at the time

Principle of operation:

1. Parallel action type
2. Progressive action type
3.

Parallel action type:

- It is also called as multiple-flow machine
- Principle of parallel action type:
- The same operation is performance on each spindle
- In one cycle the number of components produced simultaneouslyis equal to the number of spindle

Main parts:

1. Frame with a head stoke
2. Two cross slide
3. Front tool slide
4. Rear tool slide
5. Work spindle

Diagram:

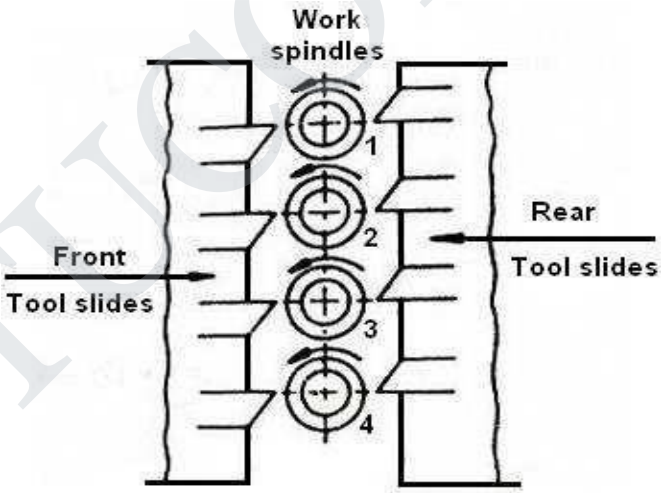

Working principle:

- The consists of frame with a head stoke
- They are the two cross slides
- The left hand slide cross slide is front tool slide
- The right hand slide cross slide is rear tool slide
- In this type of machine the same operation is performed on each spindle
- In one working cycle each workpiece is finished in each spindle
- Five spindle machine five components can be complete at a time

Advantages:

- The rate of production is very high
- If anything goes wrong in one station the production in that particular station only is affected

Disadvantages

- Small parts of simple shapes are produced

Progressive action multispindle automats:

- It is also called as cutting off machine

Principle:

- Different operation are done on jobs at each station one after another
- The number of components produced in one cycle is not equal to the number of spindle

Main parts:

1. Six spindle
2. Head stoke
3. Spindle carrier
4. Tool slide
5. Bar stoke

Diagram:

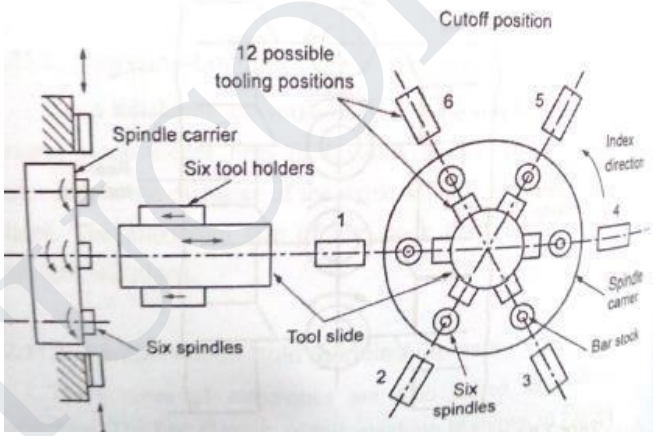

Working principle:

- A six spindle progressive action multi spindle automatic lathe
- The head stoke is mounted on the base of the machine
- The workpiece are held in the collet in the spindles
- The cross slide travel radially inward for cutting operation
- It carries tool slides around its periphery
- One tool slide corresponding to each spindle
- It carries the work from station to station
- In every station various type of operation
- In sixth station the components completed and cut off

Advantages:

- Parts of complicated shapes can be produced

Disadvantages:

- The rate of production is moderate
- If anything goes wrong in one station the production is completely affected in all station

5. Explain the special attachments used in lathe.

Special Attachments:

Milling and grinding can be performed on lathes by using special attachments.

Types of Special Attachments:

1. Milling Attachment
2. Grinding Attachment
3. Turning Attachment

Milling Attachment:

- Process of removing metal by moving work piece against cutter.
- It has multi point cutting edges.
- Two methods of milling profile
  - For cutting grooves or keyways
  - For cutting multiple grooves or gear wheel

Grinding Attachment:

- Process of removing metal in fine form of chips.
- Both external and internal grindings can be cut.

Taper Turning Attachment:

- In taper turning, the Job is held between centers or in a chuck.
- Guide bar indicates the direction of required Angle.
- It has graduations in degree.

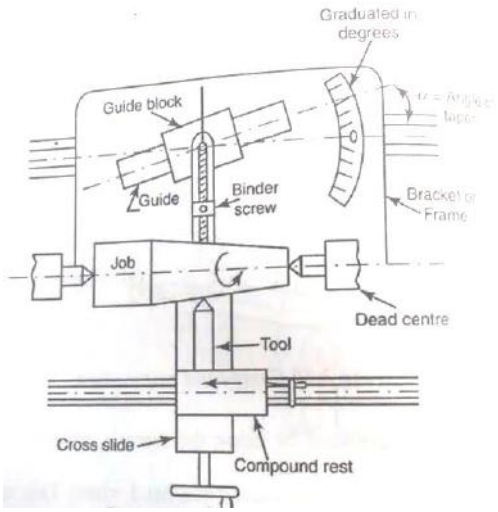

6. Explain the the working principle of Screw cutting machine.

Automatic Screw Cutting Machine

Components:

- Mainly consists of Cross Slide and Turret.
- One slide in front and another one in rear for feeding tools.
- Headstock is Stationary.
- Turret slide have 6 tool holes.

Working:

- The lead cam gives a slow forward and fast return movement of turret slide.
- The disc cam control cross slide.
- Slotting work, milling flats, cross- drilling can be performing.

Diagram:

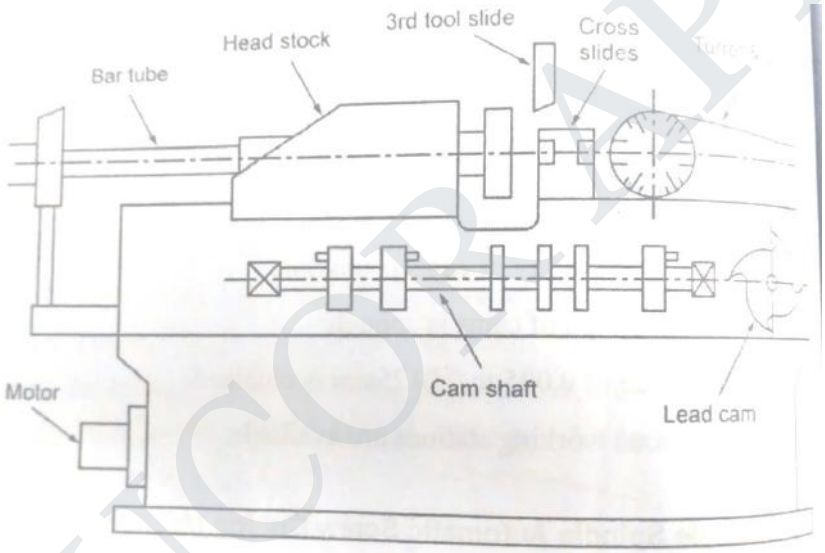

Figure 2.89 Automatic screw cutting machine

Operations:

Turning,
Drilling,
Boring,
Threading,
Spot facing.

Applications:

Production of Small jobs, screws, stepped pins , taper pins , bolts etc..,

7. Explain the various types of work holding devices?

Work Holding Devices:

- Hold the workpieces

List of Work holding devices:

i. Chucks
ii. Centres
iii. Face Plate
iv. Angle plate
v. Mandrels
vi. Steady and follower

i.Chucks:

- Hold the workpiece
- Small length L < 4D

TYPES:

- Three jaw chucks or Self centering chuck
- Four jaw chuck or Independent chuck
- Magnetic chuck

Three Jaw chucks:

- Self centering chuck
- Three jaws
- All jaw moves – equal distance
- Simultaneous move
- Carries circular disc, Three bevel pinions

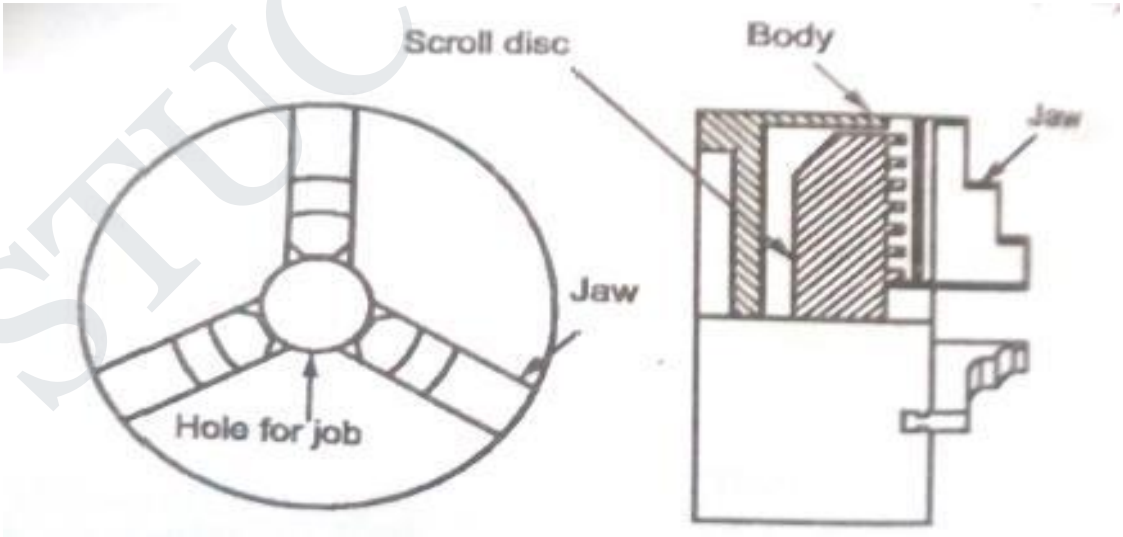

Four Jaw Chucks:

- Independent chuck
- Four jaws
- Each jaw can independently be moved
- Irregular job can be held

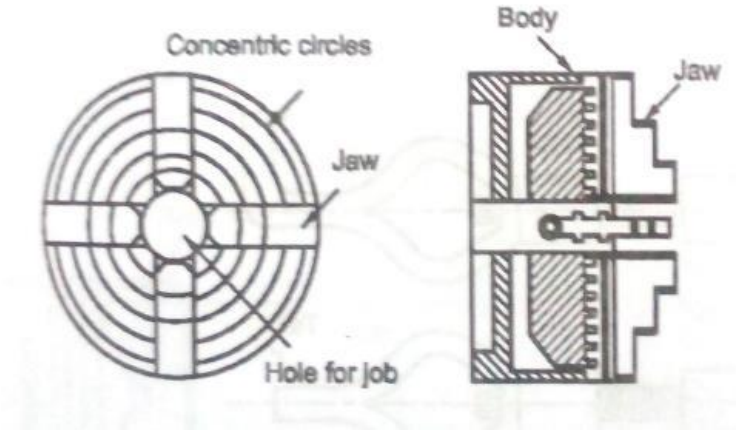

Magnetic Chuck:

- Thin job can be held
- Electro-magnet
- Only magnetic materials can be held

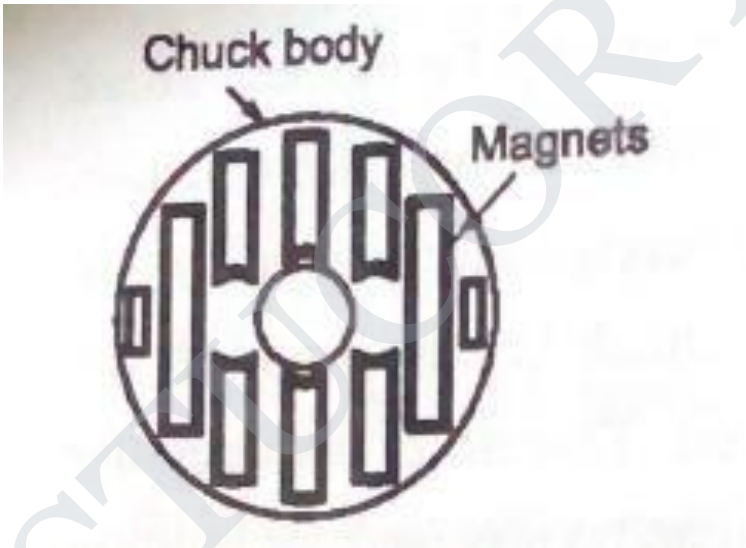

ii.CENTRES

- Hold the long job
- Catch Plate and dog

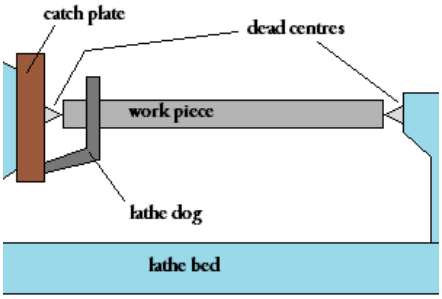

iii.FACEPLATE

- Circular cast iron disc
- Four T-slots, number of plain radial slots
- Hold asymmetrical work

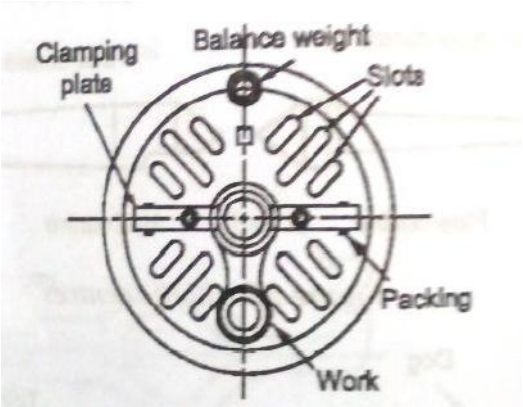

iv.ANGLE PLATE

- One face clamped on faceplate and workpiece is mounted on other face

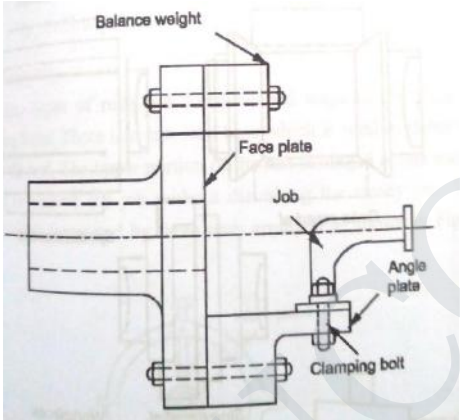

v.MANDRELS

- Hold hollow workpieces

vi.STEADY AND FOLLOWER REST

- Supports long work pieces L/D > 10
- Placed in between headstock and tailstock
- Prevent vibration and bending

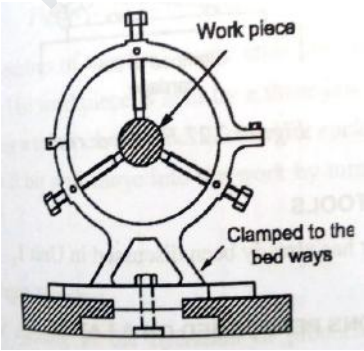

Steady Rest

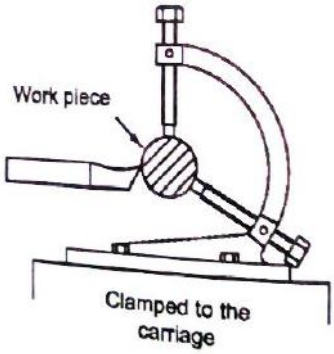

Follower rest

8. Explain the different types of Lathe operations.

LATHE OPERATIONS:

- **Centering**
- **Turning** – Rough, Finish and shoulder
- **Facing**
- **Chamfering** – turning a slope at the end of the w/p
- **Knurling** – diamond shaped pattern on surface
- **Filing** – removing burs, sharp corners
- **Forming** – concave, convex
- **Grooving** – reducing diameter over a narrow surface
- **Parting off** – cutting into two halves
- **Drilling** – hole in w/p
- **Reaming** – finishing and sizing hole
- **Boring** – enlarging the drilled hole
- **Milling** – workpiece feed into the rotating tool
- **Grinding** – fine metal removal
- **Tapping** – internal threading
- **Taper turning**
- **Thread cutting**
- **Eccentric turning**

9. Explain the Thread cutting Methods.

Thread Cutting:

- Producing helical groove on the cylindrical workpiece
- Job rotates and automatically fed in the longitudinal direction using locknut and lead screw
- Longitudinal feed = pitch of the thread to be cut
- Rotation of workpiece and longitudinal feed – desired pitch
- Lead screw and spindle – connected – number of gears – Change gear
- Lead screw is connected to carriage – half nut
- Spindle speed = speed of lead :: Pitch of w/p = Pitch of lead screw
- Vary the pitch = speed of lead screw – varied – proper change gear

Driver teeth/ Driven teeth=Teeth on spindle gear/ Pitch =Teeth on leadscrew/Pitch of lead screw

Diagram:

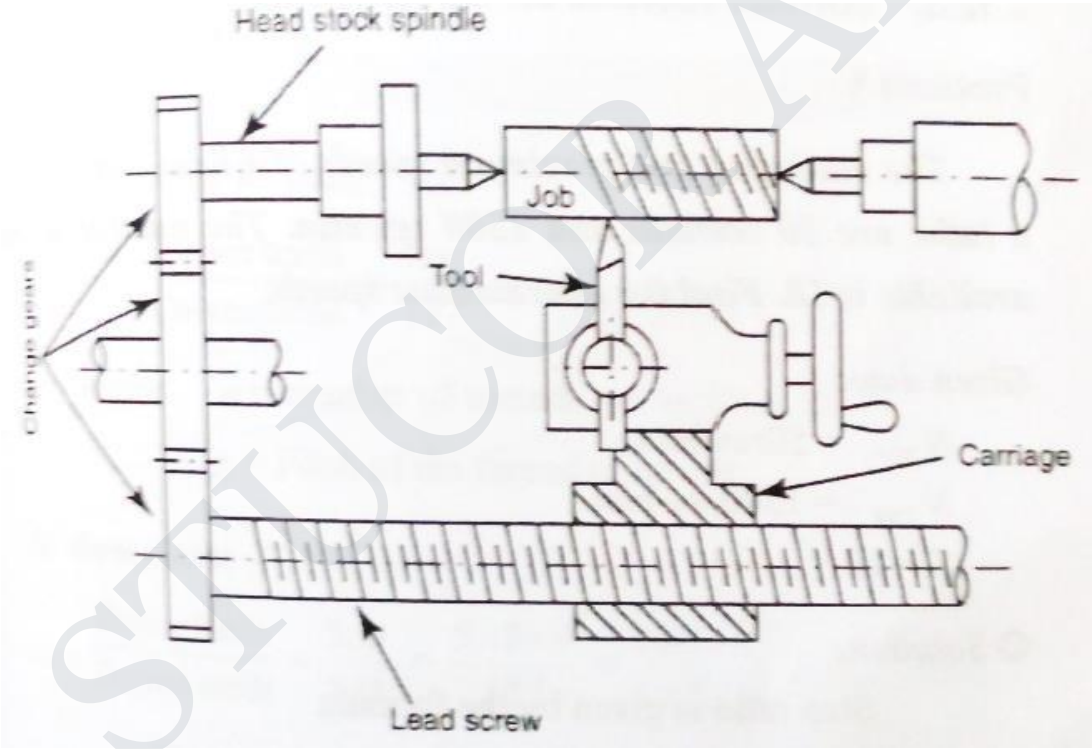

THREAD CUTTING METHODS

1. Reversing the machine
2. Using a chasing dial or thread indicator

Department of Mechanical Engineering

Important questions for university exam

ME8451 Manufacturing Technology II

UNIT - 3

1. i) Explain the working principle of Radial Drilling Machine?
ii) Explain the various operations that can be performed in drilling Machine?

i) Radial Drilling Machine:

The machine on which the drilling is carried out is called driling machine.

-mounted on floor & more suitable for large and heavy workpieces
- significant feature is radial arm which can swing about a column
- Arm can move up and down & can be locked at any desired position

Main Parts:

1. Base
2. Column
3. Radial Arm
4. Drill Head
5. Spindle head and Feed mechanism

Working Priciple:

i. Base:

-large rectangular casting
-supports vertical column & table

ii. Column:

-cylindrical casting mounted on the base
-supports arm, drill head & motor
-column face- slide radial arm up & down
-elevating screw _ motor **iii. Radial**

Arm:

-heavy casting mounted on the column
-drill head _ radial arm
-has guide ways to move drill head

iv. **Drill Head:**

-Drill head –mounted on radial arm
-equipped with separate motor
-moved manually along the arm
-has spindle carries drill bit

v. **Spindle head and feed mechanism:**

-spindle driven by gearbox
-feed can be manual or automatic

Diagram:

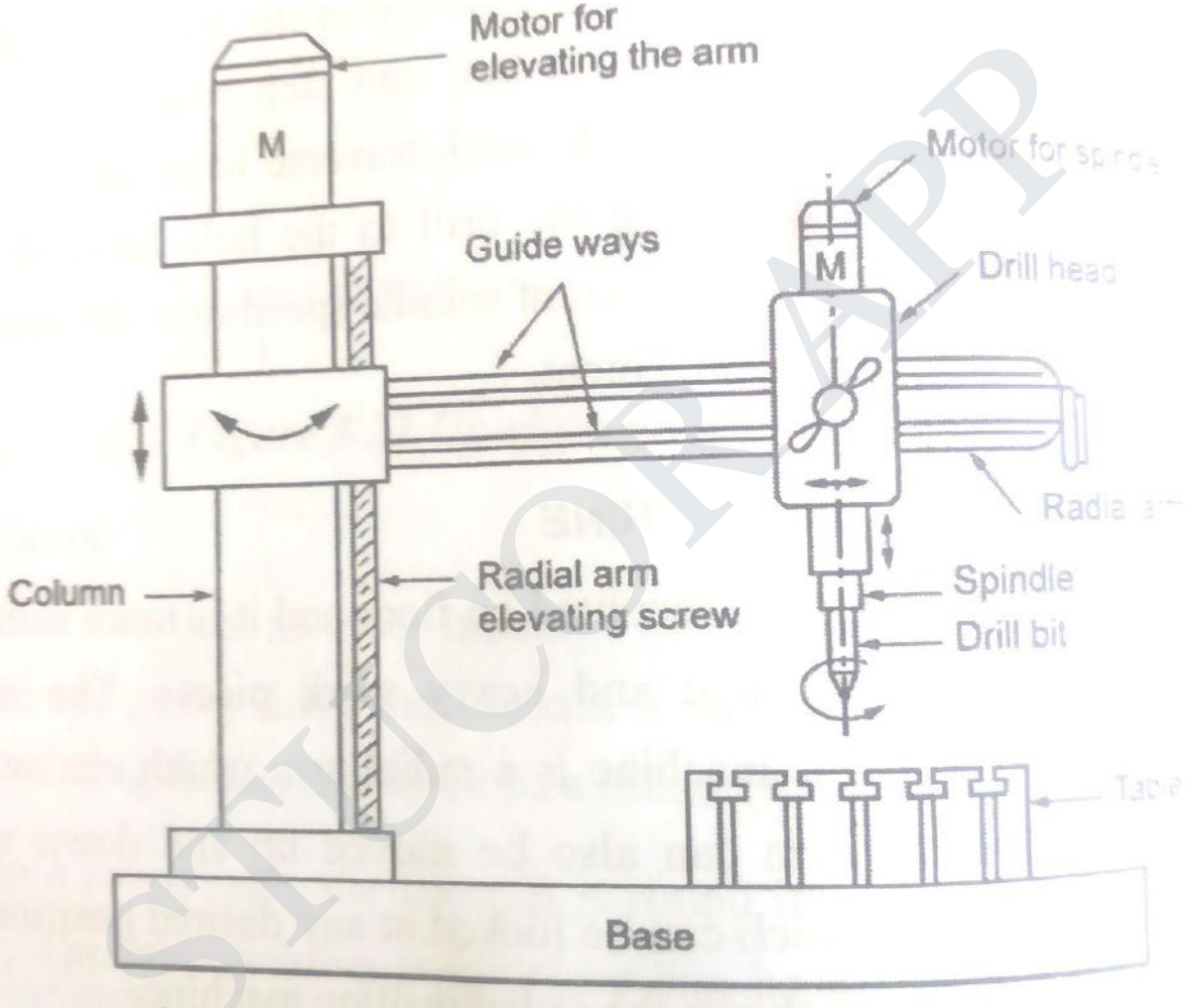

Figure 3.23 Radial drilling machine

Classification of Radial Drilling Machine

i. Plain Type
ii. Semi – Universal type
iii. Universal type

ii) Various Operation in Drilling Machine:

- It is the process of producing hole on the work piece by using a rotating cutter called drill.
- The machine on which the drilling is carried out is called driling machine.

List of operations:

1. Drilling
2. Reaming
3. Boring
4. Counter Boring
5. Counter sinking
6. Spot facing
7. Tapping
8. Trepanning
9. Undercutting

Finishing Process:

10. Grinding
11. Lapping
12. Honing

1. Drilling:

- Creating a hole.
- Hole is not accurate.
- Rough surface finish.
- The hole is larger than the drill bit.

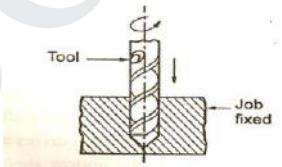

Figure 3.27 Drilling

2. Reaming:

- Process of sizing and finishing the already drilled hole.
- It can't produce hole.
- Remove less metal of about 0.375mm.
- Cutting tool name-reamer.

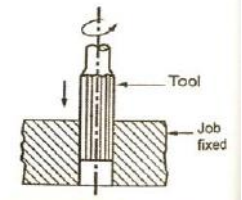

Figure 3.28 Reaming

3. **Boring:**
- Enlarging drilled hole.
- Accurate hole.
- Slow process.

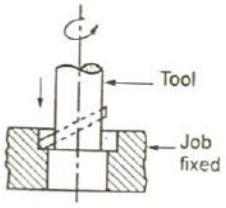

Figure 3.29 Boring

4. **Counter boring:**
   - Enlarging the end of a hole cyclindrically.

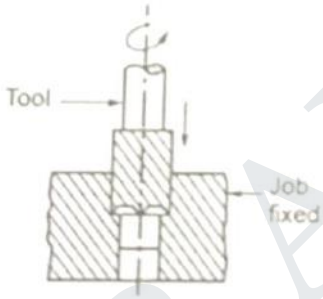

Figure 3.30 Counter boring

5. **Counter sinking:**
   - Enlarging the end of a hole cone-shaped.

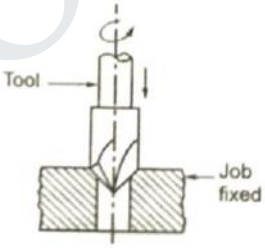

Figure 3.31 Counter sinking

6. **Spot facing:**
   - Smooth and square surface finish.

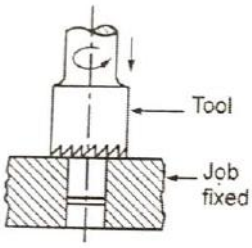

Figure 3.32 Spot facing

7. **Tapping:**
   - Creating internals threads.
   - Cutting tool name-tap.

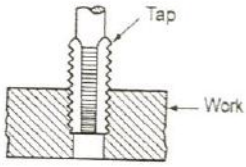

Figure 3.33 Tapping

8. **Trepanning:**
   - Producing a large hole (diameter over 50 mm) by removing the metal along circumference of a hollow tool.
   - Pillot inside the trepanning tool – produce large concentric holes.

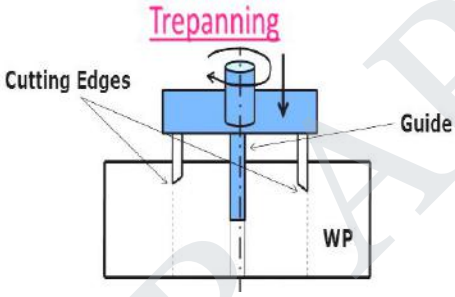

9. **Undercutting:**
   - Enlarging the hole at somewhere between its end.

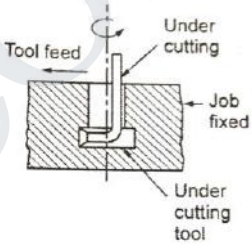

Figure 3.35 Undercutting

Finishing Process:

10. **Grinding:**
   - Removing large amount of stock with respect to lapping
   - Surfacse accuracy upto 0.0025 mm
   - Tool – Grinding wheel

11. **Lapping:**
   - Sizing hardened holes
   - Extremely limited in stock removal

12. **Honing:**
   - Finishing relatively large holes
   - By means of relatively slow moving abrasives

2. Explain the Gear cutting process in detail.

Gear

- Toothed metal.
- Transmit power and motion
- Helps in varying speed.

Gear Cutting.

Process of making gears.

Types of gear cutting

1. Gear cutting by single point form tool.
2. Gear cutting by shear speed shaping process
3. Gear milling using forward end mill.
4. Gear broaching.
5. Template method.

Gear cutting by single point form tool.

- Single point cutting tool is used.
- Shaping machine / planning machine.
- Both spur and bevel gears can be cut.
- Work is mounted between 2 centers.
- Work reciprocates.
- Blank should be accurately set.
- Feeding downwards depth increases.

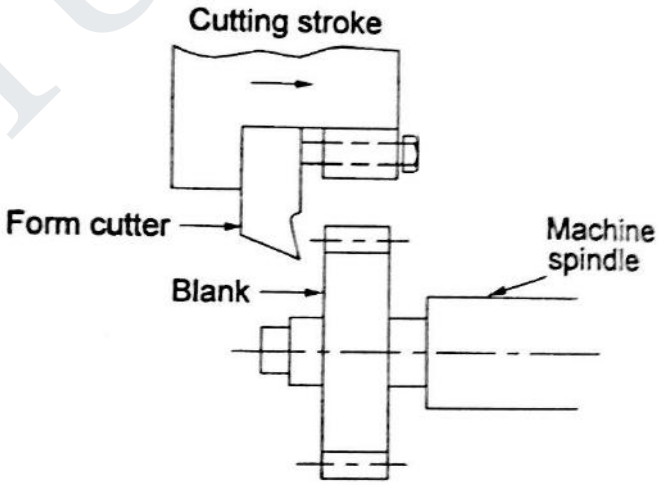

Fig. 4.39. Gear cutting by a single point cutting tool

Gear cutting by shear speed shaping process

- Form tools are radially arranged.
- No of form tools= no of teeth.
- Tooth spaces cut at the same time.
- In return strokes, tool is moved outwards.
- Depth of cut ≈ radial movement of tool.

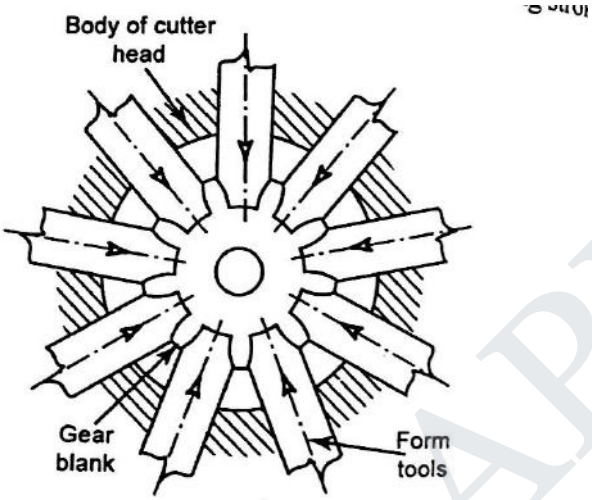

Fig 4.40. Gear cutting by speed shaping

Gear milling using forward end mill

- Mill cutter is held on spindle –vertical milling machine.
- Axis of both cutter and gear blank is perpendicular.
- After 1 tooth, the work is indexed.
- Spur, helical or herring bone gear can be cut in this method with large module.

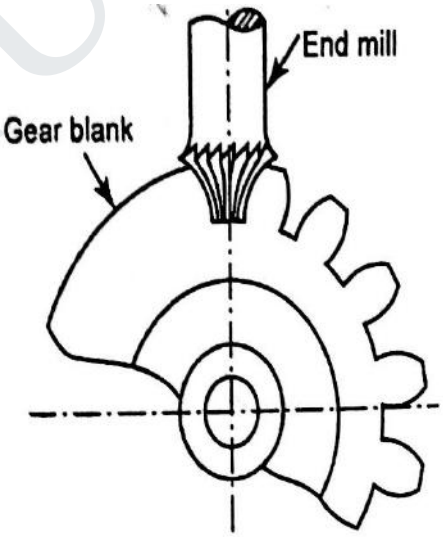

Fig. 4.41. Gear milling by formed end mill

Gear broaching.

- Mainly internal gear.
- No. of cutting edges in broaching tool = gear teeth.
- Even small gear can be cut in single stroke.
- Mass production.
- Very costly.

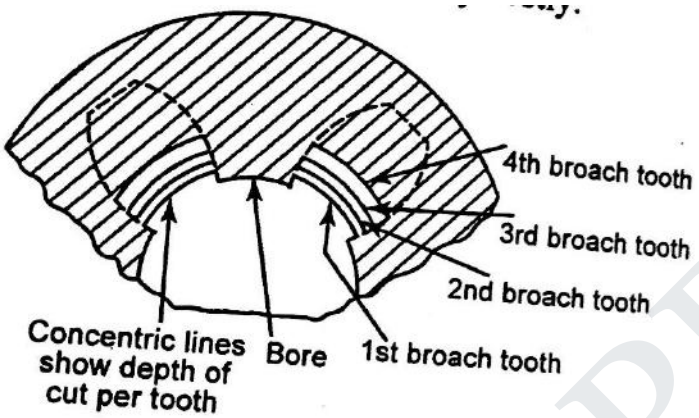

Fig. 4.42. Gear broaching

Template method.

- Single point cutting tool reciprocates on frame
- One frame end is pivoted.
- Other end connected to follower.
- Follower rests on stationary template.
- Tool movement is guided by template.

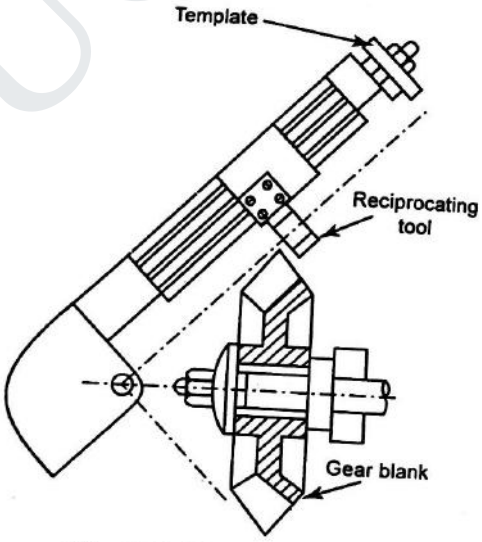

Fig. 4.43. Template method

3. Explain the Gear hobbing with neat sketch.

Gear hobbing

Hobbing = gear generation using rotating cutter called hob.

Working

- Cutter have grooves with proper rake & clearance angle
- Hobs maybe be single or multithreaded.
- Gear blank mounted on vertical arbor.
- Hob mounted in rotating arbor.
- To cut parallel teeth, hob axis is tilted. Through hob lead angle ∞

  ∞ = 90 - ∞1
- To cut helical gears, axis of hob inclined to horizontal by ∞
- If helix of hob and the helix of gear to be cut are different
- Lead angle, ∞ = θ+ (90-∞1)
- If helix of hob & helix of gear are both right handed or left handed
- Lead angle, ∞ = θ - (90-∞1)

  [Θ-helix angle of helical gear to be formed

  ∞1 helix angle of hob]

Diagram:

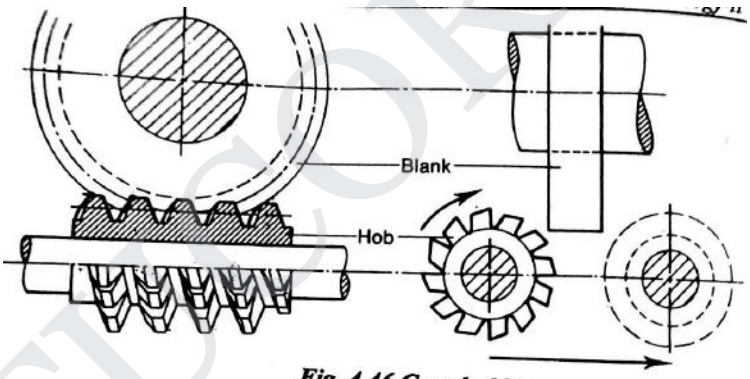

Fig. 4.46.Gear hobbing

Applications

- Generate spur, helical & worm gear.

Advantages

- With single hob more number of teeth produced.
- Spur& helical gears produced with same hob.
- Mass production.
- Perfect tooth profile.
- Automatic.

Limitations

- Internal gears cannot be generated.
- Cannot be applied very near to shoulders.

4. Explain the Gear Shaping with neat sketch.

Gear Shaping

Working

- Done on special type of machine called gear shaper.
- Pinion type cutter is used.
- Two types of cutter-----disc type and shank type.
- Axes of cutter and blank are parallel.
- Cutter is radially fed.
- Cutter reciprocates vertically.
- Cutter and work spindle are connected with gear trains.
- Thus relative speed is obtained.
- Rotation of cutter generates tooth profile.
- Work is relieved from cutter during return stroke.

Various movements from gear shaper

1. Rotary motion between cutter and blank.
2. Radial feed of cutter.
3. Vertical reciprocating motion of cutter.
4. Withdrawal motion of blank.

Diagram:

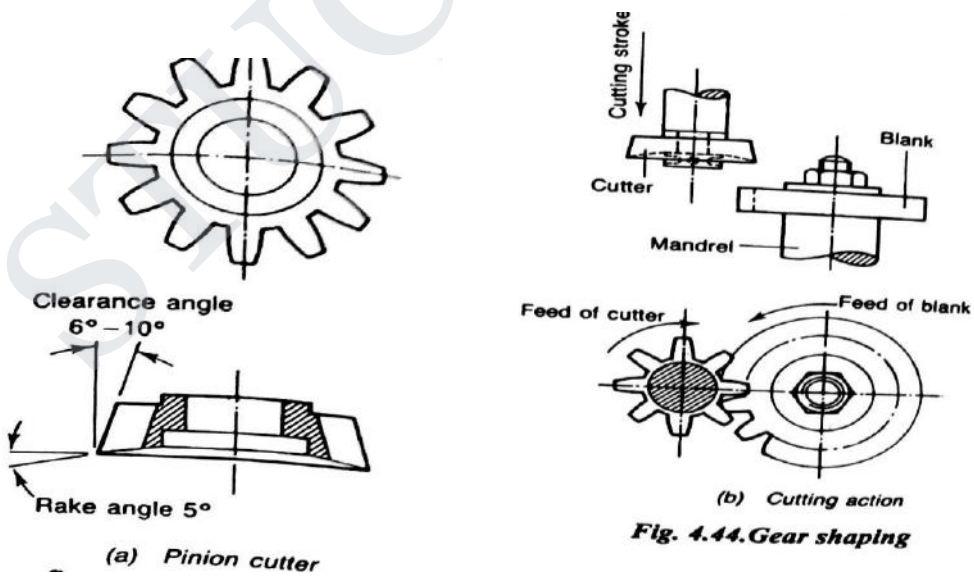

Fig. 4.44. Gear shaping

Applications

- Generate internal and external gears.
- Helical gears obtained with special attachment.

Advantages

- Various sizes of gear generated.
- Non-conventional gears can be cut.
- High degree of accuracy.
- Continuous cutting action.
- Simple mechanism.

Disadvantages.

- Worm gears cannot be cut.

5. Explain the column and Knee type milling machine and its types.

Column and Knee type milling machine:

The milling machine which is having column and knee parts in it is called as Column and Knee type milling machine.

Construction:

- Used for general shop works.
- It has vertical column.
- The column has guide ways.
- Knee slides up and down.

Classification: .

a. plain milling machine
b. vertical milling machine
c. universal milling machine
d. Omniversal milling machine

a. Plain milling machine:

- It is otherwise known as horizontal milling machine.
- Tool is attached in the horizontal axis

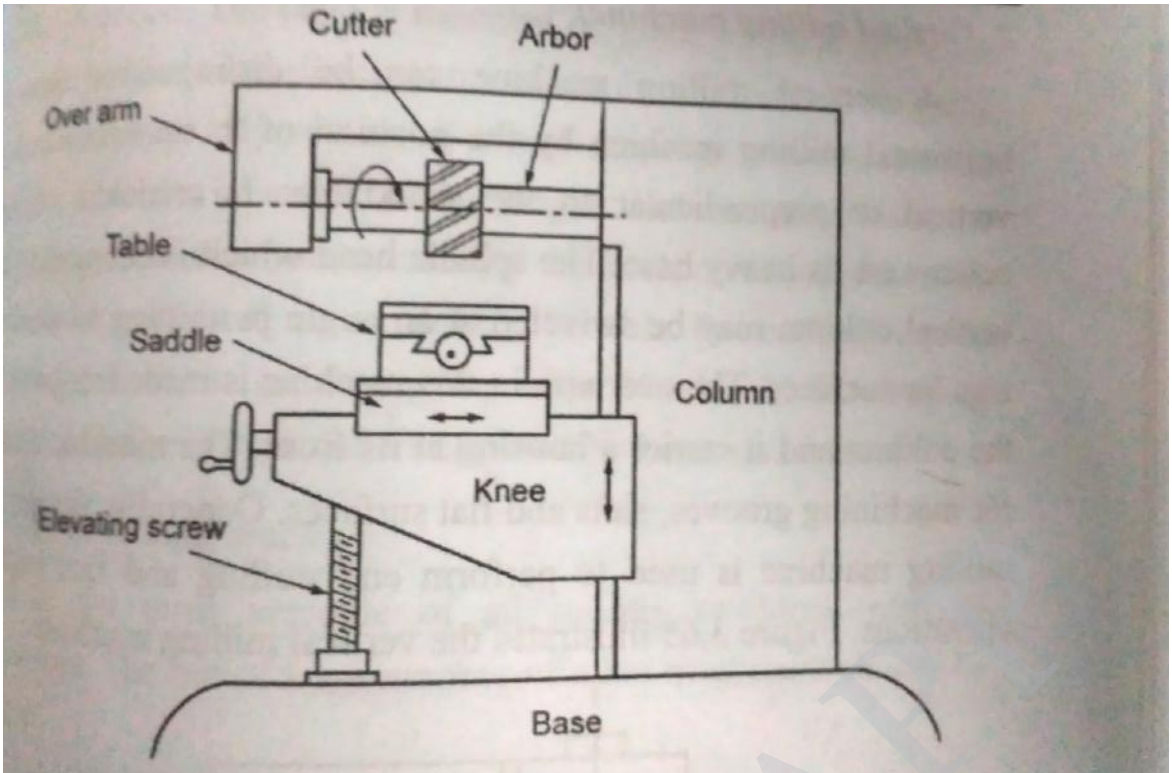

Figure 3.64 Horizontal milling machine

Construction And Working:

Base:

- It is the foundation of the machine.
- It is made of cast iron.

Column:

- Main support for the machine.
- Support and guides the knee.

Knee:

- It slides up and down.
- It supports saddle and the table.

Saddle:

- It carries the table.
- Provides traversed movement.

Table:

- T-slots along the length of the table.
- It supports the work piece.

Over arm:

- Guided by the top column.
- Hold the arbor end to prevent bending.

Arbor:

- Cutter are mounted on the arbor.
- Fit nose key for locating and driving.

b.Vertical milling machine:

- Tool is attached in the vertical axis
- It carries a vertical column on its heavy base.
- Spindle head may be swiveled at an angle.
- Used for machining grooves,slots and flat surfaces.
- Used to perform end milling and face milling.
- Knee carries an enclosed screw jack.
- Saddle is mounted on the knee.
- It is moved along the horizontal guide ways.
- It enables the table to move in cross direction.
- Lead screw tends to move the table in longitudinal direction.
- Thus the work get up and down movement.
- Power feeds to both saddle and table.
- Face milling and shell-end type cutter are used.

Diagram:

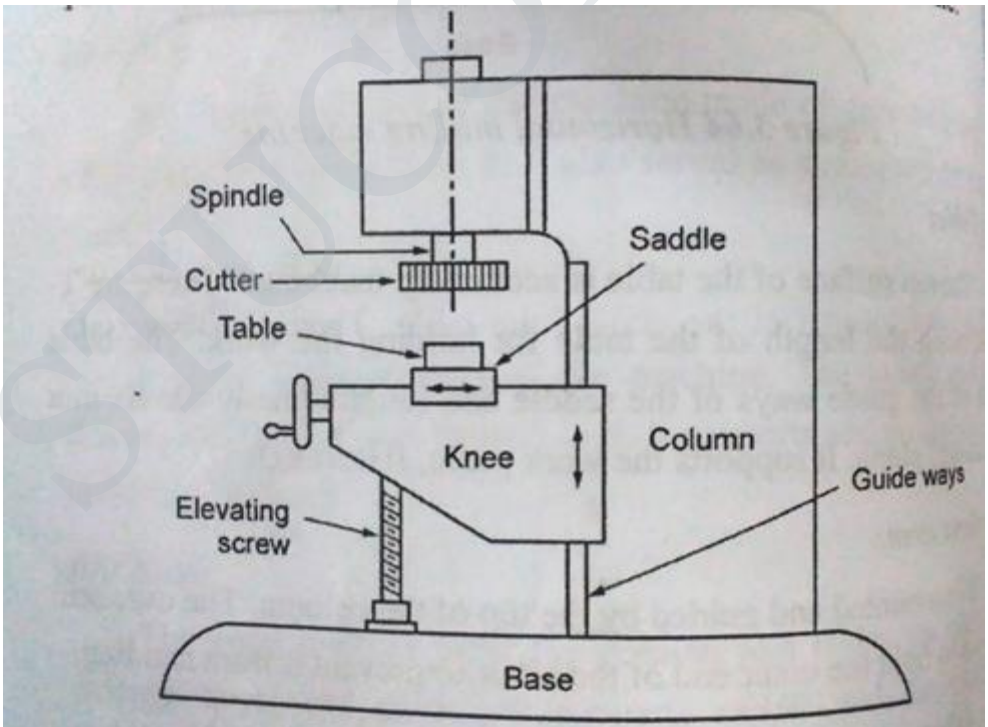

Figure 3.65 Vertical milling machine

These are the milling machines employed in column and knee type milling machine.

6. Write about Gear Finishing Process

GEAR FINISHING PROCESSES

The process of increasing the surface finish and dimensional accuracy.

Types:

- Conventional
- Abrasive methods.

Conventional:

i. Shaving:

ii. Abrasive methods:

- Grinding
- Honing
- Lapping

GRINDING

- Uses grinding wheel.
- Produce very fine finishes.
- Every grain in abrasive acts as microscopic single point cutting tool.

Types of grinding.

Surface grinding:

- Uses rotating abrasive wheel.
- Commonly done on cast iron and various types of steel.

Cylindrical grinding.

- Used to grind cylindrical surfaces.
- The five types of cylindrical grinding are: outside diameter (OD) grinding, inside diameter (ID) grinding, plunge grinding, creep feed grinding, and centerless grinding.
- Surface finishes can range from 2 to 125 micro inches.

HONING

- Honing is an abrasive machining process.
- Produces a precision surface on a metal workpiece by scrubbing an abrasive stone against it along a controlled path.
- Honing uses a special tool, called a honing stone or a hone
- Honing stones are usually more friable so that they conform to the shape of the workpiece as they wear in.
- The limitation on geometric accuracy in grinding is overcome in honing.
- Because the honing stone follows a complex path.
- Honing is of two types.
    1. Flat honing.
    2. Bore honing.

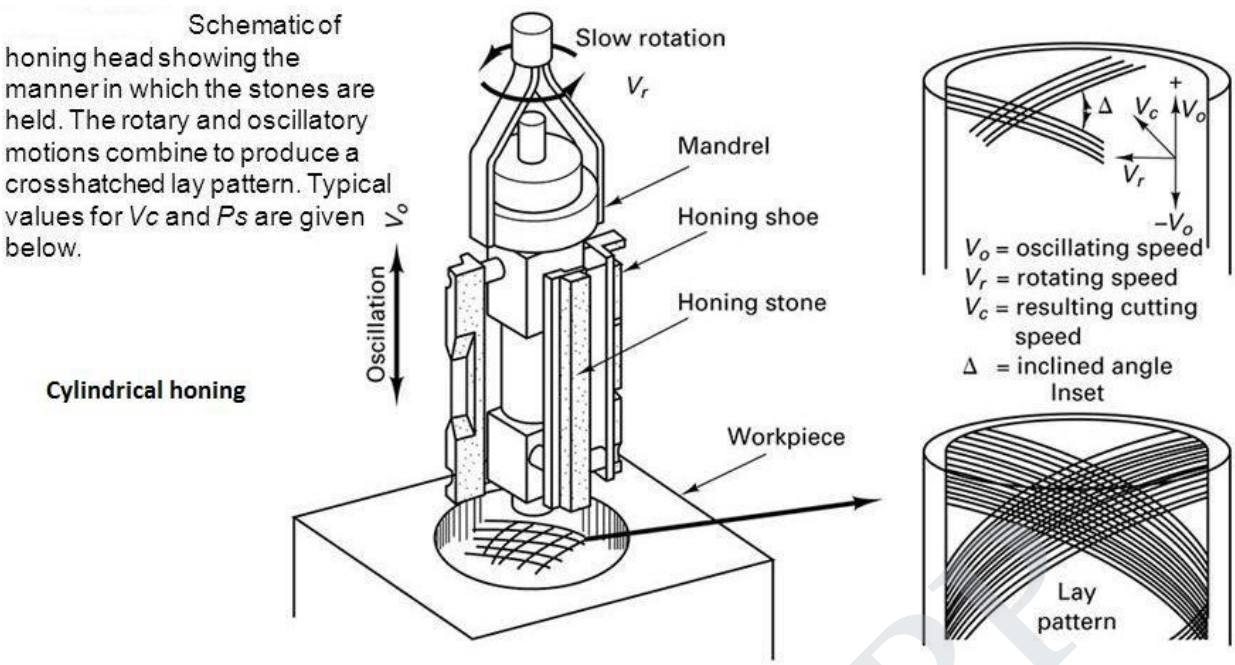

LAPPING

- Lapping is a machining process, in which two surfaces are rubbed together with an abrasive between them, by hand movement or using a machine.
- Lapping can be used to obtain a specific surface roughness; it is also used to obtain very accurate surfaces, usually very flat surfaces.
- Traditional lapping is a painstaking process using a wet abrasive slurry to slowly finish parts to precise flatness, parallelism and surface finish.
- In contrast, high-speed lapping uses a fixed abrasive wheel in place of the wet slurry.
- The high-speed lapping process is well-suited for parts with either a regular or irregular shape and a wide range of sizes.
- High-speed lapping is ideal for all types of metals, including steel, brass, aluminum, phosphorus bronze, tungsten carbide, cast iron, and powder metals.

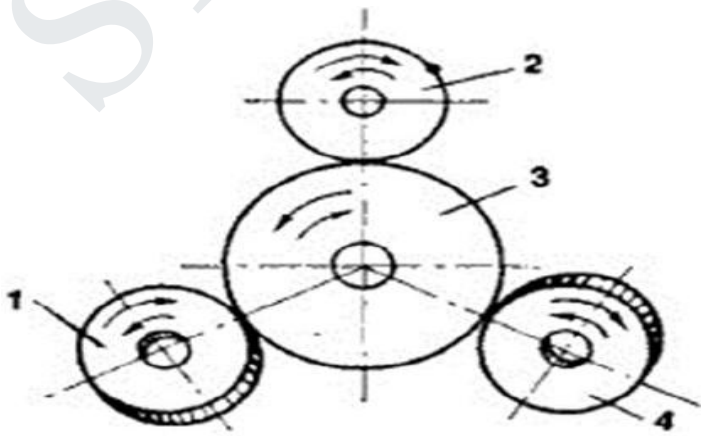

7. Write notes on BTA deep hole drilling.

Deep hole drilling machine

Very deep holes of L/D ratio 6 to even 30, required for rifle barrels, long spindles, oil holes in shafts, bearings, connecting rods etc, are very difficult to make for slenderness of the drills and difficulties in cutting fluid application and chip removal. Such drilling cannot be done in ordinary drilling machines and by using ordinary drills. It needs machines like deep hole drilling machine such as gun drilling machines with horizontal axis or vertical axis.

These machines are provided with:

- High spindle speed.
- High rigidity.
- Tool guide.
- Pressurized cutting oil for effective cooling, chip removal and lubrication at the drill tip.

Deep hole drill

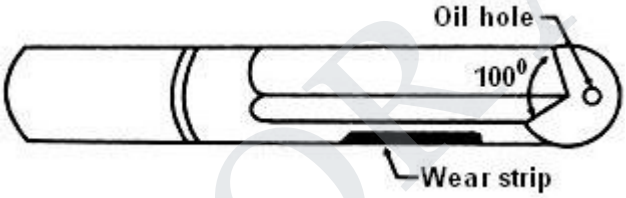

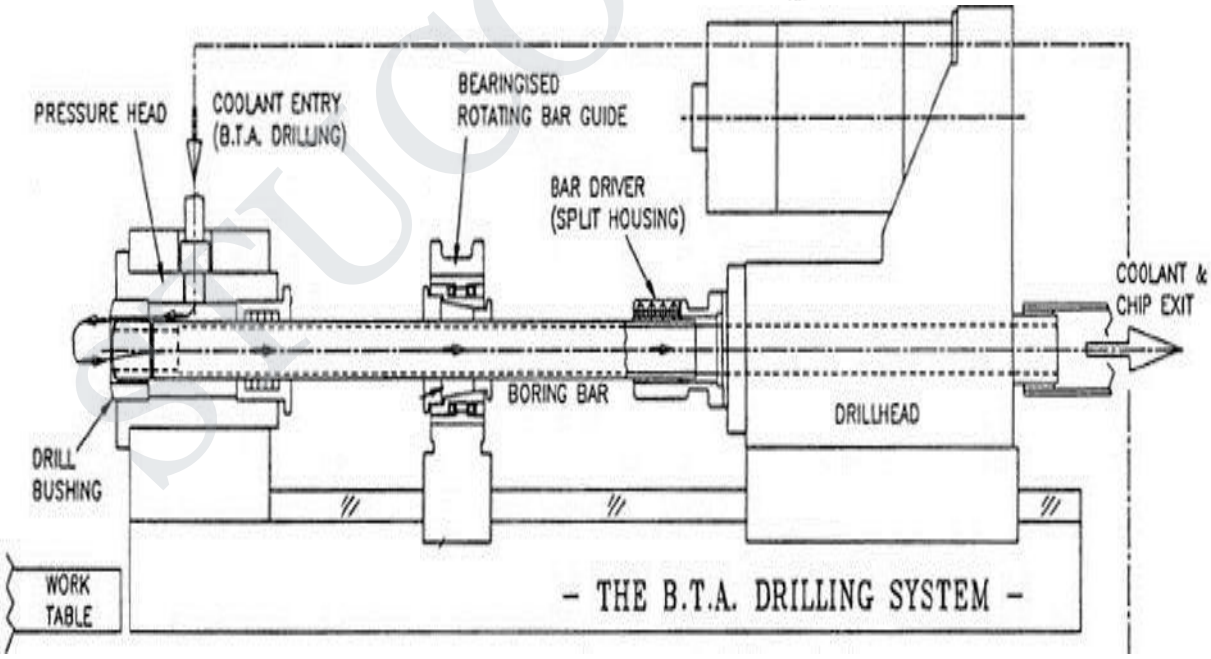

8. Explain about the operation that can be performed in the milling machines.

Milling Operations:

1. Plain Milling
2. Face Milling
3. Angular Milling
4. Straddle milling
5. Gang Milling
6. Gear cutting
7. End Milling
8. T-slot milling

Plain Milling:

Flat horizontal surface parallel to the axis of the cutter using plain milling cutter.

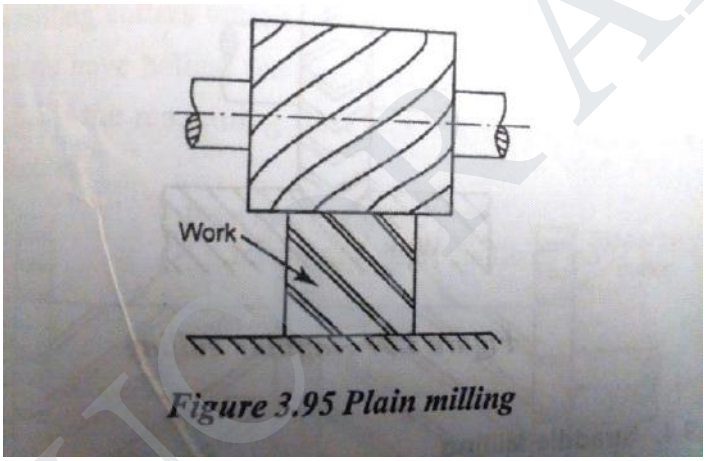

Figure 3.95 Plain milling

Face Milling:

Flat surface on face of the work piece which is at Right angle to Axis of Rotation

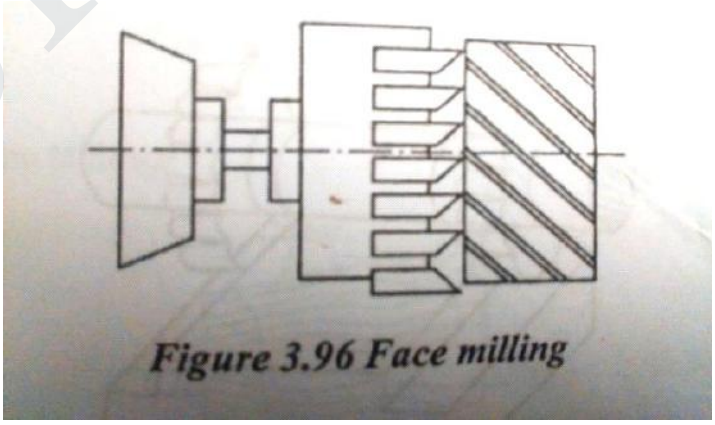

Figure 3.96 Face milling

Angular Milling:

Flat surface at an angle, other than the Right angle of the axis of Revolving cutter.

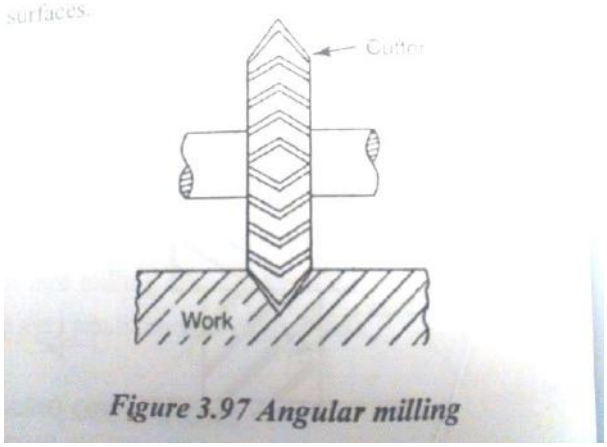

Figure 3.97 Angular milling

Straddle Milling:

Two vertical flat surface on both sides of the job by using two side milling cutter separated by collars.

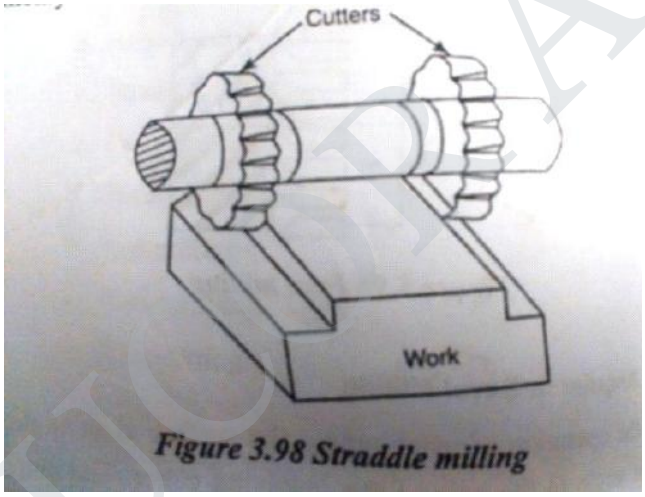

Figure 3.98 Straddle milling

Gang Milling:

Many surface of a job simultaneously by feeding the table against a number of required cutter.

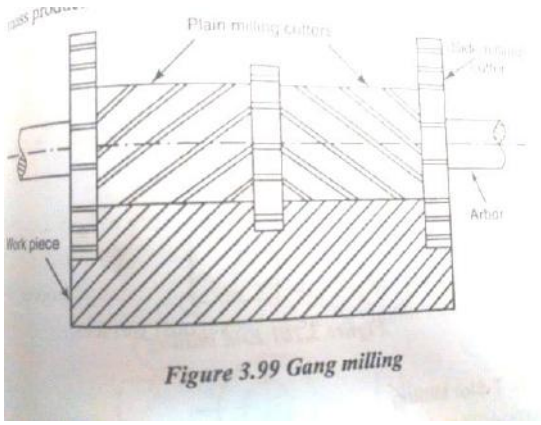

Figure 3.99 Gang milling

Gear Cutting:

- Cutting different type of gear on milling machine.
- Form relieved cutter which having the profile corresponding to required tooth space of gear.
- Each spaced gear teeth are cut on a gear blank by holding the work.

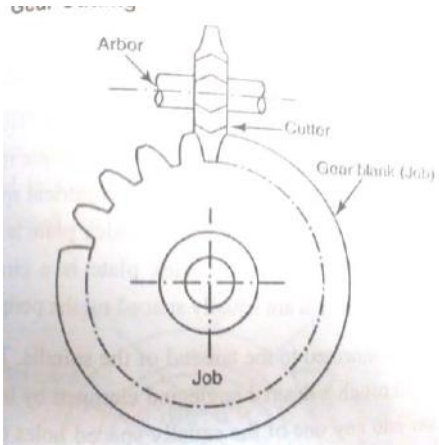

Figure 3.103 Gear cutting

End Milling:

Both peripheral and face milling operations and generating vertical, horizontal or angular surfaces.

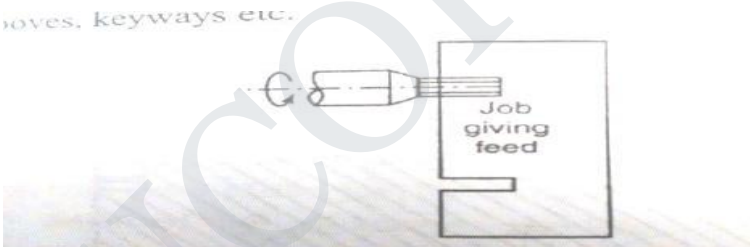

Figure 3.101 End milling

T- slot Milling:

- End milling operation is made
- T- slot is made to enlarge slot and to mill the bottom face slot.

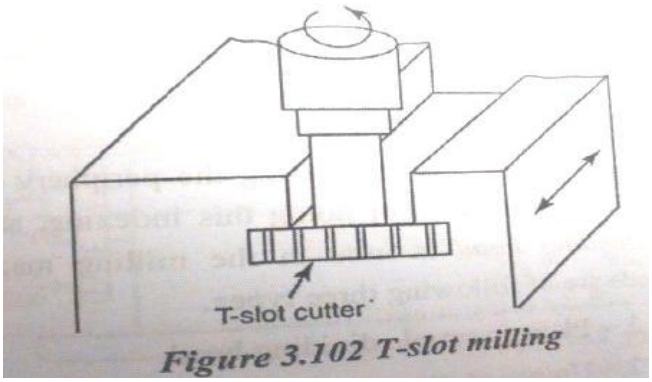

Figure 3.102 T-slot milling

9. Write about tool and cutter grinder.

Tool grinding may be divided into two subgroups: tool manufacturing and tool resharpening. There are many types of tool and cutter grinding machine to meet these requirements. Simple single point tools are occasionally sharpened by hand on bench or pedestal grinder. However, tools and cutters with complex geometry like milling cutter, drills, reamers and hobs require sophisticated grinding machine commonly known as universal tool and cutter grinder. Present trend is to use tool and cutter grinder equipped with CNC to grind tool angles, concentricity, cutting edges and dimensional size with high precision.

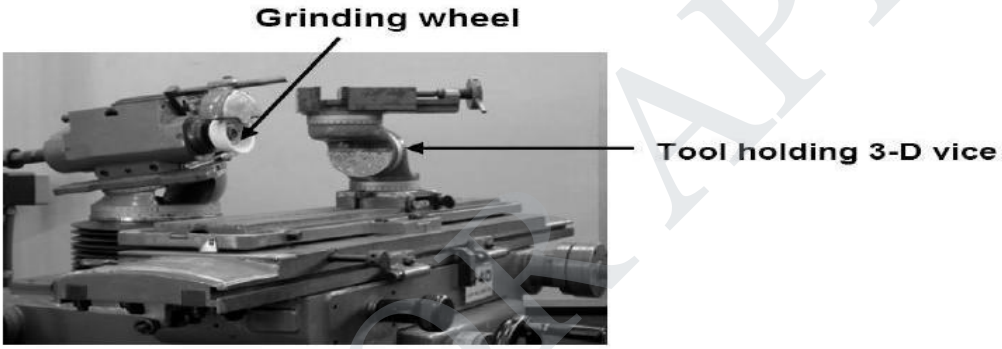

Fig. 29.20 *Pictorial view of a tool and cutter grinder*

10. Discuss the principle of operation of a shaper with a neat sketch

Shaper:

- Reciprocating type of machine
- Flat surface

Important Terms

- Cutting Stroke
- Idle stroke

Types of Machining:

- Table is moved in a cross-wise direction
- Tool head is moved perpendicular to the table
- Tool head is fed at an angle to produce inclined surfaces

Principle Parts:

1. Base
2. Column
3. Cross rail
4. Saddle
5. Table
6. Ram
7. Tool head

Construction & Working:

Base:

- Heavy and robust in construction & made by cast iron
- Support all other parts
- Absorb vibrations

Column:

- Box typr structure
- Mounted on the base
- Quick return mechanism
- Two guide ways on the top

Cross Rail:

- Slides on the vertical ways of the column
- One is for elevating the table
- Other one is for cross travel of the table

Saddle:

- Mounted on the cross rail
- Holds the table in position – without shake

Table:

- Box type rectangular hollow cast iron
- Slides along the horinzontal guide ways
- Vertically be moved by the elevating screw

Ram:

- Cross ribs for rigidity
- Reciprocating type
- Slides over the guide ways
- Carries the tool head at the front end

Tool Head:

- Holds rigidly the tool having swivel base
- Tool head can be swiveled
- Verticl slide

Diagram:

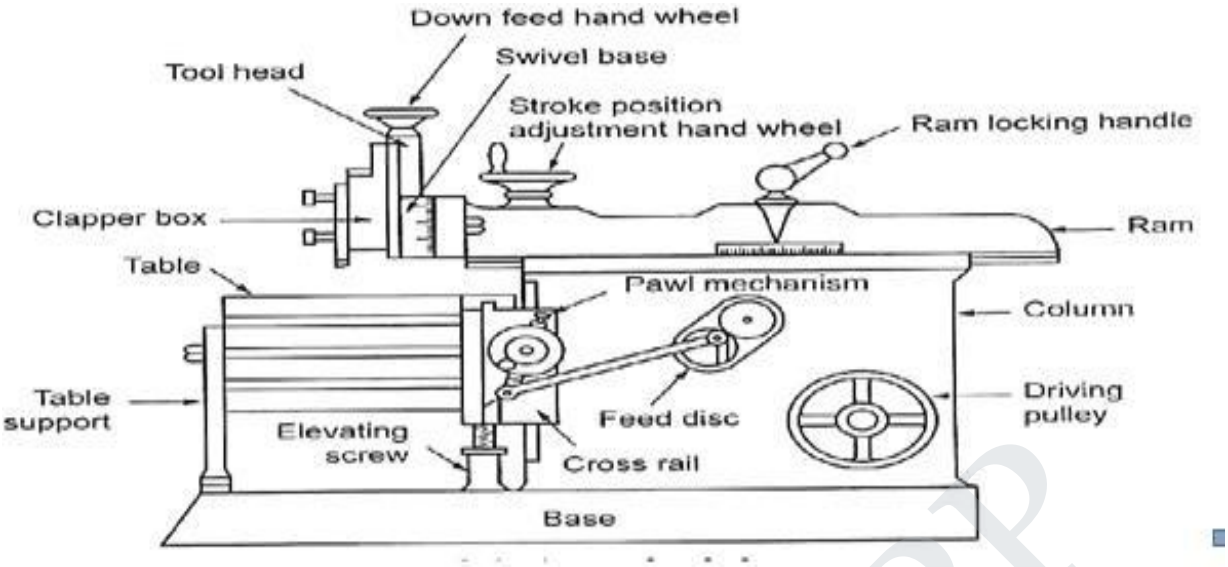

Department of Mechanical Engineering

Important questions for university exam

ME8451 Manufacturing Technology II

UNIT - 4

1. Describe the cylindrical grinding with neat sketch.

Grinding

Grinding is the operation of removing the metal by using rotating abrasive wheels.

Types of grinding

1. Cylindrical grinding
2. Surface grinding.

Cylindrical grinding

Principle :

The work piece is held between centers .It is rotated by a dog and a faceplate.

Types of Movement:

There are four movements in a cylindrical grinding

i. Rotation of work piece about its axis
ii. Rotation of grinding wheel about its axis
iii. Longitudinal feed
iv. Movement of wheel into the work perpendicular to axis

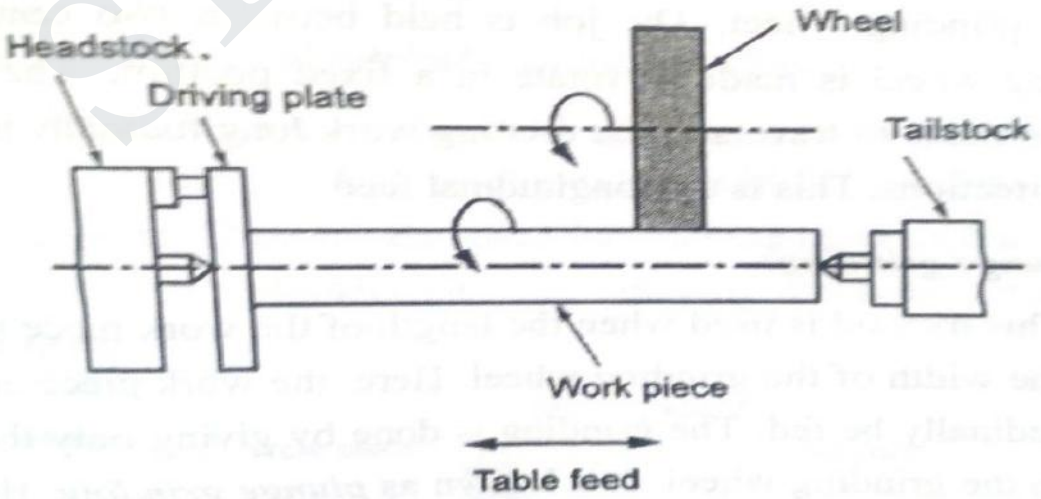

Types of operations in cylindrical grinding :

1. Traverse grinding
2. Plunge grinding

Traverse grinding :

- The job is held between two centers
- The grinding wheel is made to rotate in a fixed position
- The rotating work longitudinally moves in both direction
- This method is done by longitudinal feed.

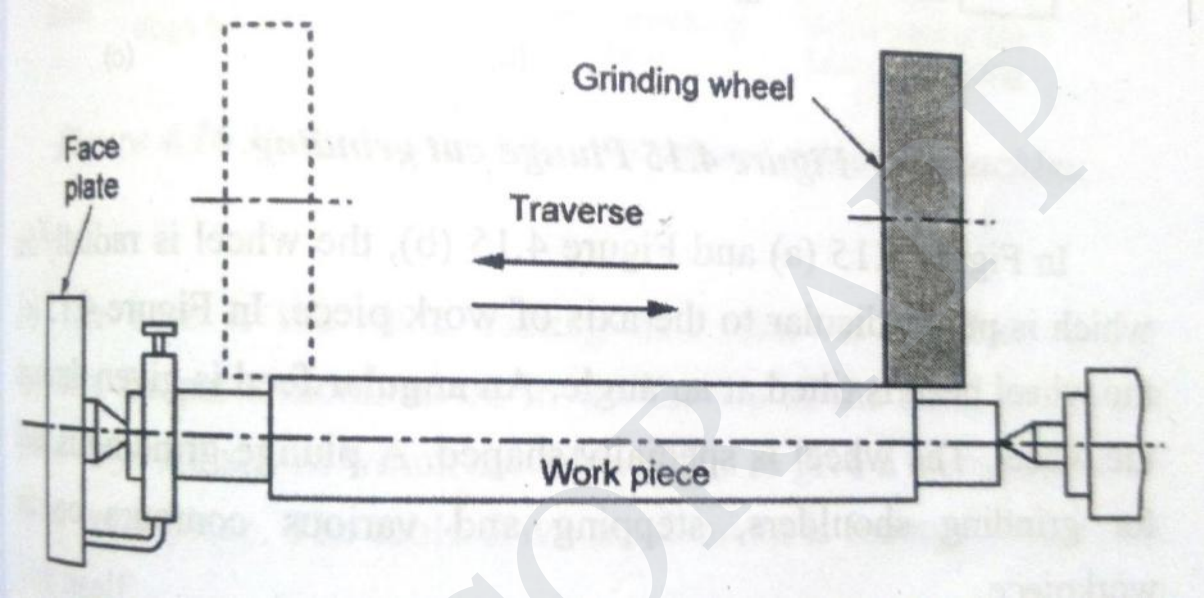

Plunge grinding :

- This method is used when the length of the work piece is lesser than the width of the grinding wheel.
- Work piece need not longitudinally be feed.
- The grinding is done by giving only the cross feed .it is known as plunge grinding

Example: stepping ,grinding shoulders.

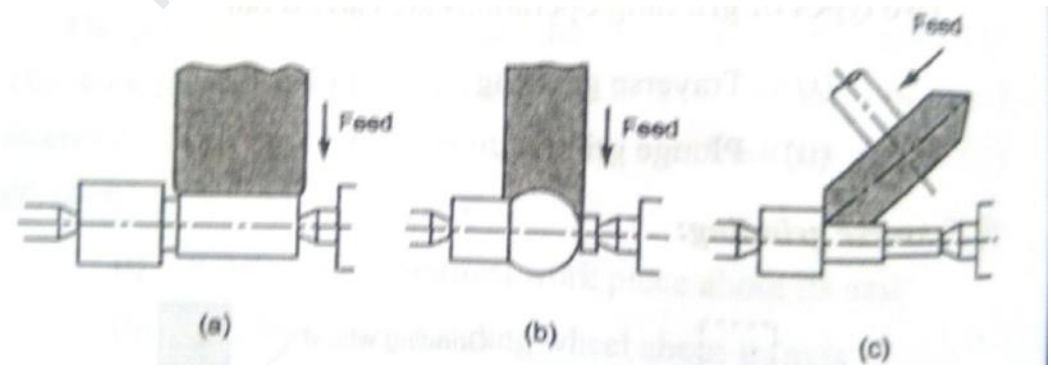

Types of cylindrical grinding :

i. Plain centre type cylindrical grinding machine

ii. Center type universal grinder.

Plain centre type cylindrical grinding machine :

- They are used for grinding parts such as tapers ,fillets contoured cylinder etc.
- The grinding machine consist of various parts

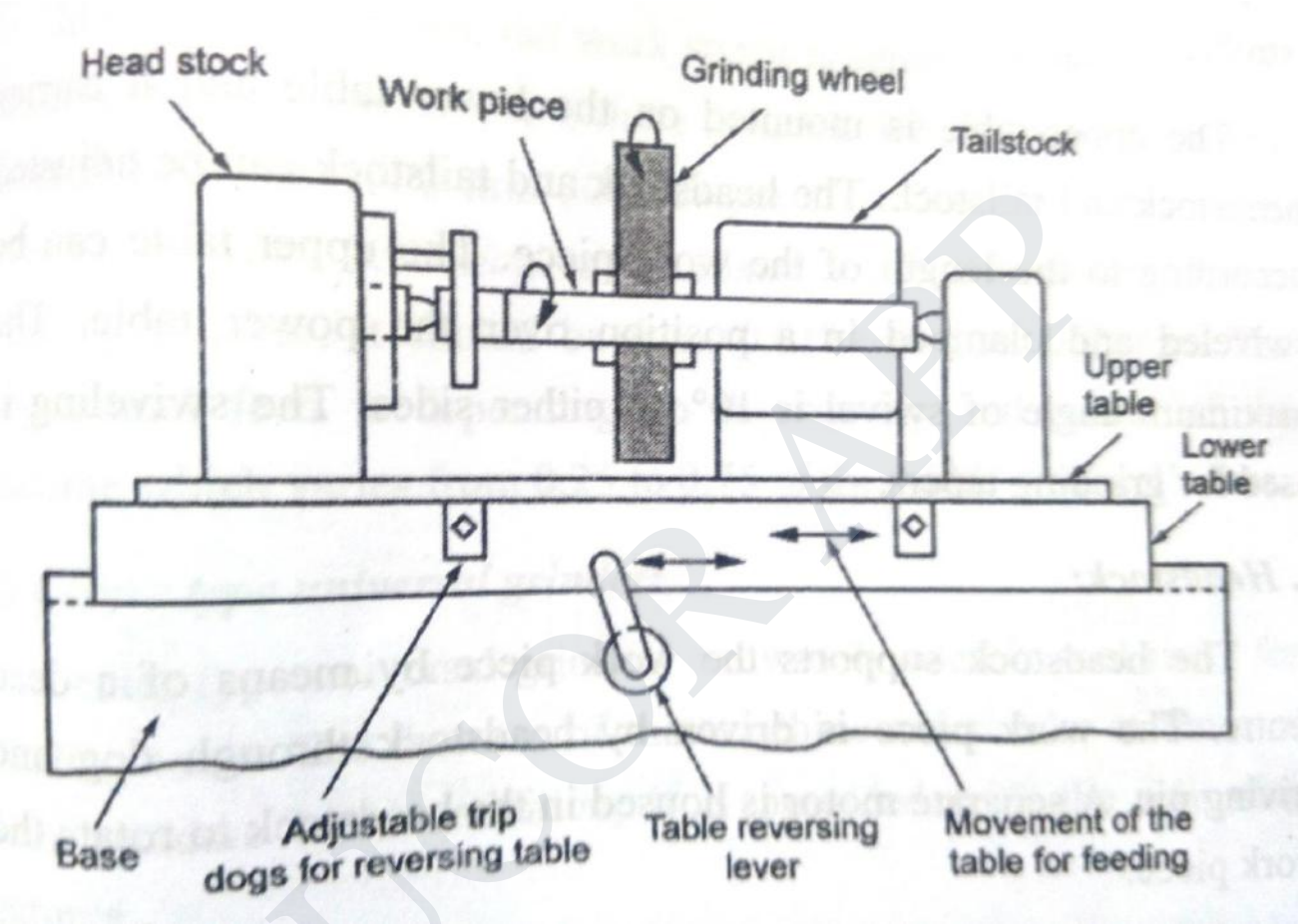

Centre type universal grinder :

- Universal grinders are widely used in tool room for grinding tools.
- It is similar to those of plain grinder.
- The centre of the head stock spindle can be used alive or dead.
- The wheel head can be swiveled in a horizontal plane in any angle.

2. Describe surface grinding with neat sketch.

SURFACE GRINDING

- Surface grinding machines are used to produce and finish flat and plane surfaces.
- Various parts such as guide ways, piston rings, valves,dies etc.

Various types of surface grinding

1. Horizontal spindle reciprocating table surface grinder
2. Horizontal spindle rotary table surface grinder
3. Vertical spindle reciprocating table surface grinder
4. Vertical spindle rotary table surface grinder.

Horizontal spindle reciprocating table surface grinder.

- The table reciprocates along the guide ways for giving longitudinal feed.
- The table top has T-slots for mounting the magnetic chuck.

Working:

- The work piece reciprocates under the table
- The grinding wheel does the grinding.
- The cross feed is given to the work piece after every stoke.
- For rough –depth of cut 0.02mm to 0.06mm
- For finishing –depth of cut 0.005 to 0.01mm

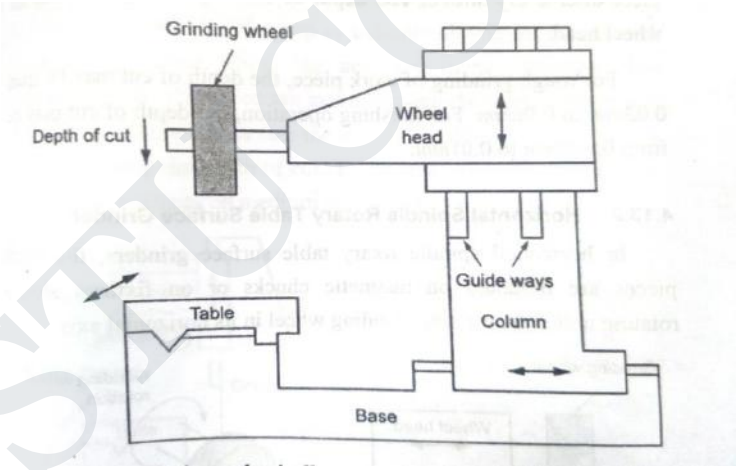

Horizontal spindle rotary table surface grinder

- The work pieces are mounted on magnetic chucks slowly rotating under the rotating grinding wheel.
- The wheel head is lowered to give the required depth of cut .
- It is used for small and medium size works.

Vertical spindle reciprocating table surface grinder.

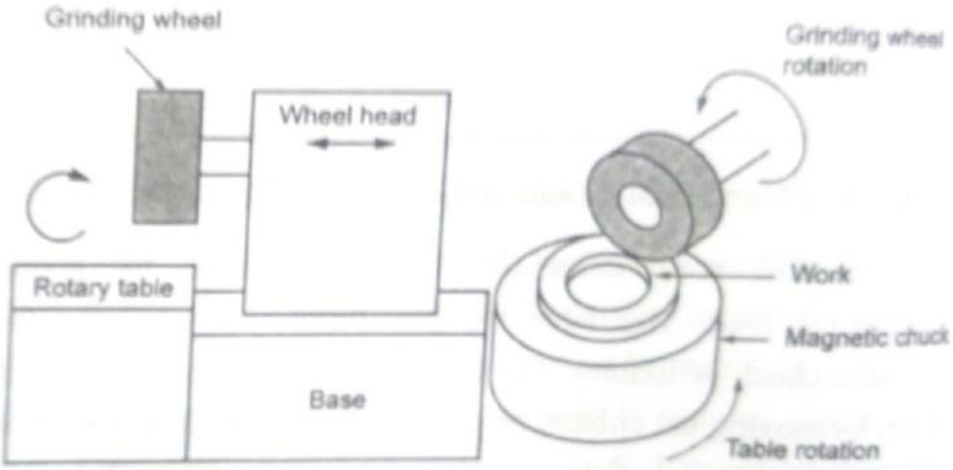

- The work piece is clamped on the reciprocating work table using magnetic chuck or fixture.
- The grinding wheels rotates about a vertical axis
- The longitudinal and cross feed are given through the table
- The face or side of the grinding wheels cuts the metal.
- The wheel head is lowered down for giving the depth of cut.

Vertical spindle rotary table surface grinder

- This machine has all parts similar to a horizontal type machine.
- The grinding spindle is vertically mounted on the face of a column and rotates in fixed position .
- The grinding wheel is lowered for giving the depth of cut .
- The work piece is clamped on the table using a magnetic chuck
- It is used for grinding large quantity of small work piece.

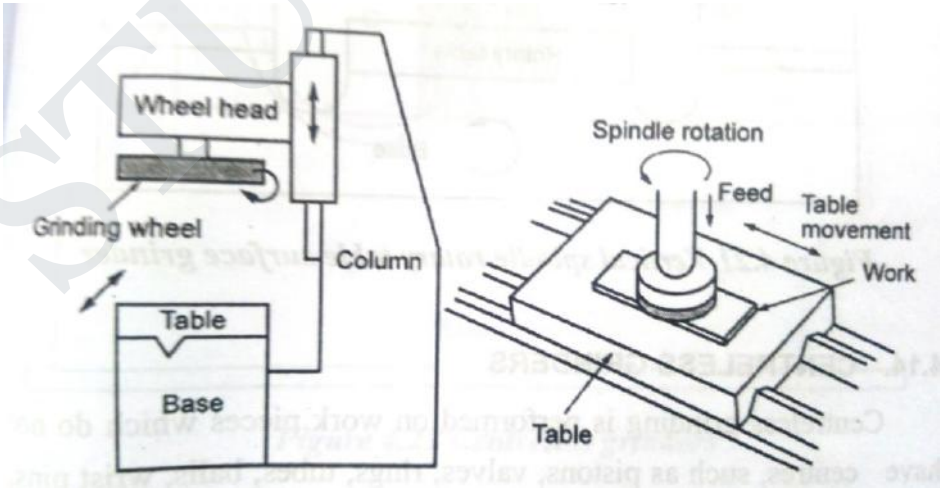

3. Write briefly about grinding wheel .

GRINDING WHEELS

- Made up of small abrasive particles held together by bonding materials.
- Small abrasive particles are used in grinding wheels – abrasive grains

Abrasives classification:

- Natural abrasives & artificial abrasives.

Natural abrasives:

Sandstone, Emery, Corundum, Diamond

Artificial abrasives:

- Aluminum oxide, silicon carbide, artificial diamond Boron Carbide, Cubic Boron Nitride.

Bonds:

- An adhesive substance.
- Holds the abrasive grains together to form the grinding wheel.

Classification of bonds:

1. **Organic bond:** Resinoid, rubber, shellac and oxychloride bonds.
2. **Non organic bond:**Metallic, vitrified and Silicate bonds.
3. **Vitrified bond :**
   - made of clay and water.
   - The abrasive grains and fusible clay is placed in moulds and air dried to room temperature.

   Advantage:
   - Made porous.
   - Enables quick stock remover.
   - Not affected by water, oil, acid, alkaline,

   Disadvantage:
   - slow manufacturing process.
   - Cracks developed.
4. **Silicate bond**
   - Made up of mixing abrasive grains with silicate of soda.
   - More rapid process.
   - No tendency to weaken the grain because of low temperature.

   Disadvantages:
   - No extra hard wheels can be produced.
   - Wheel wear is high.

5. **Resinoid bond**
   - Made by mixing abrasive grains and synthetic resins.
   - Grain Size
   - Refers to actual size of abrasive particles.
   - Denoted by number.
   - Number is equal to the number of meshes in 254 cm of a sieve.
   - Larger grain number, smaller will be the grain size and vice versa.
   - For rough grinding coarse grinding wheels (smaller grit number) are used.
   - For finishing grinding fine grained wheels (larger grit number) are used.

GRADE

- Indicate the strength which the bonding material holds the abrasive grains in the grinding wheel.
- It does not refer to the hardness of abrasive grains.

Structure of wheels.

- The spacing between the abrasive grains or density of the wheel.
- Structure of grinding wheel is designed by a number.
- Higher the number, wider is the spacing.
- When spacing is small, the structure is called dense structure.

Selection of grinding

- Selection of a proper grinding wheel is very important for getting the best result in the grinding work.
- Proper grain size, bond, grade, strength, shape, size of the wheel should be selected to meet the specific requirement.

Factors depending selection:

i. **Constant factor.**
   - Physical property of material to be ground.
   - Mount and rate of stock to be removed.
   - Area of contact.
   - Type of grinding machine.

   Variable factor.
   - Work speed.
   - Wheel speed.
   - Condition of grinding machine.

ii. **Personal factor.**
   - Reconditioning of grinding wheel.
   - During grinding operation the grains of the wheel are subjected to wear.

RECONDITIONING METHODS:

i. **Dressing**

Dressing is done by using tool called dresser.

ii. **Truing**

- Trims the cutting surface of the wheel.
- Done by diamond truing tool.

Shapes of grinding wheel.

- Cylinder shaped wheel produces flat surface.
- Flaring wheel is used for sharpening.

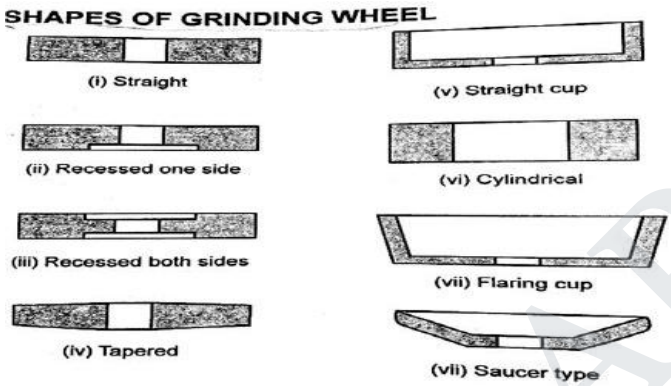

Fig. 4.5. Standard grinding wheel shapes

4. Explain about Broaching machine.

Broaching:

- Machining surface with special multipoint cutting tool
- Tool – Broach
- Job completed – one stroke of machine
- It is faster and cheaper

Types of Broaching machine:

According to cutting motion

- Horizontal broaching machine
- Vertical broaching machine

According to purpose

- Internal broaching machine
- External broaching machine

According to method of operation

- Pull broaching machine
- Push broaching machine

HORIZONTAL BROACHING MACHINE

Horizontal internal broaching machine:

- Box type bed
- Length of bed is twice length of stroke
- Job is located in adopter
- Small end of broach is inserted in hole of job
- It is connected to pulling head
- Ram connected to hydraulic drive
- Rear end supported by guide
- Machine speed – 2 to 15 m per second
- used for making keyways, splines etc

Horizontal surface broaching machine:

- Broach is pulled over top surface of workpiece
- Cutting speed - 3 to 12 rpm
- Return speed – 30 mpm
- **Broaches are always connected to draw head**

Vertical broaching machine :

Push down type:

- Used in surface broaching operation
- Broaching tools mounted – operated hydraulically
- Slide is provided – quick return mechanism
- Worktable – mounted on base
- Workpiece held in fixture

Pull down type:

- Used for internal broaching operations
- Machine has elevator at top
- Tail end of broach is gripped with elevator
- Broach is automatically engaged by pulling mechanism

Pull up type:

- Ram slides on vertical column
- Ram carriers pulling head at bottom
- Broach enters job for operation
- Work is free and falls into container after operation

Continuos broaching machine:

i. **Horizontal type continuos broaching machine:**
   - Driving units – two sprockets
   - Fixtures mounted for locating and holding workpiece
   - Broach tool is horizontally fixed & operation takes place when work moves under tool
   - Used for mass production

ii. **Vertical continuos broaching machine:**
   - Axes of sprockets are vertical – vertical broaching machine
   - Operation – similar to horizontal type
   - Rotary type continuous broaching machine

iii. **Rotary table:**
   - They are used for broaching small parts.

Advantages of Broaching:
- Semi-skilled operator can do this operation
- It is used for mass production
- Cutting fluid can be easily apllied

Limitations:
- Initial cost is high
- Not suitable for removal of large amount of stock
- Tool grinding is difficult

5. Classify the grinding wheel. Explain the working principle of centreless grinding.

Types of grinding machines:

1. Rough machines
   a. floor grinders b. swing frame grinders c. portable grinders d. belt grinders.
2. Precision machines.
   i.)Cylindrical grinders
   a. Plain cylindrical grinders b. universal cylindrical grinders c.centreless grinders
   ii.) Surface grinders
      a. Reciprocating table
         i. horizontal ii. Vertical spindle.
      b. Rotary table
         i. horizontal ii. Vertical spindle.
   iii.)Internal grinders
   a. plain internal grinders b. universal grinders c. planetary internal grinders d. centreless internal grinders.

CENTRELESS GRINDING

Centreless grinding makes it possible to grind cylindrical work pieces without actually fixing the work piece using centres of a chuck. As a result no work rotation is separately provided. The process consists of two wheels, one large grinding wheel and another smaller regulating wheel. The work is held on a work rest blade. The regulating wheel is mounted at an angle to the plane of the grinding wheel.

The centre of the work piece is slightly above the centre of the grinding wheel. The work piece is supported by the rest blade and held against the regulating wheel by the grinding force. As a result the work rotates at the same surface speed as that of regulating wheel. The axial feed of the work piece is controlled by the angle of tilt of the regulating wheel. Typical work speeds are about 10 to 50m/min.

Centreless external grinding machine

This grinding machine [shown in Fig. 4.30] is a production machine in which out side diameter of the work piece is ground. The work piece is not held between centres but by a work support blade. It is rotated by means of a regulating wheel and ground by the grinding wheel. In through-feed centreless grinding, the regulating wheel revolving at a much lower surface speed than grinding wheel controls the rotation and longitudinal motion of the work piece. The regulating wheel is kept slightly inclined to the axis of the grinding wheel and the work piece is fed longitudinally as shown in .

Centreless external grinding machine

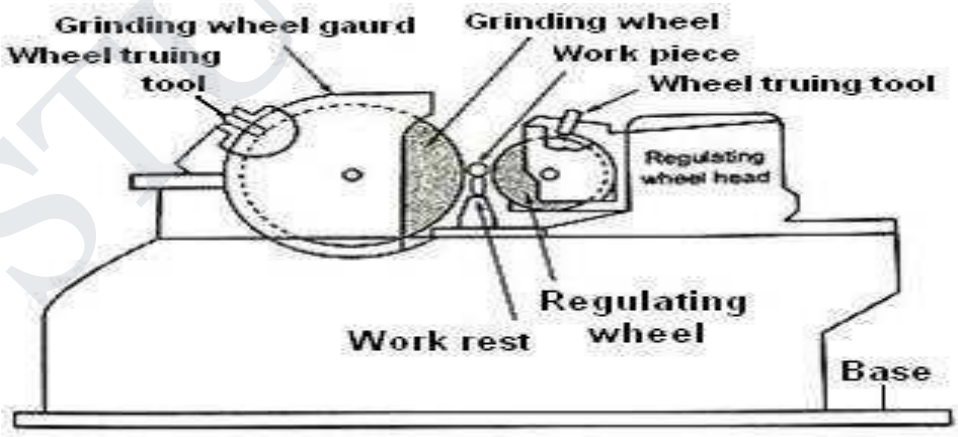

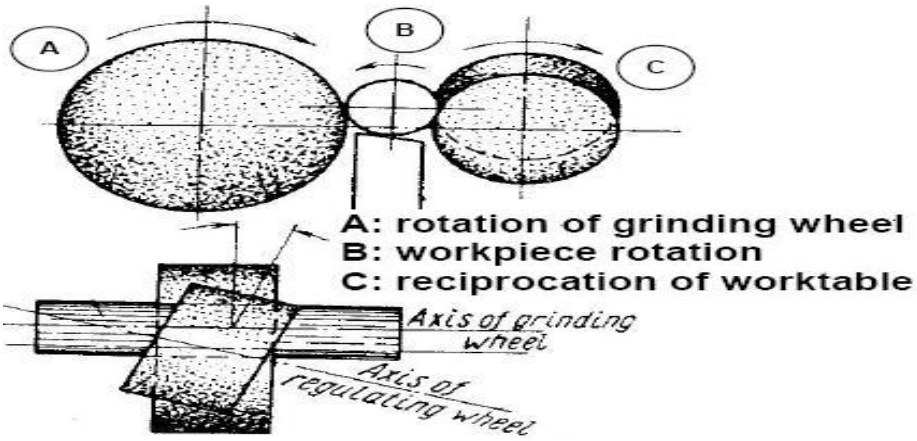

Centreless through feed grinding machine.

Parts with variable diameter can be ground by Centreless infeed grinding as shown in Fig. 4.32 (a). The operation is similar to plunge grinding with cylindrical grinder. End feed grinding shown in Fig. 4.32 (b) is used for work piece with tapered surface. The grinding wheel or the regulating wheel or both require to be correctly profiled to get the required taper on the work piece.

Centreless (a) infeed and (b) end feed grinding machine

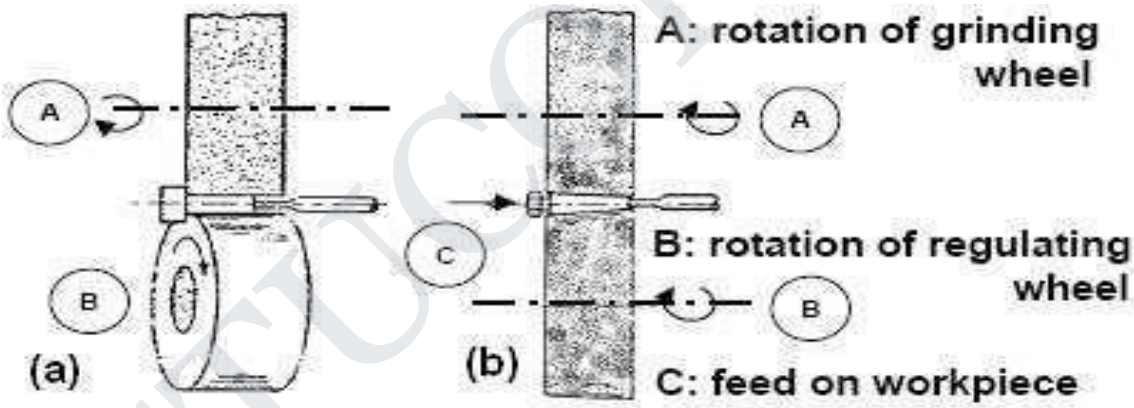

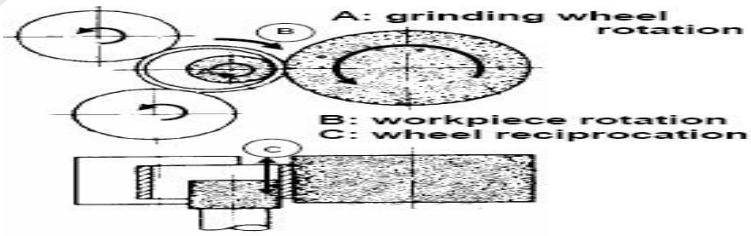

Internal centreless grinding machine.

6. Explain the Finishing Process.

Finishing Process:

- their objective is to achieve superior surface finish up to mirror-like finishing and very close dimensional precision
- The finishing operations are assigned as the last operations in the single part production cycle usually after the conventional or abrasive machining operations, but also after net shape processes such as powder metallurgy, cold flashless forging, etc.

List of Finishing Process:

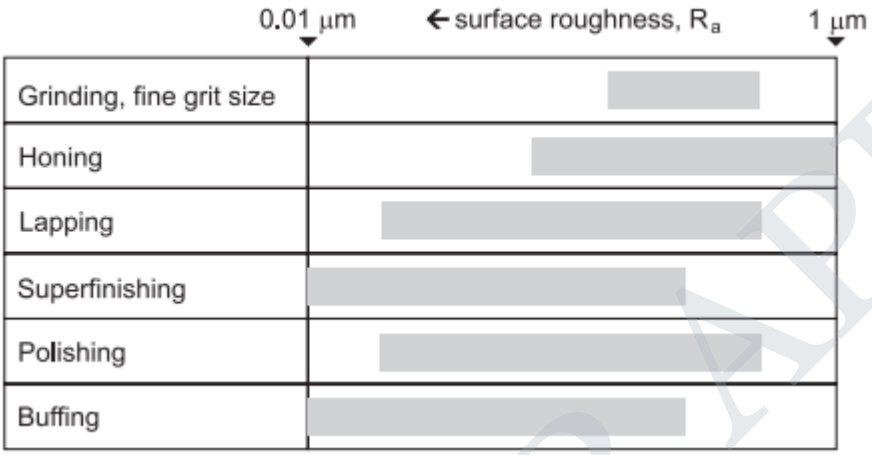

Honing:

Honing is a finishing process performed by a honing tool, which contains a set of three to a dozen and more bonded abrasive sticks. The sticks are equally spaced about the periphery of the honing tool. They are held against the work surface with controlled light pressure, usually exercised by small springs. The honing tool is given a complex rotational and oscillatory axial motion, which combine to produce a crosshatched lay pattern of very low surface roughness.

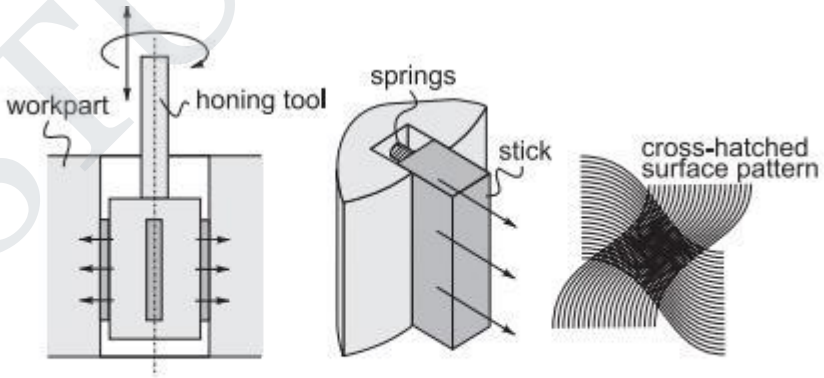

Schematics of honing process showing the honing tool, how the abrasive sticks are pressed against the work surface by springs, and the resulting surface pattern.

In addition to the surface finish of about 0.1 µm, honing produces a characteristic crosshatched surface that tends to retain lubrication during operation of the component, thus contributing to its function and service life. A cutting fluid must be used in honing to cool and lubricate the tool and to help remove the chips.

A common application of honing is to finish the holes. Typical examples include bores of internal combustion engines, bearings, hydraulic cylinders, and gun barrels.

Lapping:

In lapping, instead of a bonded abrasive tool, oil-based fluid suspension of very small free abrasive grains (aluminum oxide and silicon carbide, with typical grit sizes between 300 and 600) called a lapping compound is applied between the workpiece and the lapping tool.

The lapping tool is called a lap, which is made of soft materials like copper, lead or wood. The lap has the reverse of the desired shape of the workpart. To accomplish the process, the lap is pressed against the work and moved back and forth over the surface in a figure-eight or other motion pattern, subjecting all portions of the surface to the same action. Lapping is sometimes performed by hand, but lapping machines accomplish the process with greater consistency and efficiency.

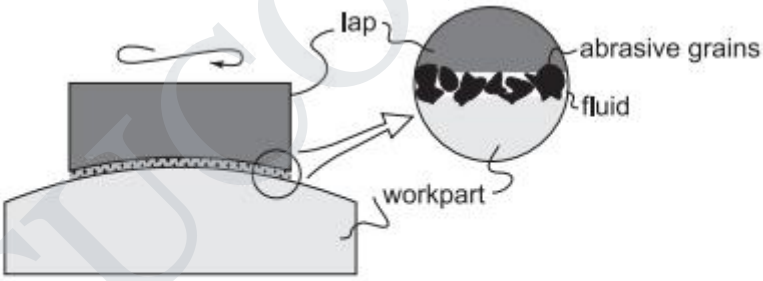

Schematics of lapping process showing the lap and the cutting action of suspended abrasive particles.

The cutting mechanism in lapping is that the abrasives become embedded in the lap surface, and the cutting action is very similar to grinding, but a concurrent cutting action of the free abrasive particles in the fluid cannot be excluded.

Lapping is used lo produce optical lenses, metallic bearing surfaces, gages, and other parts requiring very good finishes and extreme accuracy.

Superfinishing:

Superfinishing is a finishing operation similar to honing, but it involves the use of a single abrasive stick. The reciprocating motion of the stick is performed at higher frequency and smaller amplitudes. Also, the grit size and pressures applied on the abrasive stick are smaller. A cutting fluid is used to cool the work surface and wash away chips.

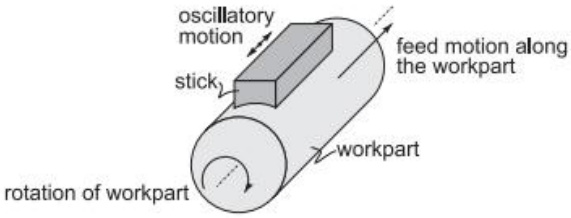

Schematics of the superfinishig process.

In superfinishing, the cutting action terminates by itself when a lubricant film is built up between the tool and work surface. Thus, superfinishing is capable only of improving the surface finish but not dimensional accuracy.The result of these operating conditions is mirror like finishes with surface roughness values around 0.01 µm. Superfinishing can be used to finish flat and external cylindrical surfaces.

Polishing and buffing:

Polishing is a finishing operation to improve the surface finish by means of a polishing wheel made of fabrics or leather and rotating at high speed. The abrasive grains are glued to the outside periphery of the polishing wheel. Polishing operations are often accomplished manually.

Buffing is a finishing operation similar to polishing, in which abrasive grains are not glued to the wheel but are contained in a buffing compound that is pressed into the outside surface of the buffing wheel while it rotates. As in polishing, the abrasive particles must be periodically replenished. As in polishing, buffing is usually done manually, although machines have been designed to perform the process automatically.

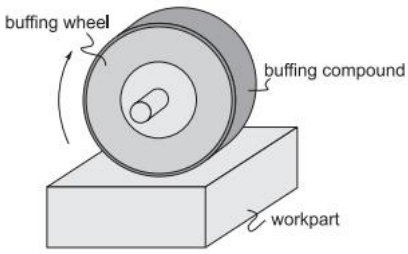

Schematics of the buffing operation.

Polishing is used to remove scratches and burrs and to smooth rough surfaces while butting is used to provide attractive surfaces with high luster.

7. Explain the working principle and operation of horizontal broaching machine.

Pull type horizontal internal broaching machine

This machine has a box type bed. The length of bed is twice the length of shows the pull type horizontal internal broaching machine. This machine has a box type bed. The length of bed is twice the length of stroke. Most of the modern horizontal broaching machines are provided with hydraulic or electric drive. It is housed in the bed. The job is located in the adopter. The adopter is fitted in the front vertical face of the machine. The small end of the broach is inserted through the hole of the job and connected to the pulling head.

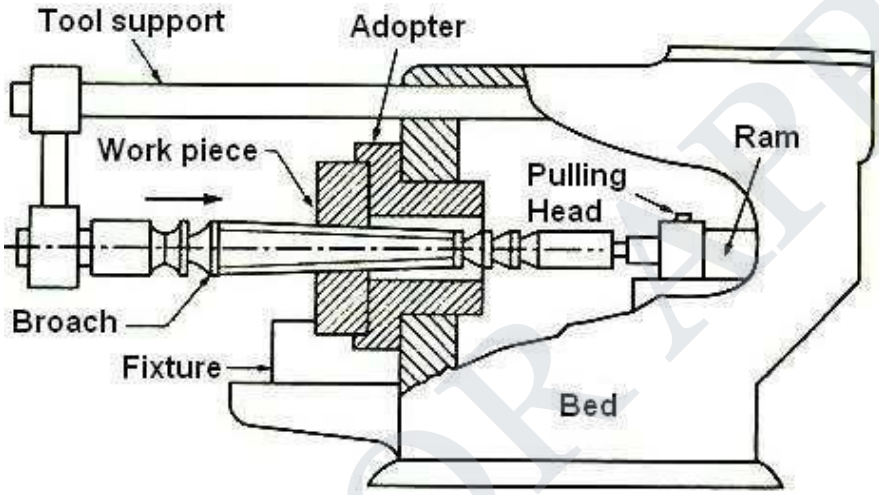

The pulling head is mounted in the front end of the ram. The ram is connected to the hydraulic drive mechanism. The rear end of the broach is supported by a guide. The broach is moved along the guide ways. It is used for small and medium sized works. It is used for machining keyways, splines, serrations, internal gears, etc.

Horizontal broaching machines are the most versatile in application and performance and hence are most widely employed for various types of production. These are used for internal broaching but external broaching work is also possible. The horizontal broaching machines are usually hydraulically driven and occupy large floor space.

8. Discuss the types of broaches.

Internal broaching and broaches

Internal broaching tools are used to enlarge and finish various contours in through holes preformed by casting, forging, rolling, drilling, punching etc. Internal broaching tools are mostly pull type but may be push type also for lighter work. Pull type internal broaching tools are generally provided with a set of roughing teeth followed by few semi-finishing teeth and then some finishing teeth which may also include a few burnishing teeth at the end. The wide range of internal broaching tools and their applications include:

- Through holes of different form and dimensions.
- Non-circular holes and internal slots.
- Internal keyway and splines.
- Teeth of straight and helical fluted internal spur gears.

External broaching and broaches

External surface broaching competes with milling, shaping and planing and, wherever feasible, outperforms those processes in respect of productivity and product quality. External broaching tools may be both pull and push type. Major applications of external broaching are:

- Un-obstructed outside surfacing; flat, peripheral and contour surfaces.
- Grooves, slots, keyways etc. on through outer surfaces of objects.
- External splines of different forms.
- Teeth of external spur gears or gear sectors .

External broaching tools are often made in segments which are clamped in fixtures for operation

Pull type and push type broaches

During operation a pull type broach is subjected to tensile force, which helps in maintaining alignment and prevents buckling. Pull type broaches are generally made as a long single piece and are more widely used, for internal broaching in particular. Push type broaches are essentially shorter in length (to avoid buckling) and may be made in segments. Push type broaches are generally used for external broaching, preferably, requiring light cuts and small depth of material removal.

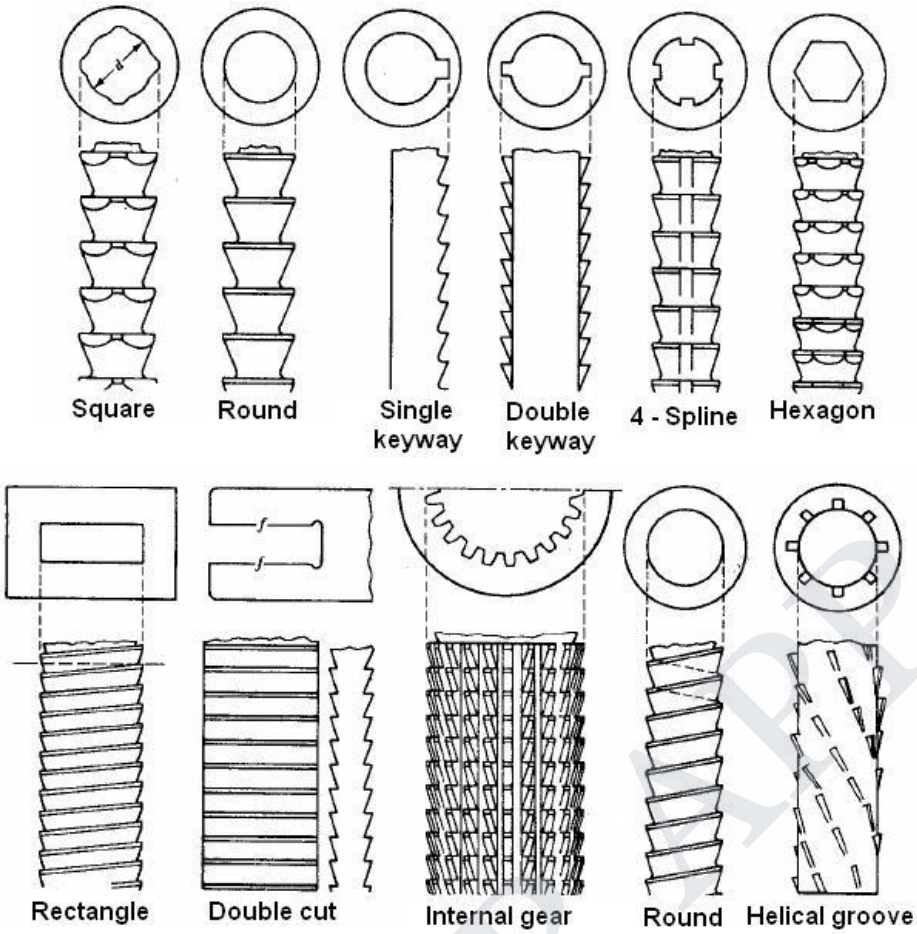

Broaches

Department of Mechanical Engineering

Important questions for university exam

ME8451 Manufacturing Technology II

UNIT - 5

1. Write briefly about open, closed loop and adaptive control systems in CNC machine tool.

CNC machine tools classified based control methods of cutting tool and workpiece.

Classification :

1. Open Loop System
2. Closed Loop System
3. Adaptive control system

1. Open Loop control system

- No reference for the result
- Digital type and using stepping motors for driving slide
- Stepping motor-convert digital electrical signal –proportional moment
- No Checking of output
- Accuracy is least considered

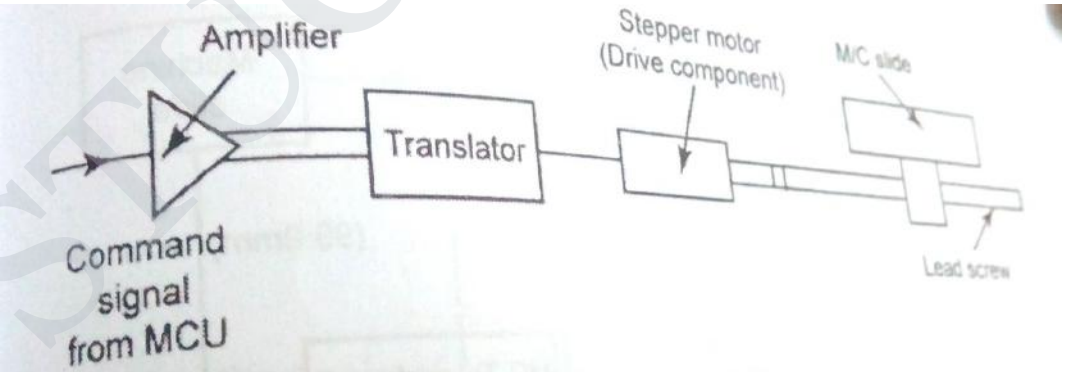

Figure 5.5 Open loop machine slide control

2. Closed Loop Control System:

- Feedback system is used to close the loop
- Position transducer –feedback device
- One axis of motion
- Definite reference for the result
- Checking of output with desired goal
- Accuracy is more importance

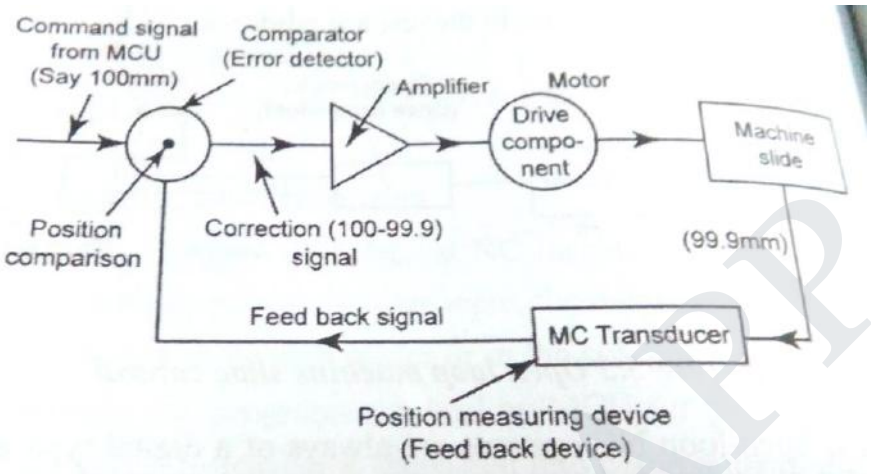

Figure 5.6 Closed loop positioning control

3. Adaptive Control System:

- Time varying variables and adaptive controller are used.
- feedback rate and speed can be measured

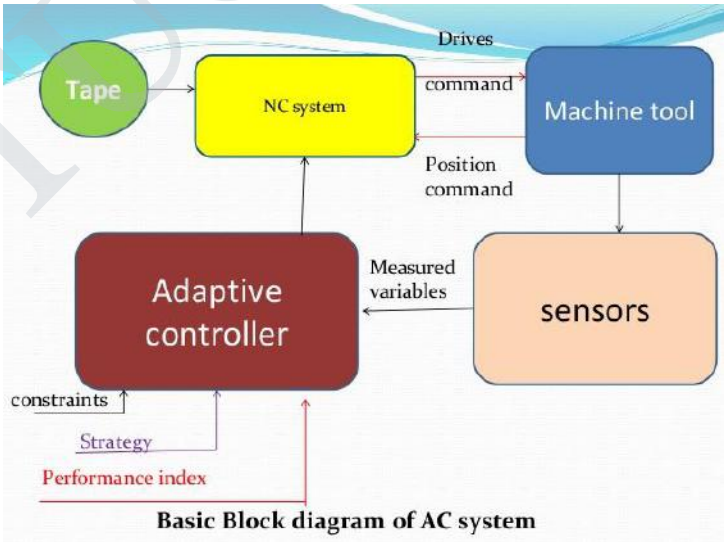

Basic Block diagram of AC system

2. Explain the main components of the NC system.

Numerical control system

- Numerical control (NC)
- NC is the automation of machine tools that are operated by precisely programmed commands encoded on a storage medium

NC system

- A system in which actions are controlled by direct insertion of numerical data at some point is known as NC system

Basic components

1. Software
2. MCU
3. Machine tool

Software

- Set of instructions, languages, punched cards and other information processing items
- Sole element to control the sequence of movement
- It feeds code to Machine control unit (MCU)

MCU (machine control unit)

- Read NC program and translates it for mechanical action
- Converts tape program to desired command signals

Elements of MCU

1. Input unit (punched tapes, cards and magnetic tape)
2. Memory (temporary memory called as buffer)
3. Processor (coordinates and controls the functions)
4. Output channels (converts stored data into actuation signal and supply it to output channels)
5. Control panel (switches, indicators and manual data)

Machine tool

- Consists of worktable, cutting tools, jigs and fixtures, motor for driving spindle
- Operations such as milling, boring, drilling and reaming can be done

Working of NC system

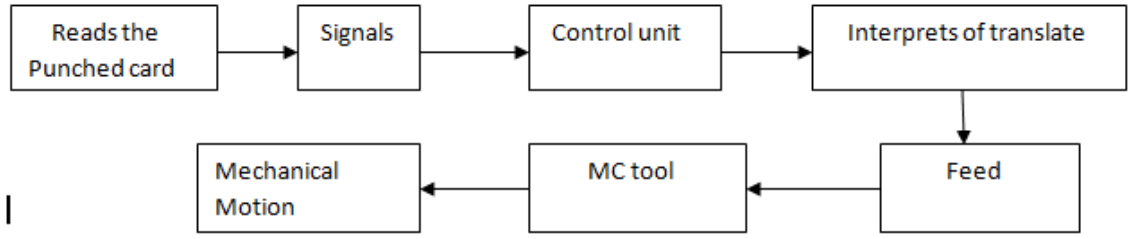

Advantages of NC machine

- High accuracy, less production cost, absence of human error
- Tooling cost is reduced, machine utilization is better

Disadvantage of NC Machine

- Initial cost is high, need of highly knowledgeable person
- Flexibility is less for fixed cycle of operations
-

3. Explain the fundamentals in CNC programming.

PART PROGRAM:

- The part program is a set of instruction proposed to get the machined part starting with the desired blank and NC machine tool
- Specifying dimensional and non-dimensional data and it is written in specific format
- This format is known as NC block

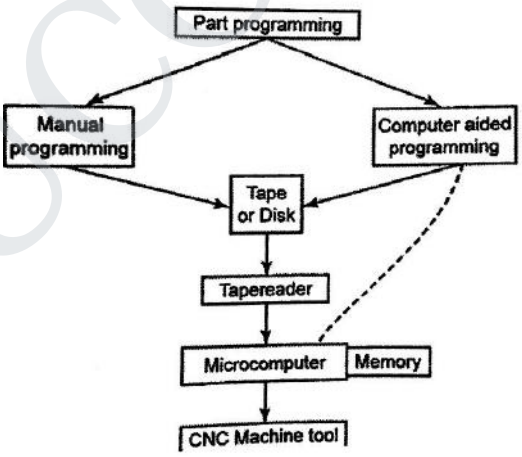

Figure 5.25 Layout of part programme procedure

METHODS OF CREATING PART PROGRAMMING:

- Manual part programming
- Computer assisted part programming (CAD/CAM based programming system)
- Manual data input
- Computer automated part programming

CNC MANUAL PART PROGRAMMING:

- To prepare a part program using a manual method
- The programmer writes the machining instruction on a special format called part programming manuscript

Divided into two categories

- Point to point jobs
- Contouring jobs

DATA REQUIRED FOR PART PROGRAMMING:

- Job dimension\Workpiece
- Work holding (damping and in chucking)
- Feed\Cutting speed
- Finished dimension with tolerance
- Sequence of operation
- Types of tools
- Mounting of tools
- For turning operation the two axes are required to command the movement of the tool relative to the rotating workpiece

ZERO POINTS AND REFERENCE POINTS IN PART PROGRAMMING:

- Origin is considered as zero point.
- They are fixed zero and floating zero.

Fixed zero:the origin is always located at the southwest corner.

Floating zero- The machine operator sets zero point at any position on the machine table.

- N C related Dimensioning in part programming

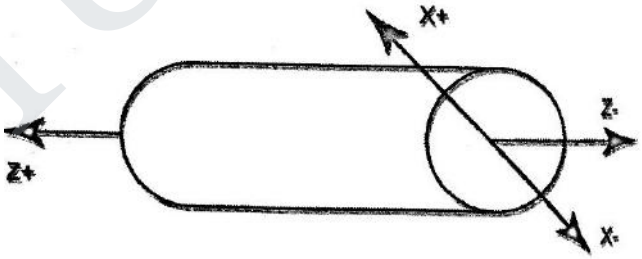

Figure 5.27 Machine tool axis system

POSITIONING:

Absolute positioning

- The tool location are always defined in relation to zero point.
- E.g.: G90 code is used in a part program to represent absolute mode.

Incremental positioning

- The next tool location must be defined with reference to the previous tool location,
- G91 code is used in part program to represent incremental mode.

Two types of unit system for making dimension.

- Inch system
- Metric System.
- F indicates feed given
- S indicates Speed of work or spindle.
- M denote miscellaneous function.

PREPARATORY FUNCTION (G) IN PART PROGRAMMING:

- Preparatory command which prepare the machine or tool for different modes of movement positioning contouring
- The thread cutting and also precede the dimension word
- E.g.:*G00-Point to point positioning
- G01-Linear interpolation
- G02-Circular interpolation clockwise

MISCELLANEOUS FUNCTION (M) IN PART PROGRAMMING:

- The function not relating the dimensional movement of the machine but it denotes the auxiliary or switching information is called as miscellaneous function
- E.g:M00-Programmed stop

4. Explain the various drives used in CNC

CNC DRIVE SYSTEM

1. Cutting spindle

- It is a primitive system of transmission
- Output of engine
- Direct contact with tired
- With provides connections between cutting tool and spindle of the machine tool
- Variety of cutting operation

Requirement of spindle for cnc machines

- High stiffness of both static and dynamic
- Running accuracy
- High speed operation

TYPICAL SPINDLE TOOLING FOR VARIOUS MACHINING

1. Drill chuck
2. Collet chuck
3. Morse tapper adaptors
4. Boring bars
5. Boring heads

Advantages

- It is simple driven
- No lubricants used
- It needs minimum maintenance only

Disadvatages

- More stress must be put on spindle
- To maintain an efficient contact
- Spindle cause excessive wear

2. Spindle Heads

TYPES

1. Inclinable head
2. Robot head
3. Horizontal spindle head

4. Vertical spindle head
5. Universal head

3.FEED DRIVE

Requirement of feed drive

- Constant torque for overcoming frictional and working force
- Infinitely variable drive speed
- Maximum speed upto 3000 rpm
- Low armature or rotor inertia
- Permanent magnet construction

FEED DRIVES ARE USED IN CNC MACHINE TOOL

1. DC servo motor
2. Brushless dc servo motor
3. Stepper motor
4. Linear motor
5. AC servo motor

4.SWARF AND COOLANT CONTROL

- Coolant will be mixed with swarf and the mixture will be deposited on the tray
- Removed of scarp is also difficult
- Separation of coolant and swarf is used of magnets
- Using filters the coolant separated

5. Explain the main components of CNC machine.

CNC:

- Computer Numerical Control
- Utilizes stored program
- Mini or microcomputer based controller unit

Major Elements:

1. Hardware: - Microprocessor
2. Software : - Programming Language
3. Information : Programme

A typical CNC system consists of the following six elements

- Part program
- Program input device
- Machine control unit
- Drive system
- Machine tool
- Feedback system

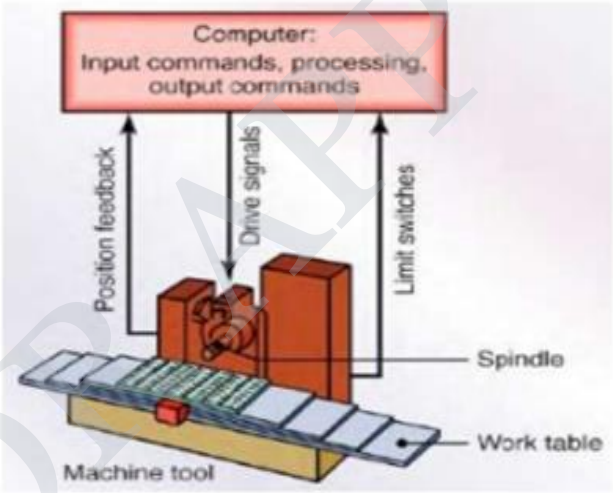

Working:

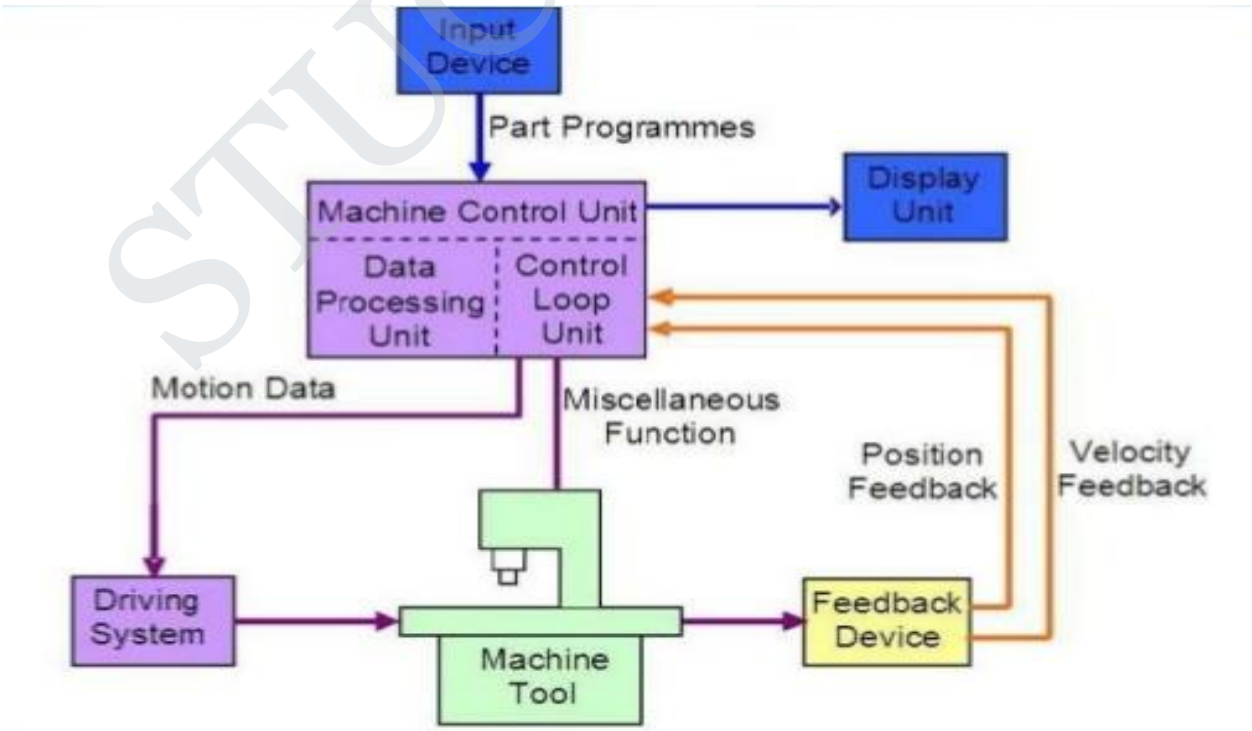

6. Explain the special features in CNC machine tools.

Special Features:

1. **CNC drive system**
   - Spindle drive system
2. **Feed Drive**
   - AC, DC, stepper, Hydraulic, Pneumatic
3. **Slide Movement element**
   - Ball screws, Ball bearing
4. **Swarf and coolant control**
   - swarf – micro particles – magnet
5. **Automatic Tool changer**

   The tools are contained in a storage unit that is integrated with the machine tool. When a cutter needs to be changed, the tool drum rotates to the proper position and an automatic tool changer (ATC) operating under program control, exchanges the tool in the spindle for the tool in the tool storage unit. Capacities of tool storage unit commonly range from 16 to 80 cutting tools.
6. **Automatic Pallet changer**

   Machining centers are often equipped with two (or more) separate pallets that can be presented to the cutting tool using an automatic pallet changer. While machining is performed with one pallet in position at the machine, the other pallet is in a safe location away from the spindle. In this location, the operator can unload the finished part and then fixture the raw work part for next cycle.
7. **Automatic work part positioner:**

   Many horizontal and vertical machining centers have the capability to orient the work part relative to the spindle. This is accomplished by means of a rotary table on which work part is fixtured. The table can be oriented at any angle about a vertical axis to permit the cutting tool to access almost the entire surface of the part in a single setup.

7. What are the requirements of slide ways?

The requirements of a good slideway system:

A good slideway system must possess;

- Low coefficient of friction at varying slide velocities.
- Minimum difference between static and dynamic friction co efficient - positive slope for friction
  - velocity characteristics.
- Low rate of wear.
- High stiffness at the sliding joints.
- Sufficient damping.

Plastic coated slideways

In this slideways a plastic or non-metallic inserts are used. These inserts are bonded to the underside of the sliding members. They can be of thermoplastics (Trucite-B) or thermosetting (SKC-3, moglice) types. These inserts/ composites are made of two or more materials in which one reduces co efficient of friction. The other increases strength, war resistance and load bearing capacity. They also have self lubricating property; have a soft matrix for taking up dust or particles and to eliminate scoring. Another advantage is the ease with which a worn out strip can be replaced without the need for any scraping or machining of bed ways.

Linear motion bearings

Rolling element when applied to reciprocating motion has following advantages.

- With rolling element linear motion bearings there is little difference between dynamic friction and static friction. This means that is possible to reduce the drive power to be used and also makes the drive equipment more compact. Further machine weight, overall costs and maintenance cost can be reduced.
- Even though internal clearance is reduced to zero to absorb machine vibration and shock, smooth motion is obtained.
- Stick slip problem is completely eliminated.
- Lubrication of metal to metal contact slideways is difficult at low speed. So a high degree of wear results in conventional slides. But a rolling element slide requires only small quantities of lubricant, shows little wear and lasts long.

Construction

Linear motion guide system consists of a bearing block and rail. Two race ways are provided on one side of the bearing block where two rows of rolls are retained and caused to recirculate by means of retainer and two end plates. The unit is constructed in such a manner that each of the rows of balls rolling over the rail comes into contact with the race way at an angle of 45°.

The race is in line contact rather than the conventional point contact. Thus the ball has 13 more times allowable load carrying capacity than conventional point contact system. This system is capable of withstanding equal load in any direction.

8. Explain the machining centre with neat sketch.

Machining Centre:

The machining centre, developed in the late 50's is a machine tool capable of multiple machining operations on a work part in one setup under NC program control.

Classification:

1. Vertical
2. Horizontal
3. Universal

Vertical Machining Centre:

A vertical machining centre has its spindle on a vertical axis relative to the work table. A vertical machining centre (VMC) is typically used for flat work that requires tool access from top. E.g. mould and die cavities, Large components of aircraft.

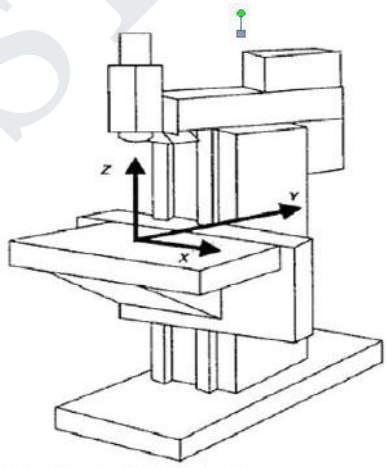

Fig 2 : Vertical Machining Centre

Horizontal Machining Centre:

A horizontal machining centre (HMC) is used for cube shaped parts where tool access can be best achieved on the sides of the machine spindle.

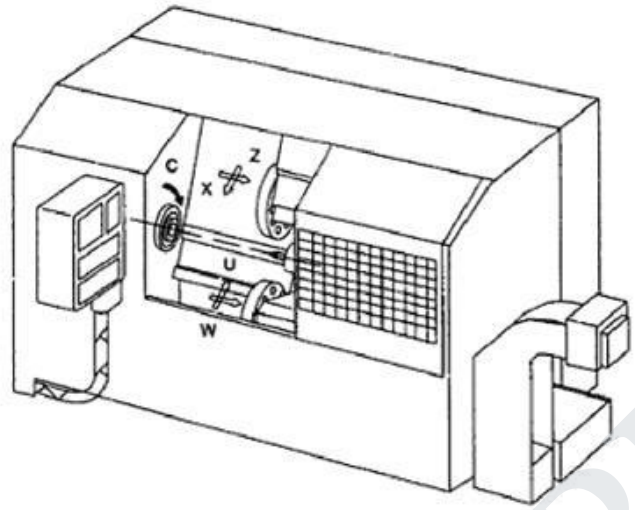

Fig. 3 : Horizontal Machining Centre

Universal Machining Centre:

A universal machining centre (UMC) has a work head that swivels its spindle axis to any angle between horizontal and vertical making this a very flexible machine tool. E.g.: Aerofoil shapes, Curvilinear geometries.

9. Explain briefly about Micro machining and its types.

Micro Machining:

- Machining in micron range.

Types:

1. Bulk Micromachining
2. Surface Micromachining

Bulk Micromachining:

- Structures are created inside the substrate
- Process to produce micromachinery or MEMS
- Uses a series of thin film deposition and selective etching
- Selectively etching inside a substrate

Stages:

- Dopant Diffusion
- Masking
- Anisotropic etching
- Wafer bonding

Working:

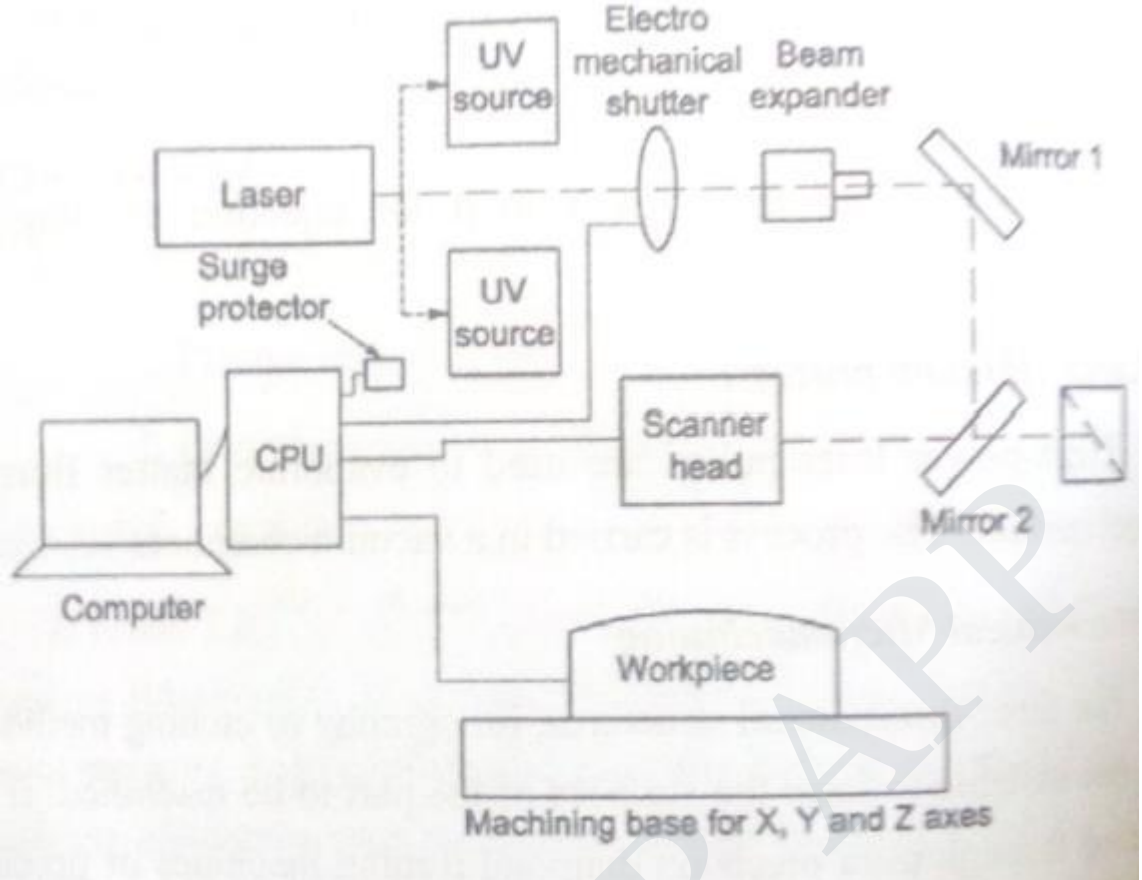

Figure 5.42 Bulk micromachining

Surafce Micromachining:

- Structures are created on top of a substrate
- Silicon substrate – selectively etched to produce structures

Stages:

1. Deposition of passivation layer
2. Design and pattern the sacrificial layer
3. Design and pattern the structural layer
4. Remove the sacrificial layer

10. Explain briefly about Wafer Machining?

Wafer Machining:

- LED industry
- To improve thickness control
- Preparation similar to micromachining

Stages:

1. Slicing
2. Lapping
3. Etching
4. Polishing

- **The Silicon Crystal is Sliced by Using a Diamond-Tipped Saw into Thin Wafers**
- **Sorted by Thickness**
- **Damaged Wafers Removed During Lapping**
- **Etch Wafers in Chemical to Remove any Remaining Crystal Damage**
- **Polishing Smoothes Uneven Surface Left by Sawing Process**

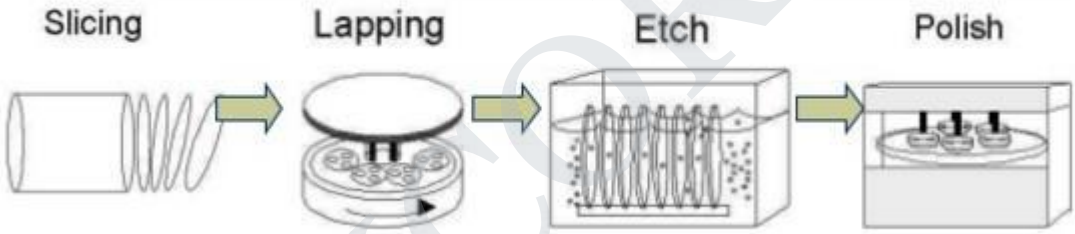

Working:

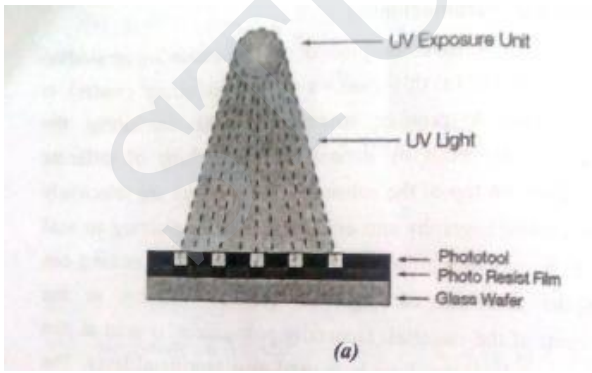

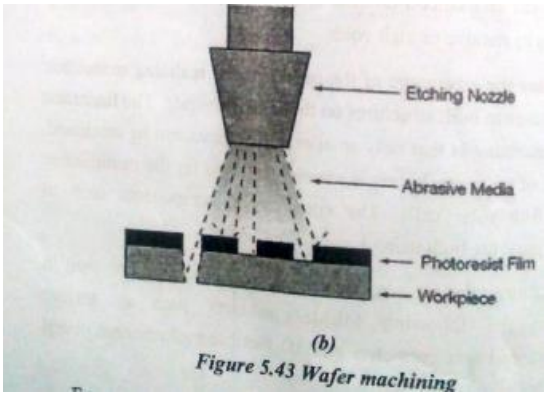

Figure 5.43 Wafer machining

11. Compare Conventional , NC and CNC machining.

S. No	Conventional system	NC system	CNC system
1.	It requires more manual works.	It requires less manual works.	It requires less manual works.
2.	Skilled labour is needed.	Less skill is enough.	Less skill is enough.
3.	Less accuracy is obtained.	More accuracy is obtained.	More accuracy is obtained.
4.	The system is less flexible.	The system is medium flexible.	The system is more flexible.
5.	Part programming is not required.	Part programming is used.	Re - programming is easy.
6.	Machining is done every time.	Programming and punched tape are read each time.	Only one time, the tape is read and storing is possible.
7.	Simulation cannot be done.	Simulation is also possible.	Simulation is also possible.
8.	It is more suitable for less production rate.	It is more suitable in medium production rate.	More suitable for mass production.

Agni College of Technology
ISO 9001:2008 Institution
Imparting Knowledge. Inculcating values

Department of Mechanical Engineering

Important questions for university exam

ME8451 Manufacturing Technology II

Problems

1. Problems on Cutting Force calculation
2. Problems on chip thickness and shear plane calculation
3. Problems on Machining time calculation
4. Problems on Tool Life calculation
5. CNC Program

Problems on Cutting Force calculation

In an orthogonal cutting process, the following observations were made

Depth of cut = 0.25mm

Chip thickness ratio = 0.45

Width of cut = 4mm

Cutting velocity = 40m/min

Cutting force component parallel to cutting velocity vector =1150N

Cutting force component normal to cutting velocity vector =140N

Rake angle = 18°

Determine the resultant cutting force, power of cutting, shear plane angle, friction angle and force component parallel to shear plane.

[I.E.S – 92]

Given data:

$t_1 = 0.25mm$

$r = 0.45mm$

$b = 4mm$

$V = 40m/min$

$F_z = 1150N$

$F_x = 140N$

$\alpha = 18°$

☺ *Solution:*

Resultant cutting forces, $F = \sqrt{F_z^2 + F_x^2}$

$= \sqrt{1150^2 + 140^2}$

$F = \mathbf{1158.49N}$

Power of cutting force, $P = F_x \times V$

$= 1150 \times 40$

$= \mathbf{46000Nm/min}$

Shear angle, $\beta = \tan^{-1}\left[\frac{r\cos\alpha}{1 - r\sin\alpha}\right]$

$\beta = \tan^{-1}\left[\frac{0.45 \times \cos 18}{1 - 0.45 \times \sin 18}\right]$

$\beta = \mathbf{26.5°}$

Friction angle, $\gamma = \tan^{-1}\left[\frac{F_x + F_z \tan\alpha}{F_z - F_x \tan\alpha}\right]$

$\gamma = \tan^{-1}\left[\frac{140 + 1150 \tan 18}{1150 - 140 \tan 18}\right]$

$\gamma = \mathbf{25°}$

Shear force, $F_s = F_z \cos\beta - F_x \sin\beta$

$= 1150 \cos 26.5° - 140$

$F_s = \mathbf{966.7N}$

Problems on chip thickness and shear plane calculation

A mild steel work piece of 60mm diameter is to be turned with an orthogonal tool to a feed rate of 0.92 mm/revolution and at 75rpm. If the chip thickness is 2mm, determine the chip thickness ratio and length of chip removed in one minute. Assume a condition of continuous chip.

Given data:

$D = 60mm$

$t_1 = 0.92mm/rev$

$t_2 = 2mm$

$N = 75rpm$

☺ ***Solution:***

$$\text{Chip thickness ratio, } r = \frac{t_1}{t_2}$$

$$= \frac{0.92}{2}$$

$$= \mathbf{0.46mm} \quad \textbf{Ans.}$$

$$\text{Length of chip before cutting, } l_1 = \pi D N$$

$$= \pi \times 60 \times 75$$

$$= 14137.16mm$$

$$\text{Chip thickness ratio, } r = \frac{l_2}{l_1}$$

$$0.46 = \frac{l_2}{1413716}$$

$$l_2 = 6503mm$$

During an orthogonal cutting a chip length o obtained from an uncut chip length of 350mm. The c 22° rake angles and a depth of cut is 0.8mm. Deter plane angle and chip thickness.

Given data:

$l_2 = 160mm$

$l_1 = 350mm$

$\alpha = 22°$

$t_1 = 0.8mm$

☺ ***Solution:***

Chip thickness ratio, $r = \frac{l_2}{l_1} = \frac{160}{350} = 0.457$

Shear plane angle $\beta = \tan^{-1}\left[\frac{r\cos\alpha}{1 - r\sin\alpha}\right]$

$= \tan^{-1}\left[\frac{0.457 \times \cos}{1 - 0.457 \times \sin}\right]$

$\beta = 27°$

We know that the chip thickness

$r = \frac{t_1}{t_2}$

$0.457 = \frac{0.8}{t_2}$

$t_2 = 1.75mm$ Ans.

Problems on Machining time calculation

A blank 180 mm long and 70 mm diameter is to be machined in a lathe to 175 mm long and 60 mm diameter. The workpiece rotates at 450 rpm, the feed is 0.3 mm/rev and the maximum depth of cut is 2 mm. For turning operation; the approach plus over-travel distance is 6 mm. Assuming that the facing operation is done after the turning. Calculate the machining time. [May'12]

Given data:

Length of travel, $l = 180\ mm$

Diameter before machining, $d_1 = 70\ mm$

Diameter after machining, $d_2 = 60\ mm$

Maximum depth of cut $= 2\ mm$

Feed $= 0.3\ mm/rev$

Approach, $s = 6\ mm$

(i) For turning operation:

Total length of travel, $L = l + s$

$= 180 + 6 = 186\ mm$

Total depth of cut, $t_d = (70 - 60)/2 = 5\ mm$

Number of passes, $n_p =$ Total depth of cut / Maximum depth of cut

$= 5/2 = 2.5$

$= 3$ passes (Approx.)

$$\text{Turning time, } T = \frac{n_p L}{f \times N}$$

$$= \frac{3 \times 186}{0.3 \times 450}$$

$$= 4.13\ min \quad \text{Ans.}$$

(ii) *Facing operation:*

Total length of travel, $L = d_2/2 = 60/2 = 30$ mm

Total depth of cut, $t_d = (180 - 175) = 5$

Number of passes, $n_p = 5/2$

$= 2.5$, rounded to 3 passes

$= 5/2 = 2.5 = 3$ passes (Ans)

Facing time, $T = \dfrac{n_p L}{f \times N}$

$= \dfrac{3 \times 30}{0.3 \times 450} = 0.66$ min (Ans)

Problems on Tool Life calculation

During a tool life-cutting test on HSS tool material, the following data were recorded.

Tool life	*Cutting speed*
40*min*	25*m/min*
5*min*	75*m/min*

Calculate the values of n and C of Taylor's equation.

Given data:

$T_1 = 40min$

$V_1 = 25m/min$

$T_2 = 5min$

$V_2 = 75m/min$

☺ *Solution:*

By Taylor's equation

$$VT^n = C$$

$$V_1 T_1^n = V_2 T_2^n$$

$$25 \times 40^n = 75 \times 5^n$$

$$\left(\frac{40}{5}\right)^n = \frac{75}{25}$$

$$n = \mathbf{0.528}$$

$$V_1 T_1^n = C$$

$$C = 25 \times 40^{0.528} = 175.52$$

A carbide tool gave a tool life of 200min at 20m/min and 28min at 80m/min. Compute the

(i) tool life equation and

(ii) cutting speed for minimum life.

Given data:

$T_1 = 200min$

$V_1 = 20m/min$

$T_2 = 28min$

$V_2 = 80m/min$

☺ ***Solution:***

Taylor's equation is given by

$$VT^n = C$$

$$20 \times 200^n = 80 \times 28^n$$

$$\left(\frac{200}{28}\right)^n = \frac{80}{20} = 4$$

$$n \log\left(\frac{200}{28}\right) = \log 4$$

$$n = 0.705$$

$$20 \times 200^{0.705} = C$$

$$C = 838$$

∴ Tool life equation, $VT^{0.705} = \mathbf{838}$ **Ans.**

For giving minimum tool life, say 1 min

$$V \times (1)^{0.705} = C = 838$$

$$V = \mathbf{838 m/min}$$ **Ans.**

A carbide-cutting tool lasted for 150min [illegible] M.S. at 35m/min. If a similar tool is used at 30% [illegible] machine MS. Calculate the tool life. Also calculate [illegible] cutting speed if the tool is to machine for 2 hour [illegible] in Taylor's tool life equation $VT^n = C$.

Given data:

$T_1 = 150min$

$V_1 = 35m/min$

$T_2 = 2hrs = 120min$

$n = 0.3$

☺ *Solution:*

$$35 \times (150)^{0.3} = 157 = C$$

When speed is increased by 30%

$$V_2 = \frac{130}{100} \times 35 = 45.5$$

$$V_2 T_2^n = C$$

$$45.5 \times (T_2)^{0.3} = 157$$

$$T_2 = 62.08min$$

It tool life is 120min

$$T_3 = 120min$$

$$V \times (120)^{0.3} = C = 157$$

$$V = 37.314m/min$$

(i) With a neat sketch, explain the working of ATC. (6)

(ii) A 110 mm long cylindrical rod of Φ75 mm is to be turned into a component as shown in Fig-1, using a CNC lathe. Write a CNC program for manufacturing this component. (10)

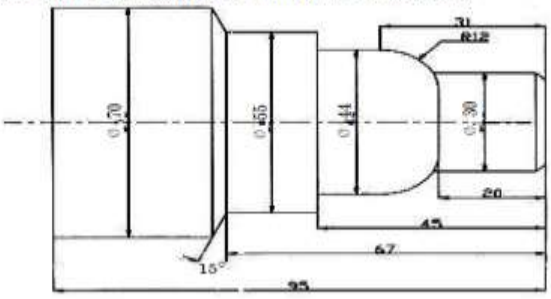

(All dimensions are in mm)
Fig. 1

CNC Program:

N01	#BILLET Z110 X75;	
	G21 G98;	G21 – Metric Programming, G98 – Feed per Minute
	M06 T01;	M06 – Tool change
	M03 S1500	M03 – Spindle clockwise rotation
N02	G00 X80 Z0;	
N03	G94 X0 Z-5;	G94 – Canned facing cycle
N04	Z-10;	
N05	Z-15;	
N06	G00 X75 Z-15 F50;	
N07	G90 X75 Z-110 F50;	G90 – Canned Turning cycle
N08	G01 X70 Z-15;	
N09	G90 X70 Z-81;	
N10	X65;	
N11	X60;	
N12	X55;	
N13	G90 X55 Z-60;	
N14	X50;	
N15	X45;	
N16	G90 X44 Z-35;	
N17	X40;	
N18	X35;	
N19	X30;	
N20	G00 X55 Z-81;	
N21	G01 X70 Z-85;	
N22	G00 X30 Z-35;	
N23	G03 X44 Z-46 R12;	
N24	G00 X28 Z-15;	
N25	G01 X30 Z-17;	
N26	M30	

Reg. No. : | | | | | | | | | | | | |

Question Paper Code : 10412

B.E./B.Tech. DEGREE EXAMINATION, MAY/JUNE 2012.

Fourth Semester

Mechanical Engineering

ME 2252/114405/ME 43/10122 ME 403/ME 1252/080120016 — MANUFACTURING TECHNOLOGY — II

(Regulation 2008)

(Common to PTME 2252 Manufacturing Technology II for B.E. (Part-Time) Third Semester Mech. - Regulation 2009)

Time : Three hours | Maximum : 100 marks

Answer ALL questions.

PART A — (10 × 2 = 20 marks)

1. What is meant by built up edge?

2. What are the advantages of diamond tools?

3. What is the purpose of tumbler gear mechanism of a lathe?

4. What are the limitations of centre lathe when compared to automatic lathes?

5. How are shaping machines specified?

6. State two major disadvantages of broaching.

7. Name two artificial abrasive materials.

8. Write any four applications of Abrasive jet machining.

9. What is meant by 'tool magazine' in a CNC machine?

10. What is the function of a subroutine in NC part programming?

PART B — (5 × 16 = 80 marks)

11. (a) (i) In an orthogonal cutting test with a tool of take angle 10°, the following observations were made :

Chip thickness ratio = 0.3

Horizontal component of cutting force = 1290 N

Vertical component of cutting force = 1650 N

From Merchant's theory, calculate the various components of the cutting forces and the coefficient of friction at the chip tool interface. (10)

(ii) Describe the mechanism of chip formation in orthogonal cutting. (6)

Or

(b) (i) Explain the following mechanisms of tool wear :

(1) Attrition

(2) Diffusion. (6)

(ii) A cutting tool when used for machining workpiece at a cutting speed of 50 m/min lasted for 100 minutes. Taking n = 0.26 in the Taylor's tool-life equation, determine (1) the life of the tool for an increase in cutting speed by 25% and (2) the cutting speed to obtain a tool life of 180 minutes. (6)

(iii) A specimen of 100 mm length along the stroke of shaper is machined with a tool with 15° rake angle. The uncut chip thickness is 1.5 mm. If a chip length of 40 mm is obtained during one stroke of machining, find the shear plane angle and the thickness of cut-chip. (4)

12. (a) (i) Sketch the following work-holding devices used in a lathe and state when they are used :

(1) Self centering three-jaw chuck

(2) Collet Chuck

(3) Angle plate with face plate. (3 × 3 = 9)

(ii) A blank 180 mm long and 70 mm diameter is to be machined in a lathe to 175 mm long and 60 mm diameter. The workpiece rotates at 450 r.p.m., the feed is 0.3 mm/rev and the maximum depth of cut is 2 mm. For turning operation, the approach plus over-travel distance is 6 mm. Assuming that the facing operation is done after the turning, calculate the machining time. (7)

Or

(b) (i) Sketch a line-diagram of a single spindle automatic lathe and briefly describe its features. (10)

(ii) Make a comparison of operational and other features of single-spindle and multi-spindle automatic lathes. (6)

13. (a) (i) With the help of a line diagram, describe the parts of a planning machine. Also explain the working of this machine. (8)

(ii) Sketch and briefly explain the following operations performed in milling machine :

(1) Plain milling

(2) Face milling

(3) End milling

(4) Dovetail milling. (8)

Or

(b) Sketch the following operations performed in drilling machine :

(i) Drilling

(ii) Reaming

(iii) Boring

(iv) Counter boring

(v) Counter sinking

(vi) Spot facing

(vii) Tapping

(viii) Trepanning

Add one or two lines of explanation for each. $(8 \times 2 = 16)$

14. (a) (i) Sketch the following :

(1) The set up of wheels and workpiece for a 'through-feed' centreless grinding;

(2) The set up of wheels for 'in-feed' and 'end feed' centreless grinding. Add few lines of brief explanation for the above sketches. (4 + 4)

(ii) Explain the factors to be considered to select a grinding wheel and recommended parameters. (8)

Or

(b) Write short notes on the following finishing processes :

(i) Honing (4)

(ii) Super finishing (3)

(iii) Lapping (3)

(iv) Polishing (3)

(v) Buffing. (3)

15. (a) (i) What are the special requirements of feed drives of CNC machines? What types of motors are used for feed drives? Name also the method of speed control for each type. (8)

(ii) Sketch and explain the following features of CNC machines :

(1) Hydrostatic slideways. (4)

(2) Linear bearings with balls. (4)

Or

(b)

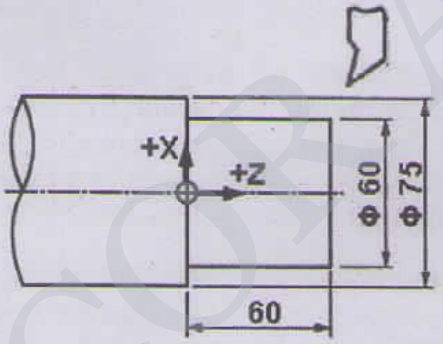

Write a manual part program to turn the component shown on a CNC Lathe from 75 mm bar stock. The following data may be assumed :

(i) There will be two rough turnings and one finish turning. The first cut is with a depth of 3 mm for a length of 58 mm; the second with a depth of 3 mm for a length of 59 mm; and the third with a depth of 1.5 mm for the full length of 60 mm.

(ii) The shoulder of the work-piece is also machined during each cut.

(iii) The spindle speed is 400 rpm and the feed rate is 0.5 mm/rev.

Make a free-hand sketch showing relevant points of tool positions for each of the three turning operations and then write the manual part program. State also what each line of the program does.

Note : If the exact G-codes and M-codes are not known, the student can use his/her own code-numbers, but the function of such codes must be clearly stated. (16)

Reg. No. : | | | | | | | | | | | | |

Question Paper Code : 21563

B.E./B.Tech. DEGREE EXAMINATION, MAY/JUNE 2013.

Fourth Semester

Mechanical Engineering

ME 2252/ME 43/10122 ME 403/ME 1252 A/080120016 – MANUFACTURING TECHNOLOGY – II

(Common to Industrial Engineering, Industrial Engineering and Management and Mechanical and Automation Engineering)

(Regulation 2008/2010)

(Common to PTME 2252 Manufacturing Technology II for B.E. (Part-Time) Third Semester Mechanical Engineering – Regulation 2009)

Time : Three hours Maximum : 100 marks

Answer ALL questions.

PART A — (10 × 2 = 20 marks)

1. Classify the tool wear.

2. When will be the negative rake angles be used?

3. State the various parts mounted on the carriage.

4. What are the types of single spindle automatic lathes?

5. Mention any four shaper specifications.

6. State the uses of planer.

7. How is the grinding wheel designated?

8. List the gear generating process.

9. Mention the advantages of stepping motor.

10. Define subroutine.

PART B — (5 × 16 = 80 marks)

11. (a) The Taylorian tool-life equation for machining C-40 steel with a 18:4:1 H.S.S. cutting tool at a feed of 0.2 mm/min and a depth of cut of 2 mm is given by $VT^n = C$, where n and C are constants. The following V and T observations have been noted.

V_1 m/min	25	35
T_1 min	90	20

Calculate :

(i) n and C. (8)

(ii) Hence recommend the cutting speed for a desired tool life of 60 minutes. (8)

Or

(b) (i) Enumerate the essential requirements of a tool material. (8)

(ii) Discuss the various of cutting fluids. (8)

12. (a) (i) Explain the working principle of turret lathe. (8)

(ii) Discuss any two special attachments on lathes. (8)

Or

(b) (i) Explain any four work holding devices that can be used on a lathe. (8)

(ii) Describe a single spindle automatic lathe. (8)

13. (a) (i) List out the various milling operations. (8)

(ii) Describe the working principle of column and knee type milling machine with a neat sketch. (8)

Or

(b) (i) With a neat sketch, explain the working of a vertical boring machine. (8)

(ii) Explain the various operations performed by a broaching machine. (8)

14. (a) (i) Classify the grinding machines. (4)

(ii) Explain the working principle of centreless grinding process. (12)

Or

(b) (i) Describe two types of lapping operations. (6)

(ii) Explain the principle of operation of gear hobbing process. (10)

15. (a) (i) What are the requirements of slideways? (4)

(ii) Explain the machining centre with a neat sketch. (12)

Or

(b) (i) Classify linear interpolation. (4)

(ii) Explain the part programming procedure with a suitable example. (12)

———————

Reg. No. : | | | | | | | | | | | | |

Question Paper Code : 51630

B.E./B.Tech. DEGREE EXAMINATION, MAY/JUNE 2014.

Fourth Semester

Mechanical Engineering

ME 2252/ME 43/ME 1252 A/080120016/10122 ME 403 — MANUFACTURING TECHNOLOGY — II

(Common to Industrial Engineering, Industrial Engineering and Management and Mechanical and Automation Engineering)

(Regulation 2008/2010)

(Common to PTME 2252 Manufacturing Technology II for B.E. (Part-Time) Third Semester Mechanical Engineering — Regulation 2009)

Time : Three hours Maximum : 100 marks

Answer ALL questions.

PART A — (10 × 2 = 20 marks)

1. What is orthogonal rake system?

2. Why is lubrication not required while machining cast iron?

3. What is a centre gauge that is used in threading?

4. What are programmed automatic lathes?

5. Give the functions of flutes on taps.

6. List some of the materials of broaching tools.

7. What are grinding points? Sketch the various grinding points?

8. What is a tool post grinder?

9. List the main elements of a NC machine tool.

10. What do you understand by 'canned cycle' in manual part programming?

PART B — (5 × 16 = 80 marks)

11. (a) (i) How is metal removed in metal cutting? Explain the process with simple sketch. (10)

(ii) Explain the various methods to be applied while using the cutting fluids during machining. (6)

Or

(b) (i) List the important characteristics of a cutting tool material. (6)

(ii) What is the main function of cutting fluids? and its types. (10)

12. (a) (i) Explain the method of thread cutting using compound slide in a lathe. (10)

(ii) List the type of work holding devices and tool holding devices that are generally used in a lathe. (6)

Or

(b) (i) Explain parallel action and progressive action multispindle automatics. (12)

(ii) Write the procedure of tool layout for automatic screw machine. (4)

13. (a) (i) Explain the hydraulic drive mechanism of a horizontal shaper with neat sketch. (10)

(ii) What is 'deep hole drilling'? List the measures that are taken to avoid drill run off and to drill straight holes. (6)

Or

(b) (i) Explain the indexing mechanism of a dividing head on milling machine. (12)

(ii) Write short note on reaming operation. (4)

14. (a) (i) Discuss the various types of bonding materials generally used for making grinding wheels. (10)

(ii) Write short notes on Abrasive belt grinding. (6)

Or

(b) (i) Why is gear finishing required? Discuss the various types of gear finishing operations. (12)

(ii) Write short note on super finishing. (4)

15. (a) (i) Explain the working of NC machine tool with the help of a diagram. (12)

(ii) List the advantages of CNC systems over conventional NC systems. (4)

Or

(b) (i) Explain the various steps to be followed while developing the CNC part Programs. (12)

(ii) What is 'Adaptive control'? (4)

———————

Reg. No. : | | | | | | | | | | | | |

Question Paper Code : 77214

B.E./B.Tech. DEGREE EXAMINATION, APRIL/MAY 2015.

Fourth Semester

Mechanical Engineering

ME 6402 — MANUFACTURING TECHNOLOGY – II

(Common to Industrial Engineering, Industrial Engineering and Management and Mechanical and Automation Engineering)

(Regulation 2013)

Time : Three hours | Maximum : 100 marks

Answer ALL questions.

PART A — (10 × 2 = 20 marks)

1. Write a short note on Heat zones in cutting.

2. Write a short note on any two modern tool materials.

3. What is meant by "swing of the lathe"?

4. What do you mean by copy turning?

5. What do you mean by differential indexing?

6. Why is milling a versatile machining process?

7. How does loading differ from glazing in grinding process?

8. What are the principal types of Broaching machines?

9. Define CNC and DNC.

10. What is adaptive control?

PART B — (5 × 16 = 80 marks)

11. (a) (i) With reference to orthogonal cutting, explain the following terms: Shear stress in shear plane, Shear strain, Cutting ratio, Shear angle. (8)

(ii) Prove that in orthogonal cutting, the kinetic coefficient of friction (μ) is given by $\mu = \dfrac{F_c \sin\alpha + F_t \cos\alpha}{F_c \cos\alpha - F_t \sin\alpha}$. (8)

Or

(b) (i) Tool life tests in turning yield the following data: (1) V = 110m/min, T = 20 min; (2) V = 85 m/min, T = 40 min. (A) Determine the n and C values in the Taylor tool life equation. Based on the equation, compute (B) the tool life for a speed of 95 m/min and (C) the speed corresponding to a tool life of 30 min. (8)

(ii) Explain different types of chips produced in cutting with neat sketches. (8)

12. (a) (i) Enumerate the purpose of various attachments used on a centre lathe. (8)

(ii) Explain with a neat sketch single spindle automatic lathe. (8)

Or

(b) (i) Describe a Universal type milling machine. (8)

(ii) Explain the salient features of an automatic screw machines. (8)

13. (a) (i) Explain with neat sketches the procedure for carrying out the following operations on a shaper: Horizontal cutting, Vertical cutting, concave surface, keyway cutting. (8)

(ii) List out the gear finishing processes. Explain any two with neat sketches. (8)

Or

(b) (i) Enumerate with a neat sketch Gear shaping. (8)

(ii) Compare Plain and Universal milling machine. (8)

14. (a) (i) Enumerate the advantages and disadvantages of centreless grinding. (8)

(ii) Explain the following in grinding (1) Dressing of (2) Truing. (8)

Or

(b) (i) The performance of a grinding wheel depends upon type of abrasive, grain size, grade, structure and bonding material. Discuss the effect of each. (8)

(ii) Discuss with neat sketch Vertical Broaching machine. (8)

15. (a) (i) Discuss the programming of NC machines. (8)

(ii) Discuss the constructional features of a NC machine tool and explain their functions. (8)

Or

(b) (i) List and explain the advantages of CNC systems over conventional NC systems. (8)

(ii) Explain the main difference between point to point and continuous path type numerically controlled machine tools. (8)