ME8594 DYNAMICS OF MACHINES NOTES

UNIT I FORCE ANALYSIS

Dynamic force analysis – Inertia force and Inertia torque– D Alembert's principle – Dynamic Analysis in reciprocating engines – Gas forces – Inertia effect of connecting rod– Bearing loads – Crank shaft torque – Turning moment diagrams –Fly Wheels – Flywheels of punching presses- Dynamics of Cam- follower mechanism.

UNIT II BALANCING

Static and dynamic balancing – Balancing of rotating masses – Balancing a single cylinder engine – Balancing of Multi-cylinder inline, V-engines – Partial balancing in engines – Balancing of linkages – Balancing machines-Field balancing of discs and rotors.

UNIT III FREE VIBRATION

Basic features of vibratory systems – Degrees of freedom – single degree of freedom – Free vibration– Equations of motion – Natural frequency – Types of Damping – Damped vibration– Torsional vibration of shaft – Critical speeds of shafts – Torsional vibration – Two and three rotor torsional systems.

UNIT IV FORCED VIBRATION

Response of one degree freedom systems to periodic forcing – Harmonic disturbances –Disturbance caused by unbalance – Support motion –transmissibility – Vibration isolation vibration measurement.

UNIT V MECHANISM FOR CONTROL

Governors – Types – Centrifugal governors – Gravity controlled and spring controlled centrifugal governors – Characteristics – Effect of friction – Controlling force curves. Gyroscopes –Gyroscopic forces and torques – Gyroscopic stabilization – Gyroscopic effects in Automobiles, ships and airplanes.

TOTAL : 60 PERIODS

TEXT BOOKS:

1. F. B. Sayyad, "Dynamics of Machinery", McMillan Publishers India Ltd., Tech-Max Educational resources, 2011.
2. Rattan, S.S, "Theory of Machines", 4th Edition, Tata McGraw-Hill, 2014.
3. Uicker, J.J., Pennock G.R and Shigley, J.E., "Theory of Machines and Mechanisms", 4th Edition, Oxford University Press, 2014.\

REFERENCES:

1. Cleghorn. W. L, "Mechanisms of Machines", Oxford University Press, 2014
2. Ghosh. A and Mallick, A.K., "Theory of Mechanisms and Machines", 3rd Edition Affiliated East-West Pvt. Ltd., New Delhi, 2006.
3. Khurmi, R.S.,"Theory of Machines", 14th Edition, S Chand Publications, 2005.
4. Rao.J.S. and Dukkipati.R.V. "Mechanisms and Machine Theory", Wiley-Eastern Ltd., New Delhi, 1992.
5. Robert L. Norton, "Kinematics and Dynamics of Machinery", Tata McGraw-Hill, 2009.
6. V.Ramamurthi, "Mechanics of Machines", Narosa Publishing House, 2002.

UNIT I FORCE ANALYSIS

PART A

1. Distinguish between crank effort and piston effort

(AP/May 2017, May /June 2012, Nov / Dec 2012)

Crank effort: It is the net effort (force) applied at the crank pin perpendicular to the crank, which gives the required turning moment on the crank shaft.

Piston effort: It is the net force applied on the piston, along the line of stroke.

2. Define coefficient of fluctuation of energy. (Nov / Dec 2015)

The ratio of the maximum fluctuation of speed to the mean speed is called the coefficient of fluctuation of speed.

3. In a two force planar member, (i) Specify the conditions for static equilibrium. (ii) Conditions for static equilibrium of a two- forces and a torque member.

(Nov / Dec 2010, May /June 2012, May /June 2014)

Conditions for equilibrium of a two – force member:

1) The forces are of the same magnitude
2) The forces act along the same line, and
3) The forces are in opposite directions.

Conditions for equilibrium of a two – force member and a torque member:

(i) The forces are equal in magnitude, parallel in direction and opposite in sense

(ii) The forces are form a couple C, which is equal and opposite to the applied torque.

4. Define the terms inertia force and inertia torque. (Nov / Dec 2016, Nov / Dec 2010)

- The inertia of the body that opposes the external force is known as **inertia force**
- The inertia of the body that opposes the external torque is known as **inertia torque**

5. State D'Alembert's principle. (Nov / Dec 2011,May/June 2016)

D'Alembert's principle states that the inertia forces and torques, and the external forces and torques acting on a body together result in statical equilibrium. In other

words, the vector sum of all external forces acting upon a system of rigid bodies is zero. The vector sum of all external moments and inertia torques acting upon a system of rigid bodies is also separately zero.

6. What is the purpose of flywheel? How will you differentiate the function of governor in engine with flywheel? (Nov / Dec 2016, Nov / Dec 2011 , Nov / Dec 2012)

- The **function of a governor** is to regulate the mean speed of an engine, when there are variations in the load.
- The **function of a flywheel** is to reduce the fluctuations of speed caused by the fluctuation of the engine turning moment during each cycle of operation.

7. Distinguish between static force and inertia force. (May /June 2013)

- While analyzing the mechanism, if mass of the body and inertia force are not considered, then it is called static force.
- Inertia Force Is A Fictitious Force Which When Acts Upon A Rigid Body, Brings It In An Equilibrium

8. What is engine shaking force? (May /June 2013)

The force produces in an engine due to the mass of the piston, and mass of the connecting rod is called engine shaking force.

9. Write the conditions for any distributed mass have the same dynamical properties. (Nov / Dec 2013)

(i) The mass of the rigid body must equal to the sum of masses of two concentrated masses, i.e. $m_1 + m_2 = m$

(ii) The centre of gravity of the two masses must concide with the centre of gravity of the rigid body. i.e., $m_1 \times l_1 = m_2 \times l_2$

(iii) The sum of mass moment of inertia of two masses about their centre of gravity is equal to the mass moment of the rigid body.

10. The length of the crank and connecting rod of vertical reciprocating engine are 300mm and 1.5 m respectively. If the crank rotates at 200 rpm, Find the velocity of the piston at $\theta = 40^0$ (Nov / Dec 2015)

Given Data:

l = 300mm = 0.3m

r = 1.5m

N = 200 rpm

$\theta = 40^0$

To find:

The velocity of the piston

Solution

$$\omega = \frac{2\pi N}{60} = \frac{2\pi(200)}{60} = 20.93 \text{rad/s}$$

$$n = \frac{l}{r} = \frac{0.3}{1.5} = 0.2$$

Velocity of the piston when $\theta = 40^0$

$$v_p = r\,\omega\left[\sin\theta + \frac{\sin 2\theta}{2\,n}\right]$$

$$= 1.5 \times 20.93\left[\sin 40 + \frac{\sin 80}{2\,n}\right]$$

$$= 97.01 \text{m/s}$$

PART B

1). The length of crank and connecting rod of the horizontal reciprocating engine are 300mm and 1.2 m respectively. The cylinder bore is 0.5 m and the mass of the reciprocating parts is 250 kg. The crank is rotating at 250 rpm. When the crank has turned through 60° degree from the IDC, the difference of the pressure between the cover and piston end is 0.35N/mm^2. Calculate i) Thrust on sides of the cylinder walls.

ii) Thrust in the connecting rod.

iii) crank-pin effort

iv) Turning moment on crank shaft

(Nov / Dec 2010, Nov / Dec 2012, May /June 2014)

Given

r = 300mm = 0.3m

l = 1.2m

m = 250Kg

$\theta = 60^0$

$P_1 - P_2 = 0.35$ N/mm^2

D = 0.5m

N = 250 rpm

Solution:-

$$\omega = \frac{2\Pi N}{60} = 26.2 \text{ rad / s}$$

1) Thrust on sides of the cylinder walls.

FN = Fp tanϕ

FP = FL – FI

$= [(P_1 - P_2) \frac{\Pi}{4} D^2 - [m \omega^2 r (cos\theta + cos2\theta / n)]$

= 68730 – 19306

F_P = 49.424 KN

$\sin \phi = \sin \frac{\theta}{n} \Rightarrow \phi = 12.5°$

$F_N = F_P \tan\phi$ = 10.96 KN

2) Thrust in the connecting rod.

$F_Q = \frac{FP}{cos\phi}$ = 50.62KN

3) Tangential force on the crank – pin

$F_T = F_Q \; Sin\,(\theta + \phi) = 48.28KN$

4) Turning moment on the crank shift

T = Fr × r = 14.484 KN-m

2). A petrol engine with 100mm stroke and connecting rod length 200mm runs at 1800rpm.The reciprocating engine has a mass of 1kg and the piston rod is 80 mm diameter. At a point during the power stroke, the pressure on the piston 0.7 N/mm^2, when it has moved 10mm from inner dead centre.

i) Net load on the gudgeon pin,

ii) Thrust in the connecting rod,

iii) Reaction between the piston and cylinder,

iv) The engine speed at which in the above values becomes zero

(Nov / Dec 2015, May /June 2016)

Given

N = 1800 rpm

r = 50mm = 0.05m

l = 200mm

D = 80mm

m_R = 1 Kg

P = 0.7 N/mm2

x = 10mm

Solution :

$$\omega = \frac{2\Pi N}{60} = 188.52 \text{ rad /sec}$$

1) Net load on the gudgeon pin

FP = FL – FI = 1840 N

$F_L = \frac{\Pi}{4} D^2 \times p = 3520$ N

$F_I = m_R \omega^2 r \left(\cos\theta + \frac{\cos 2\theta}{n}\right) = 1671$ N

2) **Thurst in the connecting rod**

$\sin\phi = \sin\frac{\theta}{n} \Rightarrow \phi = 7.82°$

$F_Q = \frac{FP}{\cos\phi} = 1866.3$ N

3) Reaction between the piston and cylinder,

$F_N = F_P \tan\phi = 254$ N

4) Engine speed at which the above values until become zero

FP = FL – FI

$0 = F_L - FI$

$F_L = FI$

$m_r (\omega_1)^2 r \left(\cos\theta + \frac{\cos 2\theta}{n}\right) = \frac{\Pi}{4} D^2 P$

$\omega_1^2 = 74894 \Rightarrow \omega_1 = 273.6$ rad/sec

N_1 = 2612 rpm.

3). The turning moment diagram for a petrol engine is drawn to the following scales: Turning moment, 1mm=5 N-m: crank angle, 1 mm=1°.The turning moment diagram repeats itself at every half revolution of the engine and areas above and below the mean turning moment line taken in order are 295, 685, 40, 340, 960, 270 mm^2.The rotating parts are equivalent to a mass of 36 kg at a radius of gyration of 150mm.Determine the coefficient of fluctuation of speed when the engine runs at 1800r.p.m.

(Nov / Dec 2009, May/June 2009, Nov / Dec 2015)

Given

m=36kg

k =150mm = 0.15 m

N = 1800 rpm

ω = 188.52 rad/sec

Solution:

Scale :

1) Turning moment 1mm = 5N-m

2) Crank angle 1mm = 1^0

$= \frac{\Pi}{180} rad$

$\therefore$ Turning moment = 5 x $\frac{\pi}{180} = \frac{\pi}{36}$ = 0.08722 N-m

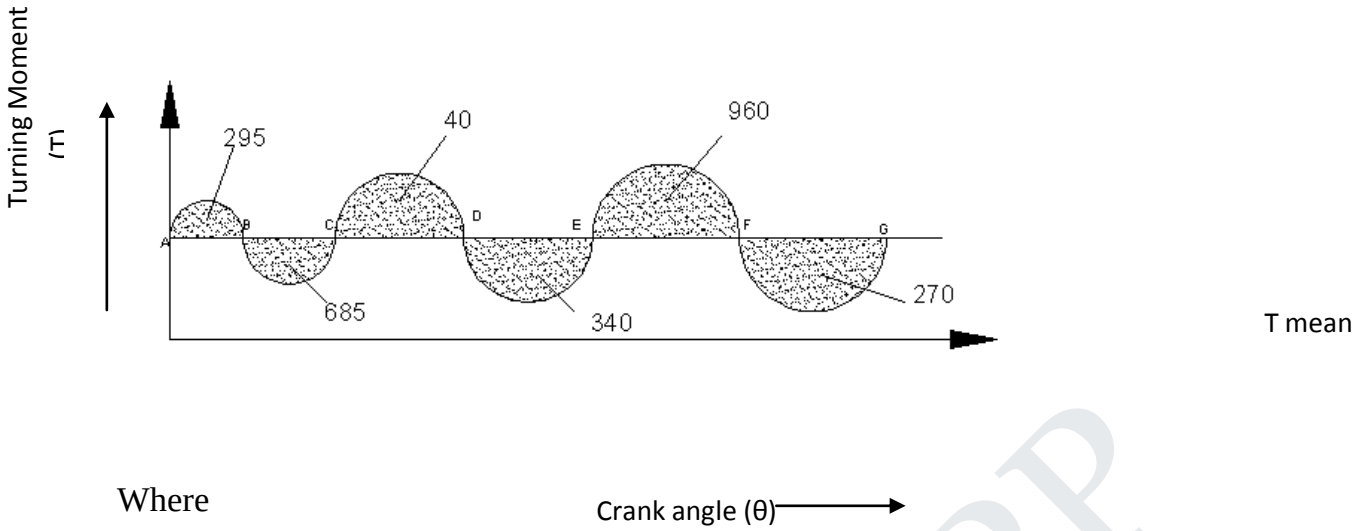

Where

A = E

B= E+295

C = E +295 – 685

D = E +295 – 685 + 40

E = E +295 – 685 + 40 – 340

F = E +295 – 685 + 40 – 340 +960

G = E +295 – 685 + 40 – 340 +960 – 270

Maximum energy at B = E+295

Minimum energy at E = E – 690

ΔE = (maximum energy) – (minimum energy)

= (E+295) – (E – 690) [$\therefore$ 1mm^2 = 0.0872 N-m]

= 985 mm^2

ΔE = 985 × 0.0872 = 85.892 N-m

$\Delta E = m k^2 \omega^2 c_s$

$85.892 = 36 \times 0.52^2 \times (2\pi \times 1800)/60) \times c_s$

C_s = 0.003 (or) **0.3%**

4). A shaft fitted with a flywheel rotates at 250r.p.m and drives a machine. The torque of machine varies in a cyclic manner over a period of 3 revolutions. The torque rises from 750 N-m to 3000 N-m uniformly during ½ revolution and remains constant for the following revolution. It then falls uniformly to 750N-m during the next ½ revolution and remains constant for one revolution, the cycle being repeats thereafter. Determine the power required to drive the machine and percentage fluctuation in speed, if the driving torque applied to the shaft is constant and the mass of the flywheel is 500kg

with radius of gyration of 600mm.

(May/June 2014, Nov / Dec 2009)

Given

N = 250 rpm

M = 500Kg

K = 600 mm = 0.6m

$\omega = \frac{2\Pi N}{60}$ = 26.2 rad/s

Solution

Torque required for one complete cycle = Area of figure OABCDEF

= Area OAEF + Area ABG + Area BCHG + Area CDH

= (OFx OA) + ½ (AGxBG)+(GHxCH) + ½ (HDxCH)

= 11250 Π N-m

$$T\ mean = \frac{112505}{6\pi} = 1875\ N.m.$$

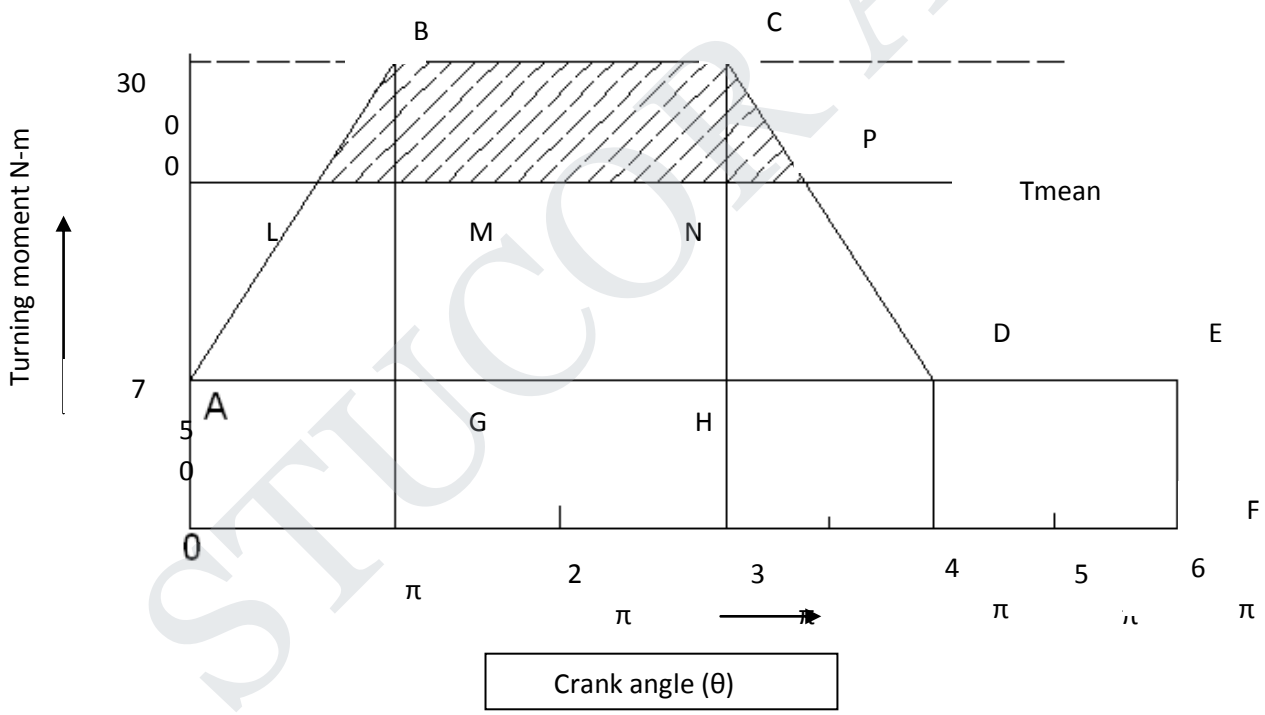

(i) Power required to drive the machine

P = Tmean x ω = 49.125 KW

(ii) Total flucation of the Speed

From the Triangle ABG & LBM

$$\frac{LM}{AB} = \frac{BM}{BG}$$

$$\frac{LM}{\pi} = \frac{1125}{2250}$$

L_M = 1.570

From the Triangle NCP & HCD

$$\frac{NP}{HD} = \frac{CN}{CH}$$

$$\frac{NP}{\pi} = \frac{1125}{2250}$$

$$N_P = 1.570$$

From the Rectangle BMCN

BM = CN = 1125 N-m

ΔE = Area LBCP

= Triangle LBM + Rectangle BMCN + Triangle CNP.

= (½ * LM * BM) + (BM * CN) + (½ * CN*NP)

= (½ *1.57 * 1125) + (1125 * 2π) + (½ * 1125*π)

ΔE = 8837 N-m

$\Delta E = m K^2 \omega^2 c_s$

$C_s = 0.071 * 100$

$C_s = 7.1\%$

5).The turning moment curve for an engine is represented by the equation, T=(20000+9500 sin2θ-5700cos 2θ)N-m, where θ is the angle moved by the crank from inner dead centre.

If the resisting torque is constant, find:

1. **Power developed by the engine**
2. **Moment of inertia of flywheel in kg-m^2, if the total fluctuation of speed is not to exceed 1% of mean speed which is 180r.p.m and**
3. **Angular acceleration of the flywheel when the crank has turned through 45° from inner dead centre.**

(Nov / Dec 2012, Nov / Dec 2014)

Given data:

T= (20000+9500 sin 2θ – 5700 cos2θ) N-m

N = 180rpm

ω = 18.85rad/sec

θ = 45^0

C_S = 1% or 0.01

Solution :

Power developed by the engine work done per revolution = $\int_0^{2\Pi} T d\theta$

$$= \int_0^{2\Pi} (20{,}000 + 9500 \sin 2\theta - 5700 \cos 2\theta)\, d\theta$$

$= 40{,}000\ \Pi$ N-m

Tmean = workdone per revolution / 2Π = 20,0000 N-m

P = T mean× ω = 377 KW.

Moment of inertia of flywheel (I) kg-m2

T = Tmean

$(20000+9500 \sin 2\theta - 5700 \cos 2\theta) = 20000$

$9500 \sin 2\theta - 5700 \cos 2\theta = 20000 - 20000$

$9500 \sin 2\theta = 5700 \cos 2\theta$

$\sin 2\theta / \cos 2\theta = 5700 / 9500$

$\tan 2\theta = 0.6$

$2\theta = \tan^{-1} 0.6$

$2\theta = 30.96$

$\theta = 30.96 / 2$

$\theta_B = 15.48^0$. ($\theta_B = 15.5$, $\theta_C = 90 + 15.5 = 105.5^0$)

$\theta_B = 15.5^0$ and $\theta_C = 105.5^0$

$$\Delta E = \int_{\theta B}^{\theta C} (T - \text{Tmean})\, d\theta$$

$$= \int_{15.5}^{105.5} ((20000 + 9500 \sin 2\theta - 5700 \cos 2\theta) - 20000)\, d\theta$$

ΔE = 11078 N-m

$\Delta E = I\, \omega^2\, Cs$

$11078 = I * 18.85^2 * 0.01$

$I = 3121$ Kg.m^2

Angular acceleration of flywheel (α) ($\theta = 45^0$)

T excess = T – Tmean

T excess = $9500 \sin 2\theta - 5700 \cos 2\theta$

T excess = I x α

$9500 \sin 2(45) - 5700 \cos 2(45) = 3121 * \alpha$

$\alpha = 3.044$ rad/s^2

PART-C

1. **A vertical, single cylinder, single acting diesel engine has a cylinder diameter300 mm, stroke length 500 mm, and connecting rod length 4.5 times the crank length. The engine runs at 180 r.p.m. The mass of the reciprocating parts is 280 kg. The compression ratio is 14 and the pressure remains constant during the injection of the oil for 1/10th of the stroke. If the compression and expansion follows the law p.V1.35 = constant, find:1.**

Crank-pin effort, 2. Thrust on the bearings, and 3. Turning moment on the crank shaft, when the crank displacement is 45° from the inner dead centre position during expansion stroke. The suction pressure may be taken as 0.1 N/mm^2.

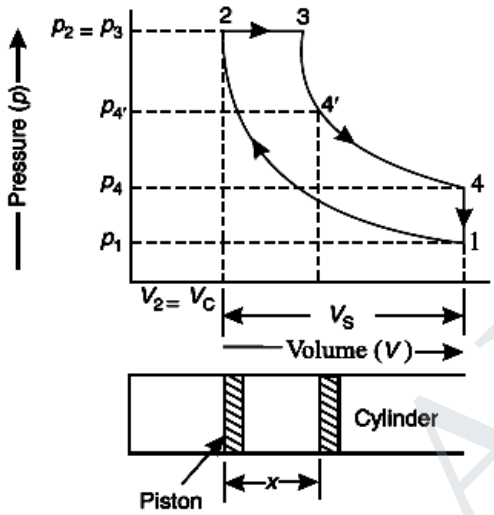

Solution.

Given : D = 300 mm = 0.3 m ;L = 500 mm = 0.5 m or r = 0.25 m ; l = 4.5 r or n = l / r = 4.5; N = 180 r.p.m. or ω = 2π × 180/60 = 18.85 rad/s ; mR = 280 kg V_1/ V_2= 14; θ = 45°; p1 = 0.1 N/mm^2

The pressure-volume (i.e. p-V) diagram for a diesel engine is shown in Fig, in which 1-2 represents the compression, 2-3 represents the injection of fuel, 3-4 represents the expansion, and 4-1 represents the exhaust.

Let

P_1, P_2, P_3, and P_4 = Pressures corresponding to points 1, 2, 3 and 4 respectively,

V_1, V_2, V_3, and V_4 = Volumes corresponding to points 1, 2, 3 and 4 respectively.

Since the compression follows the law $PV^{1.35}$ = constant, therefore

$$P_1 (V_1)^{1.35} = P_2 (V_2)^{1.35} \quad \text{or}$$

$$P_2 = P_1 (V_1/V_2)^{1.35} = 0.1 \times (14)^{1.35} = 3.526 \text{ N/mm}^2$$

We know that swept volume

$$V_S = \pi / 4 \times D^2 = \pi / 4 \times (0.3)^2 \times 0.5 = 0.035 \text{ m}^3$$

$$\text{compression ratio,} = \frac{V_1}{V_2} = \frac{V_C + V_S}{V_C} = 1 + \frac{V_S}{V_C}$$

$$14 = 1 + \frac{0.035}{V_C} \quad \text{or} \quad V_C = \frac{0.035}{14 - 1} = 0.0027 \text{ m}^3$$

Since the injection of fuel takes place at constant pressure (i.e. $p_2 = p_3$) and

continues up to 1/10th of the stroke, therefore volume at the end of the injection of fuel,

$$V_3 = V_C + \frac{1}{10} \times V_S = 0.0027 + \frac{0.035}{10} = 0.0062 \text{ m}^3$$

When the crank displacement is 45° (i.e. when θ = 45°) from the inner dead centre during expansion stroke, the corresponding displacement of the piston (marked by point 4' on the p-V diagram) is given by

$$x = r\left[(1 - \cos\theta) + \frac{\sin^2\theta}{2n}\right] = r\left[(1 - \cos 45°) + \frac{\sin^2 45°}{2 \times 4.5}\right]$$

$$= 0.25\left[(1 - 0.707) + \frac{0.5}{9}\right] = 0.087 \text{ m}$$

$$V_4' = V_C + \frac{\pi}{4} \times D^2 \times x = 0.0027 + \frac{\pi}{4} \times (0.3)^2 \times 0.087 = 0.0088 \text{ m}^2$$

Since the expansion follows the law P.V $^{1.35}$ = constant, therefore

$$p_3\,(V_3)^{1.35} = p_{4'}\,(V_{4'})^{1.35}$$

$$p_{4'} = p_3\left(\frac{V_3}{V_{4'}}\right)^{1.35} = 3.526\left(\frac{0.0062}{0.0088}\right)^{1.35} = 2.2 \text{ N/mm}^2$$

Difference of pressures on two sides of the piston,

$$p = p_{4'} - p_1 = 2.2 - 0.1 = 2.1 \text{ N/mm}^2 = 2.1 \times 10^6 \text{ N/m}^2$$

∴

Net load on the piston,

$$F_L = p \times \frac{\pi}{4} \times D^2 = 2.1 \times 10^6 \times \frac{\pi}{4} \times (0.3)^2 = 148\,460 \text{N}$$

Inertia force on the reciprocating parts,

$$F_I = m_R.\omega^2.r\left(\cos\theta + \frac{\cos 2\theta}{n}\right)$$

$$= 280 \times (18.85)^2 \times 0.25\left(\cos 45° + \frac{\cos 90°}{4.5}\right) = 17\,585 \text{ N}$$

We know that net force on the piston or piston effort,

$$F_P = F_L - F_I + W_R = F_L - F_I + m_R.g$$

$$= 148\,460 - 17\,858 + 280 \times 9.81 = 133\,622 \text{ N}$$

1. Crank-pin effort

Let φ = Angle of inclination of the connecting rod to the line of stroke.

$$\sin\phi = \sin\theta/n = \sin 45°/4.5 = 0.1571$$
$$\phi = 9.04°$$

We know that crank-pin effort

$$F_T = \frac{F_P \sin(\theta+\phi)}{\cos\phi} = \frac{133622 \times \sin(45° + 9.04°)}{\cos 9.04°} = 109522 \text{ N}$$
$$= 109.522 \text{ kN} \quad \textbf{Ans.}$$

2. Thrust on the bearings

$$F_B = \frac{F_P.\cos(\theta+\phi)}{\cos\phi} = \frac{133622 \times \sin(45° + 9.04°)}{\cos 9.04°} = 79456 \text{ N}$$
$$= 79.956 \text{ kN} \quad \textbf{Ans.}$$

3. Turning moment on the crankshaft

$$T = F_T \times r = 109.522 \times 0.25 = 27.38 \text{ kN-m} \quad \textbf{Ans.}$$

UNIT II BALANCING

PART A

1. **Differentiate: Static and Dynamic Balancing. (May '16), (Nov '12)**

Static Balancing:-

The net dynamic force acting on the shaft is equal to zero. This requires that the line of action of three centrifugal forces must be the same. This is the condition for static balancing.

Dynamic Balancing:-

The net couple due to the dynamic forces acting on the shaft is equal to zero, provides the condition for dynamic balancing.

2. **What is meant by balancing of rotating masses? (May ' 16)**

The process of providing the second mass in order to counteract the effect of the centrifugal force of the first mass is called balancing of rotating masses.

3. **State the reasons for choosing multi - cylinder engine in comparison with that of the single cylinder engine. (Nov '15)**

The multi - cylinder engine is choose in compassion with that of the single cylinder engine because of

- Complete balancing of primary and secondary forces are possible whereas
- In case of single cylinder engine, partial balancing alone is possible.

4. **What do you mean by partial balancing single cylinder engine? (Nov '15)**

The unbalanced force due to reciprocating masses ($m\omega^2 r \cos\theta$, and $m\omega^2 r \cos 2\theta/n$,) varies in magnitude because of θ , but constant in direction while due to the revolving masses, the unbalanced force is constant in magnitude but rates in direction in known as partial balancing of single cylinder engine.

5. **When is a system said to be completely balanced? (May '14)**

Condition for complete balance

I. The resultant centrifugal force must be zero.
II. The resultant couple must be zero.

6. **What is tractive force? (May "14)**

It is the resultant unbalanced force due to the two cylinders along the line of stoke.

7. **Define swaying couple. (Nov "14)**

The unbalanced forces along the line of stroke for the two cylinders constitute a couple about the centre line YY between the cylinders.
This couple has swaying effect about a vertical axis, and tends to sway the engine alternatively in clockwise and anti- clockwise. This couple is known as "swaying couple".

8. Define hammer blow in locomotives. (Ap/May 2017, Nov 16, Nov'13)

It is defined as the maximum magnitude of the unbalanced force along the perpendicular to the line of stroke.

9. How does firing order affect the balancing of incline multi cylinder engine? (May'11)

With respect to firing order, unbalanced primary and secondary couple will vary in its magnitude and direction. Because firing order represents, the position of an engine in plane position diagram. If position charges, respective couple will vary.

10. Define the term shaking or unbalanced force.

It is defined as the resultant of all the forces acting on the body of the engine due to inertia forces only is known as unbalanced force or shaking force.

Part B

1. A,B,C and D are four masses carried by a rotating shaft at radii 100 , 125, 200 and 150 mm respectively. The planes in which the masses revolve are spaced 600 mm apart and the masses of B ,C and D are 10 kg, 5 kg and 4 kg respectively. Find the required mass A and the relative angular settings of the four masses so that the shaft shall be in complete balance.

[NOV ' 12, May ' 14 ,NOV ' 15]

Given data:

r_A = 100 mm = 0.1 m

r_B= 125 mm = 0.125 m m_B = 10 kg

r_C = 200 mm = 0.2 m m_C = 5 kg

r_D = 150 mm = 0.15 m m_D = 4 kg

To find:

- Mass of A (m_A)
- Angular settings (<BOA)

Solution:

The position of planes is shown in fig.

Plane	Mass (m) Kg	Radius (r) m	Centrifugal force N	Distance from plane A (l) "m"	Couple ÷ ω^2 (mrl) Kg m^2
A	m_A	0.1	0.1 m_A	0	0
B	10	0.125	1.25	0.6	0.75
C	5	0.2	1	1.2	1.2
D	4	0.15	0.6	1.8	1.08

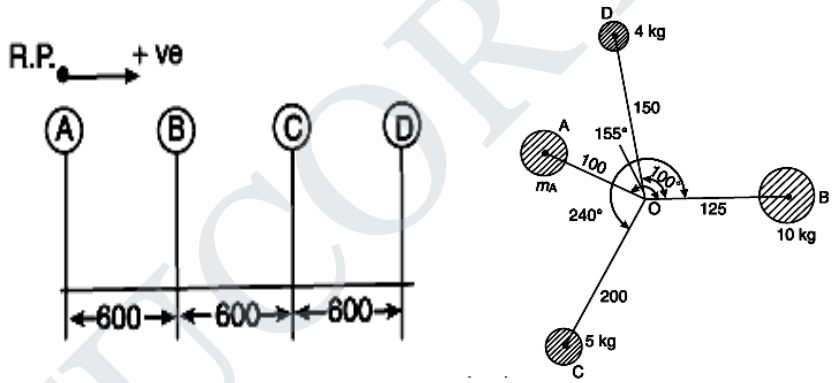

(a) Position of planes. (b) Angular position of masses.

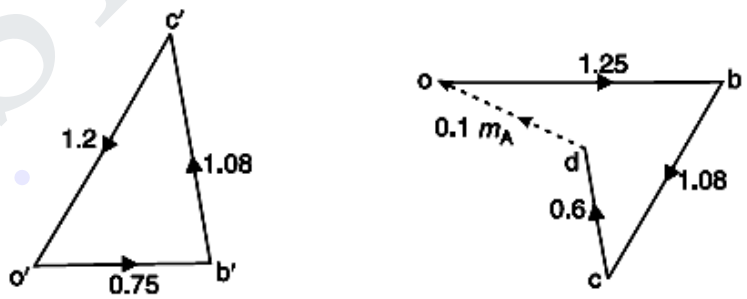

(c) Couple polygon. (d) Force polygon.

Result :

a) Mass A m_A= 7 kg

b) Angular setting $\theta_A = 155^0$ (anticlockwise Direction)

(2).The following data apply to an outside cylinder uncoupled locomotive:

Mass of rotating parts per cylinder = 360Kg ;
Mass of reciprocating parts per cylinder = 300 kg ;
Angle b/w cranks = 90^0 ; Crank radius = 0.3 m ;
Cylinder centers = 1.75 m ,
Radius of balance masses = 0.75 m, Wheel centres = 1.45 m.
If whole of the rotating and two- thirds of reciprocating parts are to be balanced in planes of the driving wheels, find:
1. Magnitude and angular positions of balance masses,
2.speed in kilometres per hour at which the wheel will left off the rails when the load on each driving wheel is 30 kN and the diameter of tread of driving wheels is 1.8 m , and
3. swaying couple at speed arrived at in (2) above. (NOV '' 13)

Given data:

m_1 = 360 kg, m_2 = 300 kg ,
< AOD =90^0 , r_A= r_B = 0.3 m,
a = 1.75 m, r_B=r_C =0.75 m,
c = 2/3

To Find :

1. Magnitude and angular position of balance masses (i.e., m_B, m_C & θ_B ,θ_C)
2. Speed (v)
3. Swaying couple

Solution:

Plane	Mass (m) Kg	Radius(r) m	Centrifugal force N	Distance from plane A (l) "m"	Couple ÷ ω^2 (mrl) Kg m^2
A	560	0.3	168	-0.15	-25.2
B(R.P)	m_B	0.75	0.75 m_B	0	0
C	M_c	0.75	0.75 m_c	1.45	1.08 m_c
D	560	0.3	168	1.6	268.8

The equivalent mass of the rotating parts to be balanced per cylinder

$$m = m_A = m_D = m_1 + c.\ m_2$$

$= 360 + (2/3)\ 300$

$= 560$ kg

From fig (c) couple polygon, by measurement

$1.08\ m_C = 269.6$ kg - m^2

$m_C = (269.6/1.08)$

$= 249$ kg

From fig (d) couple polygon, by measurement

$\theta_C = 275^0$

From Fig (d) Force polygon, the vector o represent the balancing force, by measurement

$0.75\ m_B = 186.75$ kg - m

$m_B = 249$ kg

From vector OB , by measurement

$\theta_B = 174.5^0$

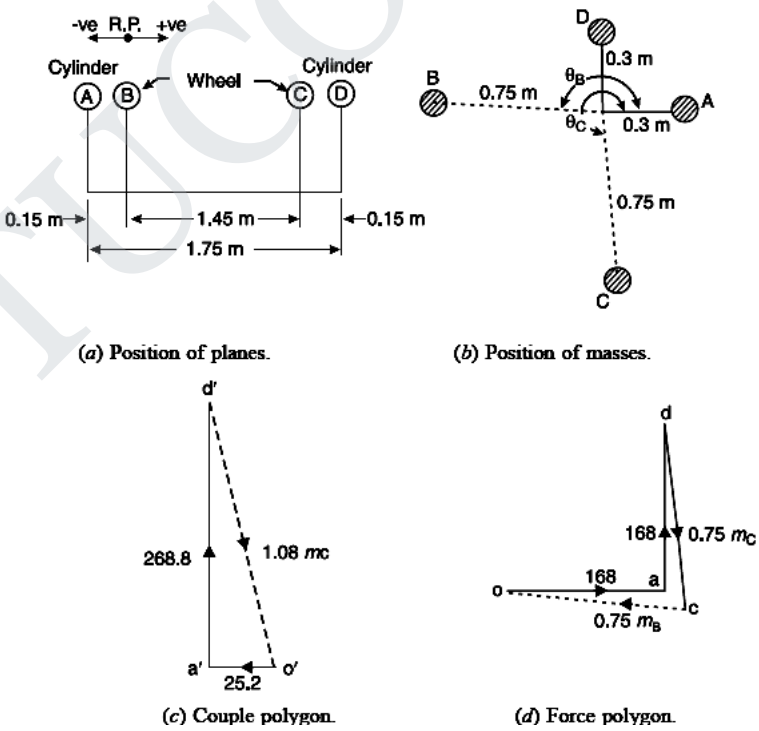

(a) Position of planes. (b) Position of masses.

(c) Couple polygon. (d) Force polygon.

Determine of V:

Given P = 30 kN = 30×10^3 N, D = 1.8 m, Balancing masses $m_B = m_C$ = 249 kg

Balancing mass for reciprocating parts,

$$B = \frac{cm_2}{m} \times 249$$

$$= \frac{2}{3} \times \frac{300}{500} \times 249$$

$$= 89 \text{ kg}$$

WKT

$$\omega = \sqrt{\frac{P}{Bb}} = \sqrt{\frac{30\times10^3}{89\times0.75}} = 21.2 \text{ rad/s}$$

velocity = r ω $= \frac{1.8}{2} \times 21.2 = 19.08$ m/s =68.7 km/h

Determination of swaying couple:

$$\text{swaying couple} = \frac{a(1-c)}{\sqrt{2}} \times m^2 r\, \omega^2$$

$$= 16.68 \text{ KN-m}$$

(3). A four crank engine has two outer cranks set at 120^0 to each other and their reciprocating masses are each 400 kg. The distance between the planes of rotation of adjacent cranks are 450 mm , 750 mm and 600 mm. if the engine is to be in complete primary balance, find the reciprocating mass and the relative angular position for each of the inner cranks.

If the length of each crank is 300 mm, the length of each connecting rod is 1.2 m and the speed of rotation is 240 rpm.what is the maximum secondary unbalanced force? (Nov '12 ,May '14)

Given data:

$m_1 = m_4$ = 400 kg ;

r = 0.3 m , l = 1.2 m, N = 240 rpm

$$\omega = \frac{2\pi N}{60} = 25.14 \text{ rad/s}$$

To find:

1. Reciprocating mass, its relative angular position
2. Maximum secondary unbalanced force

Solution:

Let m_2 & m_3 = Reciprocating mass for then inner cranks 2 & 3 resp.

θ_2 & θ_3 = Angular position of the cranks 2& 3 with respect to crank 1 resp.

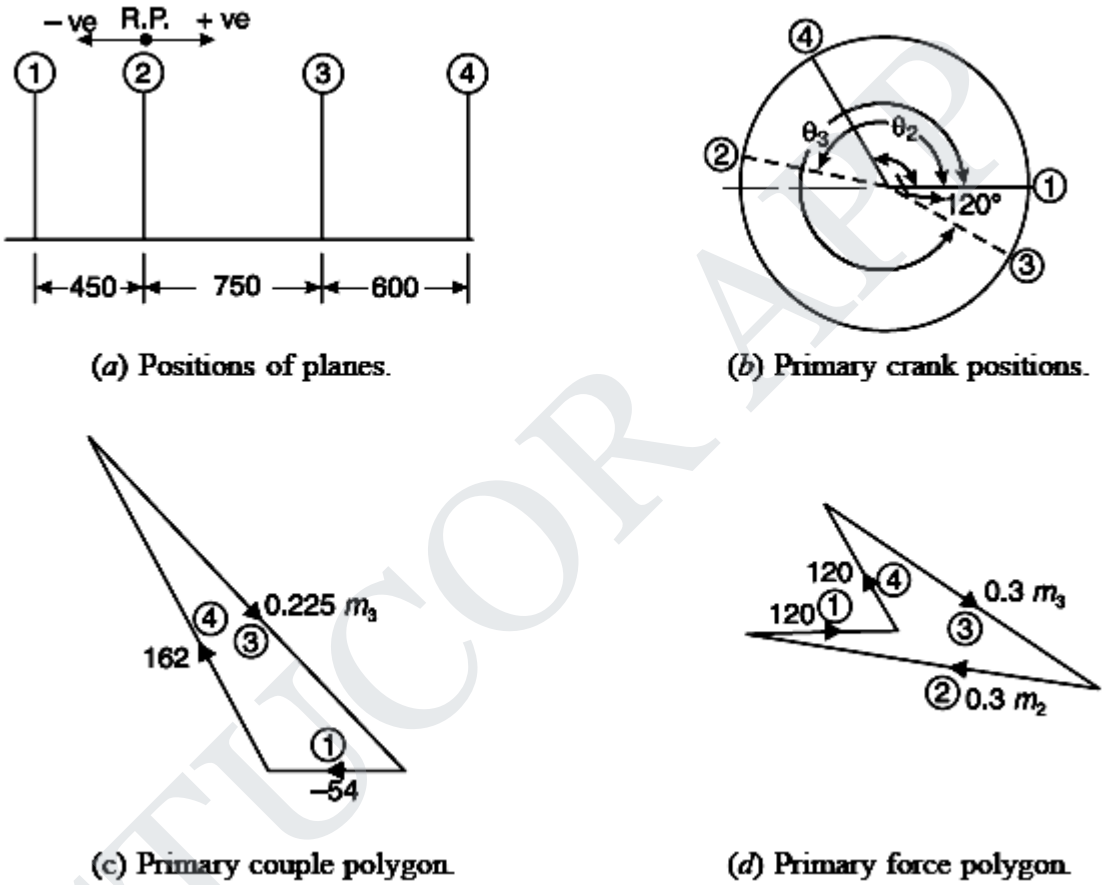

(a) Positions of planes.

(b) Primary crank positions.

(c) Primary couple polygon.

(d) Primary force polygon.

Plane	Mass (m) Kg	Radius(r) m	Centrifugal force N	Distance from plane A (l) "m"	Couple $\div \omega^2$ (mrl) Kg m^2
1	400	0.3	120	-0.45	-54
2(R.P)	m_2	0.3	0.3 m_2	0	0
3	m_3	0.3	0.3 m_3	0.75	0.225

					m_3
4	400	0.3	120	1.35	162

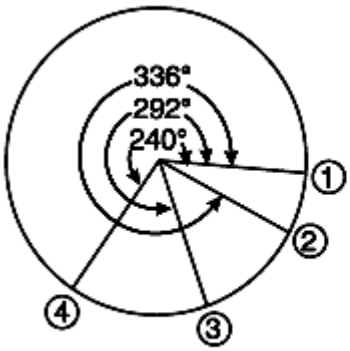

(e) Secondary crank positions.

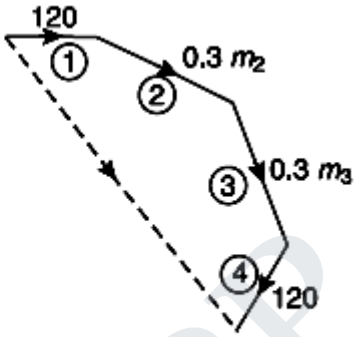

(f) Secondary force polygon.

From Fig (c) the primary couple polygon, the reciprocating mass for crank 3 is determined

$$0.225\ m_B = 196$$

$$m_B = 871\ \text{kg}$$

Its angular position wrt crank 1 in the counter clockwise direction is

$$\theta_3 = 326^0$$

From fig (d) the primary force polygon the reciprocating mass for crank 2, is determined as follows:

$$0.3\ m_2 = 284\ \text{kg-m}$$

$$m_2 = 947\ \text{kg}$$

Its angular position wrt crank 1 in the counter clockwise direction is

$$\theta_2 = 168^0$$

Determination of maximum secondary unbalanced force.

The secondary crank positions obtained by rotating the primary cranks at twice the angle, is shown in fig(e).

The secondary force polygon is drawn to suitable scale providing the closing side represents the maximum secondary unbalanced force.

Maximum secondary unbalanced force is

$$= 582\times\frac{\omega^2}{n} = 582\times\frac{25.14^2}{\frac{1.2}{0.3}}$$

$$= 91.96 \times 10^3 \text{ N}$$

Result :

1. The reciprocating mass m_2 = 947 kg
   m_3= 871 kg
2. Its angular position $\theta_2 = 168^0$
   $\theta_3 = 326^0$
3. Maximum secondary unbalanced force is 91.9 kN

(4) The three cylinders of an air compressor have their axes 1200 to one another, and their connecting rods are coupled to a single crank. The stroke is 100 mm and length of each connecting rod is 150 mm. The mass of the reciprocating parts per cylinder is 1.5 kg. Find the maximum primary and secondary forces acting on the frame of the compressor when running at 3000rpm.(Nov '13)

Given data:

Stroke L = 100 mm = 0.1 m
Radius r = L/2 = 0.05 m
Length of connecting rod (l) = 150 mm
Mass of reciprocating parts per cylinder (m) = 1.5 kg
Speed N = 3000 rpm ; $\omega = \frac{2\pi N}{60}$ = 314.2 rad/s

To find:

(1) Maximum primary force acting on the frame of the compressor
(2) Maximum secondary force acting on the frame of the compressor.

Solution:

The position of three cylinders is shown below

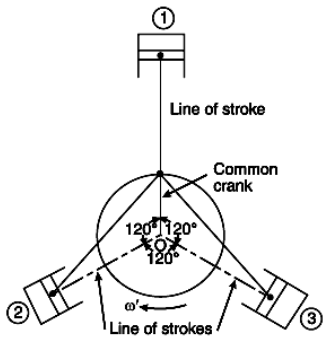

Let the common crank be along the inner dead centre of cylinder 1.

Since common crank rotates clockwise, θ is + ve.

Determination of (i)

The primary direct and reverse crank positions are shown in Fig (b) and (c)

when $\theta = 0^0$ for cylinder 1, both the primary direct and reverse cranks will coincide with the common crank.

when $\theta = \pm 120^0$ for cylinder 2, the primary direct crank is 120^0 clockwise and the primary reverse crank is120^0 anti- clockwise from the line of stroke of cylinder 2.

when $\theta = \pm 240^0$ for cylinder 3, the primary direct crank is 240^0 clockwise and the primary reverse crank is 240^0 anti- clockwise from the line of stroke of cylinder 3.

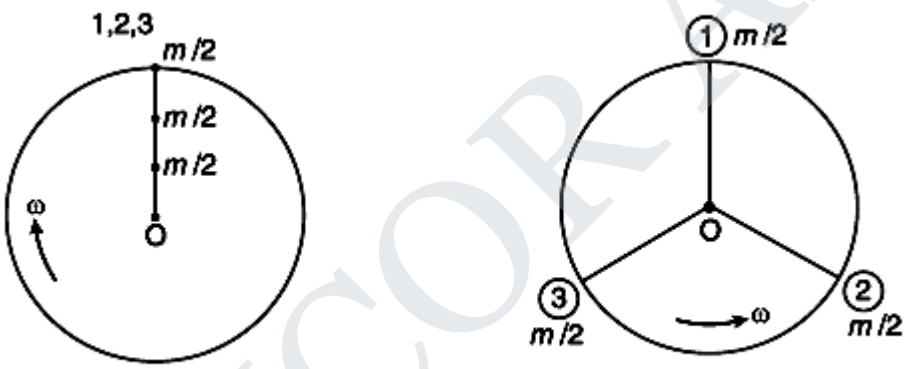

(a) Direct primary cranks. (b) Reverse primary cranks.

From Fig (c) the primary reverse cranks form a balanced system.

There is no unbalanced primary force due to the reverse cranks.

From Fig (b) the resultant primary force is equivqlent to the centrifugal force of mass 3 (m/2) attached to the end of the crank.

Maximum primary force = $\frac{3m}{2}\omega^2 r$

$= \frac{3\times1.5}{2} 314.5^2 \times 0.05$

= 11.11 kN

The maximum primary force may be balanced by a mass attached diametrically opposite to the crank pin and rotating with the crank of magnitude B_1 at radius b_1

$$B_1b_1 = \frac{3m}{2} r = \frac{3\times1.5}{2} \times 0.05$$

$$= 0.1125 \text{ Nm.}$$

Determination of (ii)

The secondary direct and reverse crank position are shown in fig (a) & (b) diagram given below

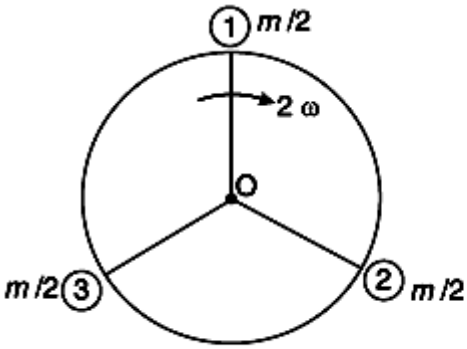

(a) Direct secondary cranks.

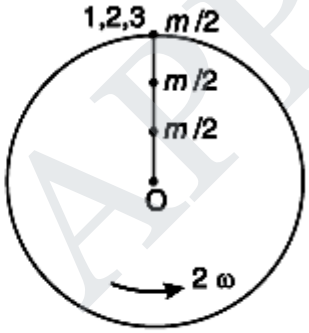

(b) Reverse secondary cranks.

Maximum secondary force $= \frac{3m}{2}(2\omega)^2(\frac{r}{4n})$

$$= \frac{3\times1.5}{2}(2\times314.5)^2(\frac{r0.05}{4\frac{0.15}{0.05}})$$

$$= 3702 \text{ N}$$

Balanced by mass B_2,

$$B_2b_2 = \frac{3m}{2} \times (\frac{r}{4n}) = 0.009\text{Nm.}$$

Result:

1) Maximum primary Force = 11.1kN

2) Maximum Secondary force = 3.7 kN.

(5) A vee - twin engine has the cylinder axes right angles and the connecting rods operate a common crank. The reciprocating mass per cylinder is 11.5 kg and the crank radius is 15mm. The length of the connecting rod is 0.3 m. show that the may be balanced for primary forces by means of a revolving balance mass.

If the engine speed is 500 rpm. What is the value of maximum resultant secondary force/ **(Nov '15)**

Given data:

$2\alpha = 90^0$, $\alpha = 45^0$, m = 11.5 kg , r = 75 mm = 0.075 m

$l = 0.3$ m ,N = 500 rpm, $\omega = \frac{2\pi N}{60} = 52.37$ rad/s

To Find:

Maximum resultant secondary force

Solution:

We known that the resultant primary force (F_P)

$$F_P = 2\, m\, \omega^2 r\sqrt{(cos^2 \propto \times cos\theta)^2 + (sin^2 \propto \times sin\theta)^2}$$

$$= 2\, m\, \omega^2 r\sqrt{(cos^2 45 \times cos\theta)^2 + (sin^2 45 \times sin\theta)^2}$$

$$F_P = m\, \omega^2 r$$

Since the resultant primary force $m\,\omega^2 r$ is the centrifugal force of mass m at the crank radius "r" when rotating at ω rad/s

The engine may be balanced by a rotating balanced mass.

Maximum resultant secondary force:

WKT, theresultant secondary force (F_S)

$$F_S = \sqrt{2}\frac{m}{n}\omega^2 r \sin 2\theta \quad (\text{when } 2\alpha = 90^0)$$

$\sin 2\theta = \pm 1$ ($\therefore$ Maximum)

$$\therefore\ \theta = 45^0 \text{ or } 135^0$$

$$\therefore\ F_S = \sqrt{2}\frac{m}{n}\omega^2 r = \sqrt{2}\ \frac{11.5\times(52.37)^2}{n0.3/0.075} \times 0.075$$

$$= 836 \text{ N}$$

Result: The maximum secondary resultant force = 836 N

PART-C

1. **A shaft has three eccentrics, each 75 mm diameter and 25 mm thick, machined in one piece with the shaft. The central planes of the eccentric are 60 mm apart. The distance of the centres from the axis of rotation is 12 mm, 18 mm and 12 mm and their angular positions are 120° apart. The density of metal is 7000 kg/m^3. Find the amount of out-of-balance force and couple at 600 r.p.m. If the shaft is balanced by adding two masses at a radius 75 mm and at distances of 100 mm from the central plane of the middle eccentric, find the amount of the masses and their angular positions.**

Solution.

Given : D = 75 mm = 0.075 m ; t = 25 mm = 0.025 m ; r_A = 12 mm = 0.012 m ;

r_B = 18 mm = 0.018 m ; r_C = 12 mm = 0.012 mm ; ρ = 7000 kg/m^3 ; N = 600 r.p.m.

ω = 2π × 600/60 = 62.84 rad/s ; $r_L = r_M$ = 75 mm = 0.075 m

We know that mass of each eccentric,

$$m_A = m_B = m_C = \text{Volume} \times \text{Density} = \frac{\pi}{4} \times D^2 \times t \times \rho$$
$$= \frac{\pi}{4}(0.075)^2(0.025)7000 = 0.77 \text{ kg}$$

Let L and M be the planes at distances of 100 mm from the central plane of middle eccentric. The position of the planes and the angular position of the three eccentrics is shown in Fig. (a) and (b) respectively. Assuming L as the reference plane and mass of the eccentric A in the vertical direction, the data may be tabulated as below :

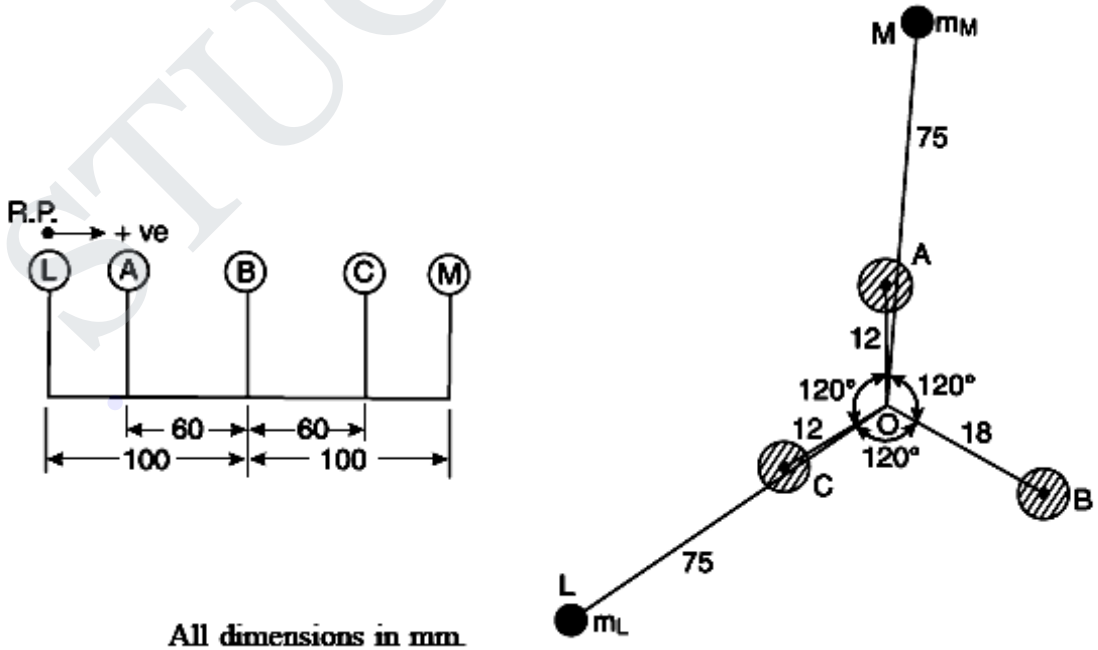

(a) Position of planes. (b) Angular position of masses.

Plane (1)	Mass (m) kg (2)	Radius (r) m (3)	Cent. force $\div \omega^2$ (m.r) kg-m (4)	Distance from plane L.(l)m (5)	Couple $\div \omega^2$ (m.r.l) kg-m^2 (6)
L (R.P.)	m_L	0.075	$75 \times 10^{-3}\ m_L$	0	0
A	0.77	0.012	9.24×10^{-3}	0.04	0.3696×10^{-3}
B	0.77	0.018	13.86×10^{-3}	0.1	1.386×10^{-3}
C	0.77	0.012	9.24×10^{-3}	0.16	1.4784×10^{-3}
M	m_M	0.075	$75 \times 10^{-3}\ m_M$	0.20	$15 \times 10^{-3}\ m_M$

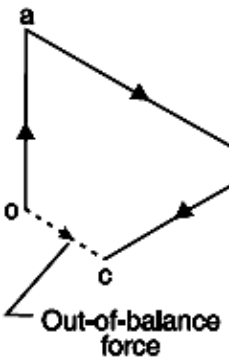

$oa = 9.24 \times 10^{-3}$

$ab = 13.86 \times 10^{-3}$

$bc = 9.24 \times 10^{-3}$

(c) Force polygon

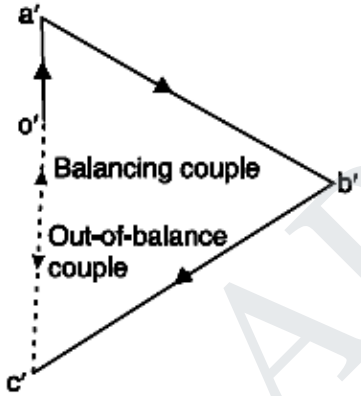

$o'a' = 0.3696 \times 10^{-3}$

$a'b' = 1.386 \times 10^{-3}$

$b'c' = 1.4784 \times 10^{-3}$

(d) Couple polygon

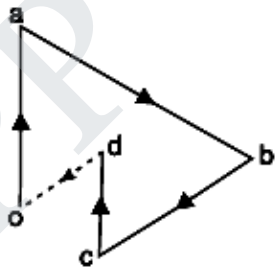

$oa = 9.24 \times 10^{-3}$

$ab = 13.86 \times 10^{-3}$

$bc = 9.24 \times 10^{-3}$

$cd = 75 \times 10^{-3} m_M$

(e) Force polygon

Out-of-balance force

The out-of-balance force is obtained by drawing the force polygon, as shown in Fig. (*c*), from the data given in Table (column 4). The resultant oc represents the out-of-balance force. Since the centrifugal force is proportional to the product of mass and radius (i.e. m.r), therefore by measurement.

Out-of-balance force = vector oc = 4.75 × 10–3 kg-m

$$= 4.75 \times 10^{-3} \times \omega^2 = 4.75 \times 10^{-3} (62.84)^2 = 18.76 \text{ N Ans.}$$

Out-of-balance couple

The out-of-balance couple is obtained by drawing the couple polygon from the data given in Table (column 6), as shown in Fig. (d). The resultant o′c′ represents the out-of balance couple. Since the couple is proportional to the product of force and distance (m.r.l), therefore by measurement,

Out-of-balance couple = vector o′c′ = 1.1 × 10–3 kg-m^2

$$= 1.1 \times 10^{-3} \times \omega^2 = 1.1 \times 10^{-3} (62.84)^2 = 4.34 \text{ N-m Ans.}$$

Amount of balancing masses and their angular positions

The vector c′o′ (in the direction from c′ to o′), as shown in Fig. (d) represents the balancing couple and is proportional to 15×10^{-3} m_M, i.e.

$$15 \times 10^{-3}\, m_M = \text{vector } c'o' = 1.1 \times 10^{-3} \text{ kg-m}^2$$

$$m_M = 0.073 \text{ kg Ans.}$$

In order to find the balancing mass (mL), a force polygon as shown in Fig. (e) is drawn. The closing side of the polygon i.e. vector do (in the direction from d to o) represents the balancing force and is proportional to 75×10^{-3} m_L. By measurement, we find that

$$75 \times 10^{-3}\, m_L = \text{vector do} = 5.2 \times 10\text{–}3 \text{ kg-m}$$

$$m_L = 0.0693 \text{ kg}$$

Draw OL in Fig. (b), parallel to vector do. By measurement, we find that the angular position of mass (m_L) is 124° from mass A in the clockwise direction.

UNIT III SINGLE DEGREE FREES VIBRATION

PART – A

1. What are the different types of vibratory motions? (May/June 2016)

1. Free vibrations

a) Longitudinal vibration, b) Transverse vibration, and c) Torsional vibration.

2. Forced vibrations, and
3. Damped vibration.

2. Define degree of freedom in Vibrating systems?

The number of independent co-ordinates required to completely define the motion of the system is known as degree of freedom of system.

3. List out the various methods of finding the natural frequency of free longitudinal vibrations. (Nov/Dec 2005)

1. Energy method,
2. Equilibrium method and
3. Rayleigh's method.

4. Distinguish between critical damping and large damping. (Nov/Dec 2006)

If system is critically damped, the mass moves back very quickly to its equilibrium position within no time. Whereas in large damping, the mass moves slowly to the equilibrium position.

5. Define critical or whirling or whipping speed of a shaft. (May/June 2016)

The speed at which resonance occurs is called critical speed of the shaft. In other words, the speed at which the shaft runs so that the additional deflection of the shaft from the axis of rotation becomes infinite is known as critical speed.

6. **Give the limit beyond which damping is detrimental. Why? (May/June 2013)**

When damping factor $\xi > 1$, the aperiodic motion is resulted. That is, aperiodic motion means the system cannot vibrate due to over damping. Once the system is disturbed, it will take infinite time to come back to equilibrium position.

7. Define damping ratio or damping factor. (Nov/Dec 2013)

It is defined as the ratio of actual damping coefficient to the critical damping coefficient.

Damping factor = $\frac{c}{c_c} = \frac{c}{2m\omega_n}$

8. Define logarithmic decrement. (May/June 2016)

Logarithmic decrement is defined as the natural logarithm of the amplitude reduction factor. The amplitude reduction factor is the ratio of any two successive amplitudes on the same side of the mean position.

9. Determine the natural frequency of mass of 10kg suspended at the bottom of the two springs (of stiffness 5N/mm and 8 N/mm) in series.

(May/June 2013)

Given:

Mass m = 10kg;

S_1= 5N/mm;

S_2= 8N/mm

Solution:

Equivalent spring stiffness S_{eq}= S_1+ S_2=5 + 8= 13N/mm

Natural Frequency $f_n = \frac{1}{2\pi}\sqrt{\frac{S_{eq}}{m}}$

$= \frac{1}{2\pi}\sqrt{\frac{13}{10}}$ = **5.74 Hz**

10. Define torsional equivalent shaft.

A shaft having variable diameter for different lengths can be theoretically replaced by an equivalent shaft of uniform diameter such that they have the same total angle of twist when equal opposing torques are applied at their ends. Such a theoretically replaced shaft is known as torsionally equivalent shaf

PART – B

1. A vertical shaft of 5 mm diameter is 200 mm long and is supported in long bearings at its ends. A disc of mass 50 kg is attached to the center of the shaft. Neglecting any increase in stiffness due to the attachment of the disc to the shaft, find the critical speed of rotation and the maximum bending stress when the shaft is rotating at 75% of the critical speed. The center of the disc is 0.25 mm from the geometric axis of the shaft. E = 200 GN/m^2.

(Nov/Dec 2014, May/June 2013)

Given:

d = 5 mm = 0.005 m;
l = 200 mm = 0.2 m;
m = 50 kg;
e = 0.25 mm = 0.25×10^{-3} m;
E = 200 GN/m^2 = 200×10^9 N/m^2

To find:

Critical speed of rotation
Maximum bending stress

Solution:

Critical speed of rotation

We know that moment of inertia of the shaft,

$$I = \frac{\pi}{64} X\, d^4 = d(0.005)^4 = 30.7 \text{ X } 10^{-12} \text{ m}^4$$

Since the shaft is supported in long bearings, it is assumed to be fixed at both ends. We know that the static deflection at the centre of the shaft due to a mass of 50 kg,

$$\delta = \frac{Wl^3}{192\, EI}$$

$$= \frac{50\, X\, 9.81(0.2)^3}{192\, X\, 200\, X\, 10^9\, X\, 30.7 \text{ X } 10^{-12}}$$

$$= \mathbf{3.33 \text{ X } 10^{-3} \text{ m}}$$

We know that critical speed of rotation (or natural frequency of transverse vibrations),

$$N_c = \frac{0.4985}{\sqrt{3.33\, X\, 10^{-3}}}$$

$$= \mathbf{8.64 \text{ r.p.s}}$$

Maximum bending stress

Let σ= Maximum bending stress in N/m^2, and

N = Speed of the shaft = 75% of critical speed = 0.75 *Nc* . . . (Given)

When the shaft starts rotating, the additional dynamic load (*W*1) to which the shaft is subjected, may be obtained by using the bending equation,

$$\frac{M}{I} = \frac{\sigma}{Y1} \text{ (or) } M = \frac{\sigma.I}{y1}$$

We know that for a shaft fixed at both ends and carrying a point load (W1) at the centre, the maximum bending moment

$$M = \frac{W1.l}{8}$$

$$\frac{W1.l}{8} = \frac{\sigma.I}{d/2}$$

$$W_1 = \frac{\sigma.I}{d/2}\left(\frac{8}{l}\right) = \frac{\sigma X 30.7 \text{ X } 10^{-12}}{\frac{0.005}{2}} \text{ x } \frac{8}{0.2}$$

$$= 0.49 \text{ x } 10^{-6}\sigma \text{ N}$$

Additional deflection due to load W1,

$$y = \frac{W1}{W}(\delta) = \frac{0.49\ X\ 10^{-6}\ \sigma}{50\ X\ 9.81} \text{ X } 3.33\text{X}10^{-3}$$

$$= 3.327 \text{ X } 10^{-12}\ \sigma$$

$$y = \frac{\pm e}{(\frac{\omega c}{\omega})^2 - 1} = \frac{\pm e}{(\frac{Nc}{N})^2 - 1}$$

$$3.327 \text{ X } 10^{-12}\ \sigma = \frac{\pm 0.25\ X 10^{-3}}{(\frac{Nc}{0.75N})^2 - 1} = \pm 0.32\ X\ 10^{-3}$$

$$\sigma = \frac{0.32\ X\ 10^{-3}}{3.327\ X\ 10^{-12}} = 0.0962\ X\ 10^{9} \text{ N/m}^2 \text{ (Taking +ve Sign)}$$

$$= 96.2 \text{ x } 10^{6} \text{ N/m}^2$$

$$\boldsymbol{\sigma = 96.2 \text{ MN/m}^2}$$

2. Derive the expression for the natural frequency of free transverse or longitudinal vibrations by using any two methods. (May/June 2016)

i. <u>Equilibrium Method</u>

Consider a constraint (i.e. spring) of negligible mass in an unstrained position, as shown in Figure

Let s = Stiffness of the constraint. It is the force required to produce unit displacement in the direction of vibration. It is usually expressed in N/m.

m = Mass of the body suspended from the constraint in kg

W = Weight of the body in newtons = m.g,

δ= Static deflection of the spring in metres due to weight W newtons, and

x = Displacement given to the body by the external force, in metres.

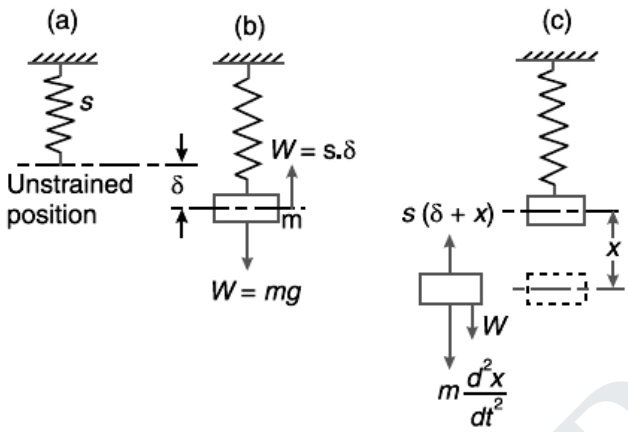

Restoring force =W - s (δ + x) =W - s.δ - s.x

= s.δ - s.δ - s. x = -s.x (since W = s.δ). . (i)

(Taking upward force as negative)

And Accelerating force = Mass × Acceleration = m x $\frac{d^2x}{dt^2}$ .... (ii)

(Taking downward force as +ve)

Equating Restoring force and accelerating force

$$m \times \frac{d^2x}{dt^2} = -s.x$$

$$m \times \frac{d^2x}{dt^2} + s.x = 0$$

$$\frac{d^2x}{dt^2} + \frac{s}{m}.x = 0 \quad . \ldots \text{(iii)}$$

We know that the fundamental equation of simple harmonic motion is

$$\frac{d^2x}{dt^2} + \omega^2 .x = 0 \quad . \ldots \text{(iv)}$$

$$\omega = \sqrt{\frac{s}{m}}$$

Time period, $t_p = \frac{2\pi}{\omega} = 2\pi\sqrt{\frac{m}{s}}$

Natural frequency, $f_n = \frac{1}{t_p} = \frac{1}{2\pi}\sqrt{\frac{s}{m}} = \frac{1}{2\pi}\sqrt{\frac{g}{\delta}}$

Taking the value of g as 9.81 m/s^2 and δ in metres,

$$f_n = \frac{1}{2\pi}\sqrt{\frac{9.81}{\delta}} = \frac{0.4985}{\sqrt{\delta}} \text{ Hz}$$

ii) <u>Energy Method:</u>

The kinetic energy is due to the motion of the body and the potential energy is with respect to a certain datum position which is equal to the amount of work required to move the body from the datum position.

In the case of vibrations, the datum position is the mean or equilibrium position at which the potential energy of the body or the system is zero. In the free vibrations, no energy is transferred to the system or from the system. Therefore the summation of kinetic energy and potential energy must be a constant quantity which is same at all the times.

$$\frac{d}{dt}(K.E + P.E) = 0$$

$$K.E = \frac{1}{2}\, m \left[\frac{dx}{dt}\right]^2;$$

$$P.E = \left[\frac{0+S.X}{2}\right] x = \frac{1}{2}\, sx^2$$

$$\frac{d}{dt}\left(\frac{1}{2}\, m \left[\frac{dx}{dt}\right]^2 + \frac{1}{2}\, sx^2\right) = 0$$

$$\frac{1}{2} m2 \left(\frac{dx}{dt}\right)\left(\frac{d^2x}{dt^2}\right) + \frac{1}{2} s2x \frac{dx}{dt} = 0$$

$$M\frac{d^2x}{dt^2} + sx = 0$$

$$\frac{d^2x}{dt^2} + \frac{s}{m}x = 0$$

The time period and the natural frequency may be obtained as discussed in the previous method.

3). A machine of mass 75 kg is mounted on springs and is fitted with a dashpot to damp out vibrations. there are three springs each of stiffness 10 N/mm and it is found that the amplitude if vibrations diminishes from 38.4 mm to 6.4 mm in two complete oscillations. Assuming that the damping force varies as the velocity, determine: 1.The resistance of the dash pot at unit velocity; 2.The ratio of the frequency of the damped vibration to the frequency of the undamped vibration; and 3.The periodic time of the damped vibration.

(May/June 2013)

Given:

m = 75 kg;
s = 10 N/mm = 10 ×10^3 N/m ;
x_1 = 38.4 mm = 0.0384 m ;
x_3 = 6.4 mm =0.0064 m

Solution:

Since the stiffness of each spring is 10 × 103 N/m and there are 3 springs, therefore total stiffness,

s = 3×10×10^3 = 30×10^3 N/m

Natural circular frequency of motion,

$$\omega_n = \sqrt{\frac{s}{m}} = \sqrt{\frac{30\ X\ 10^3}{75}} = 20\ rad/s$$

a. Resistance of the dashpot at unit velocity

Let

x_2 = Amplitude after one complete oscillation in metres, and

x_3 = Amplitude after two complete oscillations in metres.

$$\frac{x_1}{x_2} = \frac{x_2}{x_3}$$

$$\left(\frac{x_1}{x_2}\right)^2 = \frac{x_1}{x_3}$$

$$\left[\frac{x_1}{x_3}\right] = \frac{x_1}{x_2}\left(\frac{x_2}{x_3}\right) = \frac{x_1}{x_2}\left(\frac{x_1}{x_2}\right) = \left(\frac{x_1}{x_2}\right)^2$$

$$\frac{x_1}{x_2} = \left(\frac{x_1}{x_3}\right)^{1/2} = \left(\frac{0.0384}{0.0064}\right)^{1/2} = 2.45$$

c = Resistance of the dashpot in newtons at unit velocity i.e. in N/m/s,

$$\log_e\left(\frac{x_1}{x_2}\right) = \frac{2\pi a}{\sqrt{\omega_n{}^2 - a^2}}$$

$$\log_e\left(\frac{x_1}{x_2}\right) = \frac{2\pi a}{\sqrt{20^2 - a^2}}$$

$$\log_e 2.45 = \frac{2\pi a}{\sqrt{20^2 - a^2}}$$

$$0.8951 = \frac{2\pi a}{\sqrt{20^2 - a^2}}$$

Squaring on both sides:

$$0.8 = \frac{39.5a^2}{400^2 - a^2}$$

$$a^2 = 7.94$$

a=2.8

a=c/2m

c=2am=2(2.8) (75) =420N/m/s

b. Ratio of the frequency of the damped vibration to the frequency of undamped vibration

Let

f_{n1} = Frequency of damped vibration = $\frac{\omega_d}{2\pi}$

f_{n2} = Frequency of damped vibration = $\frac{\omega_n}{2\pi}$

$$\frac{f_{n1}}{f_{n2}} = \frac{\omega_d}{2\pi}\left(\frac{2\pi}{\omega_n}\right) = \sqrt{\frac{\omega_n^2 - a^2}{\omega_n}} = \sqrt{\frac{20^2 - 2.8^2}{20}} = 0.99$$

c. Periodic time of damped vibration (t_p)

$$= \frac{2\pi}{\omega_d} = \frac{2\pi}{\sqrt{\omega_n^2 - a^2}} = \frac{2\pi}{\sqrt{20^2 - 2.8^2}} = 0.32s$$

4).The mass of a single degree damped vibrating system is 7.5 kg and makes 24 free oscillations in 14 seconds when disturbed from its equilibrium position. The amplitude of vibration reduces to 0.25 of its initial value after five oscillations. Determine: 1.Stiffness of the spring 2.Logarithmic decrement, and 3.damping factor, i.e. the ratio of the system damping to critical damping.

(Nov/Dec 2012)

Given:

m = 7.5 kg

Solution:

Since 24 oscillations are made in 14 seconds, therefore frequency of free vibrations,

$$f_n = 24/14 = 1.7$$

$$\omega_n = 2\pi \times f_n = 2\pi \times 1.7 = 10.7 \text{ rad/s}$$

a. <u>Stiffness of the spring</u>

Let s = Stiffness of the spring in N/m.

$$\omega_n^2 = {}^{s}/_{m} \text{ or } s = \omega_n^2 m = 10.7^2(7.5) = 860 \text{ N/m}$$

b. <u>Logarithmic decrement</u>

Let x_1 = Initial amplitude,

x_6 = Final amplitude after five oscillations = 0.25 x_1

$$\frac{x_1}{x_6} = \left(\frac{x_1}{x_2}\right)\left(\frac{x_2}{x_3}\right)\left(\frac{x_3}{x_4}\right)\left(\frac{x_4}{x_5}\right)\left(\frac{x_5}{x_6}\right) = \left(\frac{x_1}{x_2}\right)^5$$

$$\left[\frac{x_1}{x_2} = \frac{x_2}{x_3} = \frac{x_3}{x_4} = \frac{x_4}{x_5} = \frac{x_5}{x_6}\right]$$

$$\frac{x_1}{x_2} = \left(\frac{x_1}{x_6}\right)^{1/5} = \left(\frac{x_1}{0.25x_1}\right)^{1/5} = 4^{1/5} = 1.32$$

Logarithmic decrement:

$$\delta = \log_e\left(\frac{x_1}{x_2}\right) = \log_e 1.32 = 0.28$$

c. <u>Damping factor</u>

Let c = Damping coefficient for the actual system, and

c_c = Damping coefficient for the critical damped system.

Logarithmic decrement (δ):

$$0.28 = \frac{a\,(2\pi)}{\sqrt{\omega_n^2 - a^2}} = \frac{a\,(2\pi)}{\sqrt{10.7^2 - a^2}}$$

$$0.0784 = \frac{39.5\,a^2}{114.5 - a^2} \quad \text{(Squaring on both sides)}$$

$8.977 - 0.0784a^2 = 39.5a^2$

$a^2 = 0.227$

$a = 0.476$

Damping coefficient for the actual system (c):

$a = c / 2m$ or $c = a \times 2m = 0.476 \times 2 \times 7.5 = 7.2$ N/m/s

Damping coefficient for the critical damped system (c_c):

$c_c = 2m\omega_n = 2 \times 7.5 \times 10.7 = 160.5$N/m/s

Damping Factor = c/c_c = 7.2 / 160.5 = **0.045**

5). A steel shaft 1.5 m long is 95 mm in diameter for the first 0.6 m of its length, 60 mm in diameter for the next 0.5 m of the length and 50 mm in diameter for the remaining 0.4 m of its length. The shaft carries two flywheels at two ends, the first having a mass of 900 kg and 0.85 m radius of gyration located at the 95 mm diameter end and the second having a mass of 700 kg and 0.55 m radius of gyration located at the other end. Determine the location of the node and the natural frequency of free torsional vibration of the system. The modulus of rigidity of shaft material may be taken as 80 GN/m$^{2.}$

(May/June 2016 model)

Given:

$L = 1.5$ m,

$d_1 = 95$mm,

$l_1 = 0.6$ m, $d_2 = 60$mm,

$l_2 = 0.5$m, $d_3 = 50$ mm,

$l_3 = 0.4$m, $m_A = 900$kg,

$K_A = 0.85$m,

$m_B = 700$kg,

$K_B = 0.85$m,

$C = 80 \times 10^9$N/m^2

Solution:

a. Equivalent shaft Diagram:

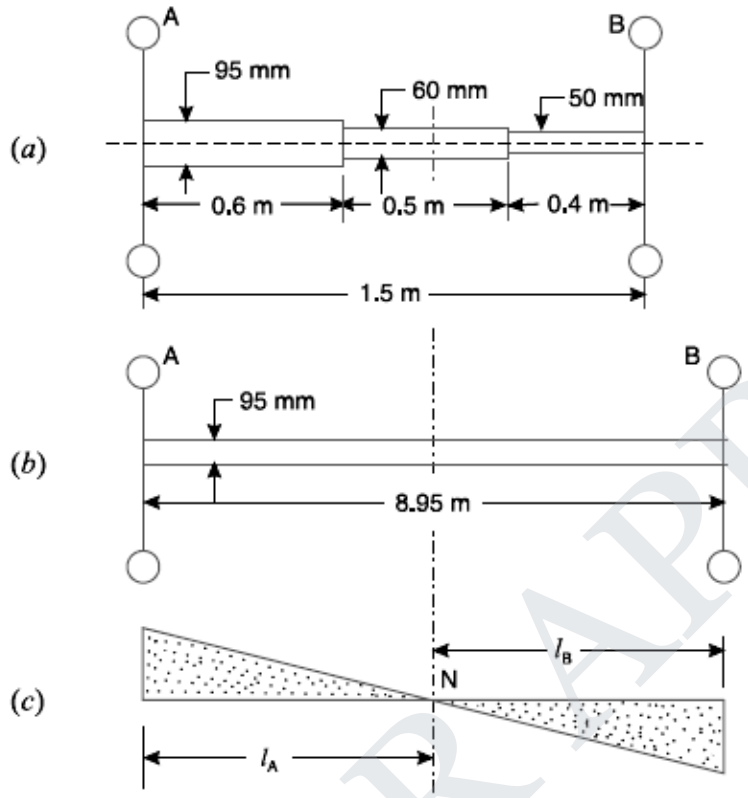

$$l = l_1 + l_2\left(\frac{d_1}{d_2}\right)^4 + l_3\left(\frac{d_1}{d_3}\right)^4$$

$$l = 0.6 + 0.5\left(\frac{0.095}{0.060}\right)^4 + 0.4\left(\frac{0.095}{0.050}\right)^4$$

$$\boldsymbol{l = 8.95m}$$

b. Location of the node:

$$I_A = m_A K_A{}^2 = 900\ (0.85)^2 = \mathbf{650Kgm^2}$$

$$I_B = m_B K_B{}^2 = 700\ (0.85)^2 = \mathbf{212Kgm^2}$$

$$I_A l_A = I_B l_B$$

$$l_A = \frac{I_B}{I_A} l_B = \frac{212}{650} l_B = 0.326 l_B$$

Finding l_B

$$\text{Also, } l_A + l_B = l = 8.95\ m$$

$$0.326\ l_B + l_B = 8.95$$

$$1.326\ l_B = 8.95$$

$$\boldsymbol{l_B = 6.75\ m}$$

Finding l_A

$$l_A + l_B = 8.95$$

$$l_A + 6.75 = 8.95$$

$$\boldsymbol{l_A = 2.20m}$$

Hence the node lies at 2.2m from flywheel A on the equivalent shaft.

c. Position of the node on the original shaft:

$$= l_A + (l_A - l_1)\left(\frac{d_2}{d_1}\right)^4$$

$$= 2.2 + (2.2 - 0.6)\left(\frac{0.06}{0.095}\right)^4$$

Position of the node on the original shaft = **0.855m**

Natural frequency of free torsional vibrations J = $\frac{\pi}{32}\ d_1^4 = \frac{\pi}{32}\ 0.095^4$= **8 x 10^{-6} m^4**

Natural frequency $f_{nA} = f_{nB}$

$$= \frac{1}{2\pi}\sqrt{\frac{C.J}{I_A\ l_A}} = \frac{1}{2\pi}\sqrt{\frac{80 \text{ X } 10^9 (8 \text{ x } 10^{-6})}{650\ (2.20)}} = \mathbf{3.37\ Hz}$$

Part C

(1) A vertical steel shaft 15 mm diameter is held in long bearings 1 metre apart and carries at its middle a disc of mass 15 kg.the eccentricity of the centre of gravity of the disc from the centre of the rotor is 0.30 mm.

The modulus of elasticity for the shaft material is 200 GN/m^2 and the permissible stress is 70 MN/m^2. Determine : 1.The critical speed of the shaft and 2. The range of speed over which it is unsafe to run the shaft. Neglect the mass of the shaft.

{ For a shaft with fixed end carrying a concentrated load (W) at the centre δ = $\frac{Wl^3}{192\,EI}$, and M = $\frac{W1.l}{8}$ where δ and M are maximum deflection and bending moment respectively}

Given:

d = 15 mm = 0.015 m;
l = 1m;
m = 15 kg;
e = 0.3 mm = 0.3 × 10^{-3} m;
E = 200 GN/m^2 = 200 × 10^9 N/m^2
σ = 70 MN/m^2 = 70 × 10^6 N/m^2

To find:

Critical speed of shaft
Range of speed

Solution:

Critical speed of rotation

We know that moment of inertia of the shaft,

$$I = \frac{\pi}{64} \times d^4 = \frac{\pi}{64}(0.015)^4 = 2.5 \times 10^{-9}\,\text{m}^4$$

Since the shaft is held in long bearings, it is assumed to be fixed at both ends. We know that the static deflection at the centre of the shaft.

$$\delta = \frac{Wl^3}{192\,EI} = \frac{15 \times 9.81 \times 1^3}{192 \times 200 \times 10^9 \times 2.5 \times 10^{-9}} = 1.5 \times 10^{-3}\,\text{m}$$

Natural frequency of transverse vibrations,.

$$f_n = \frac{0.4985}{\sqrt{\delta}} = \frac{0.4985}{\sqrt{1.5 \times 10^{-3}}} = 12.88\,\text{Hz}$$

We know that critical speed of rotation (or natural frequency of transverse vibrations),

$$N_c = 12.88 \text{ r.p.s.} = 12.88 \times 60 = 772.8 \text{ r.p.m.}$$

Range of speed

Let N_1 and N_2 = Minimum and Maximum speed respectively.

When the shaft starts rotating, the additional dynamic load ($W1$) to which the shaft is subjected, may be obtained by using the bending equation,

$$\frac{M}{I} = \frac{\sigma}{y_1} \quad \text{or} \quad M = \frac{\sigma.I}{y_1}$$

$$M = \frac{W_1.l}{8} = \frac{m_1.g.l}{8}, \quad \text{and} \quad y_1 = \frac{d}{2}, \text{ therefore}$$

$$\frac{m_1.g.l}{} = \frac{\sigma.I}{}$$

$$m_1 = \frac{8\times2\times\sigma\times I}{d.g.l} = \frac{8\times2\times70\times10^6\times2.5\times10^{-9}}{0.015\times9.81\times1} = 19 \text{ kg}$$

$$y = \frac{W_1}{W}\times\delta = \frac{m_1}{m}\times\delta = \frac{19}{15}\times1.5\times10^{-3} = 1.9\times10^{-3}\text{ m}$$

We know that

$$y = \frac{\pm e}{\left(\frac{\omega_c}{\omega}\right)^2 - 1} \quad \text{or} \quad \pm\frac{y}{e} = \frac{1}{\left(\frac{N_c}{N}\right)^2 - 1}$$

. . . (Substituting, $\omega_c = N_c$, and $\omega = N$)

$$\pm \frac{1.9\times10^{-3}}{0.3\times10^{-3}} = \frac{1}{\left(\frac{N_c}{N}\right)^2 - 1} \quad \text{or} \quad \left(\frac{N_c}{N}\right)^2 - 1 = \pm\frac{0.3}{1.9} = \pm 0.16$$

$$\left(\frac{N_c}{N}\right)^2 = 1 \pm 0.16 = 1.16 \quad \text{or} \quad 0.84$$

. . . (Taking first plus sign and then negative sign)

$$N = \frac{N_c}{\sqrt{1.16}} \quad \text{or} \quad \frac{N_c}{\sqrt{0.84}}$$

$$N_1 = \frac{N_c}{\sqrt{1.16}} = \frac{772.8}{\sqrt{1.16}} = 718 \text{ r.p.m.}$$

$$N_2 = \frac{N_c}{\sqrt{0.84}} = \frac{772.8}{\sqrt{0.84}} = 843 \text{ r.p.m.}$$

Hence the range of speed is from 718 r.p.m to 843 r.p.m.

UNIT – IV FORCED VIBRATION

PART- A

1. Define isolation factor. [Nov2012]

- It is defined as the ratio of the force transmitted (F_T) to the force applied (F) of the spring support.
- It is also known as "Transmissibility ratio".
- It is denoted by the Greek letter "ε" (epsilon).

2. Write down the expression for amplitude of forced vibration. [Nov2012]

The amplitude of the forced vibration is given by

$$x_{\max} = \frac{F}{\sqrt{(C^2\omega^2 + (S - m\omega^2)^2)}}$$

Where F = Centrifugal force or the static force,
C = Damping Resistance,
ω = Angular velocity,
m = Mass of the body,
S = Stiffness.

3. Define step input and harmonic forcing function. [Nov 2013]

- It is defined as the constant force applied to the mass of a vibrating system.
- The equation of motion is $m\ddot{x} + Sx = F$
- The harmonic forcing function is given by $F(t) = F_o \sin(\omega t)$

4. Define magnification factor as applied to forced vibration. [May 2014, May 2016]

- It is the ratio of maximum displacement of the forced vibration (x_{max}) to the deflection due to the static force F (x_o).
- It is also known as dynamic magnifier.

5. List out the sources of the excitation in forced vibration. [May 2014]

a) Periodic forces like harmonic and non-harmonic,
b) Impulsive forces, and
c) Random forces like seismic waves.

6. Define the term "Logarithmic decrement" as applied to damped vibration. [Nov 2014]

It is defined as the natural logarithm of the amplitude reduction factor. The amplitude reduction factor is the ratio of any two successive amplitudes on the same side of the mean position.

7. Classify vibration. [Nov 2015]

Vibration is classified into two types:

1. Free vibration, and
2. Forced vibration.

Further the free vibration is classified into

a) Longitudinal vibration,
b) Transverse vibration, and
c) Torsional vibration.

8. Define whirling speed. (Nov/Dec 2012)

The speed at which the shaft runs so that the additional deflection of the shaft from the axis of rotation becomes infinite is known as whirling or critical speed.

Mathematically,

$$\omega_n = \omega_C = \sqrt{\frac{S}{m}} = \sqrt{\frac{g}{\delta}}$$

9. Define damping ratio. (May/June 2014)

The ratio of the actual damping coefficient (C) to the critical damping coefficient (C_c) is known as damping ratio or damping factor.

Mathematically,

$$\text{Damping factor} = \frac{C}{C_C} = \frac{C}{2m\omega_n}$$

10. What is meant by forced vibration? [May 2016]

When the body vibrates under the action of external force, then the body is said to be under forced vibration. The external force applied to the body is periodic disturbing force created by unbalance.

PART – B

1. **A single cylinder vertical petrol engine of total mass of 200Kg is mounted upon a steel chassis frame and causes a vertical static deflection of 2.4mm. the reciprocating parts of the engine has a mass of 9Kg and move through a vertical stroke of 160mm with SHM. A dashpot is provided whose damping resistance is directly proportional to the velocity and amounts to 1.5 KN/mm/s , calculate at steady state**
   a) **The amplitude of forced vibrations at 500 rpm engine speed, and**
   b) **The speed of the driving shaft at which resonance will occur.**

[Nov 2015, May 2016]

Given data

Mass of petrol engine m = 200 kg,
Deflection δ = 2.4 mm,
Mass of reciprocating parts m_1 = 9 kg,
Stroke l = 160 mm,
Damping resistance C = 1 N/mm/s,
Speed N = 500 r.p.m.

To find

a) The amplitude of forced vibrations at 500 rpm engine speed (x_{max}), and
b) The speed of the driving shaft at which resonance will occur (N).

Solution

a) Determination of x_{max}

The amplitude of the forced vibration is given by

$$x_{max} = \frac{F}{\sqrt{(C^2\omega^2 + (S - m\omega^2)^2)}}$$

Where

F = Centrifugal force or the static force,
$F = m_1\ \omega^2 r = 9 \text{ X } 52.3^2 \text{X}(l/2) = 24.6\text{X}10^3\text{X}(160/2)$
F = 1.97 MN
C = Damping Resistance = 1 N/mm/s
ω = Angular velocity = (2πN/60) = 52.3 rad/s
m = Mass of the body = 9 kg
S = Stiffness = (m . g)/ δ = 981 N/mm

Substituting all the values in the above equation, we get

$\mathbf{X_{max}}$ **= 6 mm**

b) Determination of N

Let N be the speed of the driving shaft at which resonance occurs in r.p.m.

wkt, the angular speed at which resonance occurs

$$\omega_n = \omega_C = \sqrt{\frac{S}{m}} = \sqrt{\frac{g}{\delta}}$$

$$\omega_n = \omega_C = \sqrt{\frac{981X10^3}{240}} = 63.9 rad/s$$

wkt,

$$\frac{2\pi N}{60} = 63.9$$

N = 610 r.p.m

Result

a) The amplitude of forced vibrations at 500 rpm engine speed (x_{max}) = 6 mm, and

b) The speed of the driving shaft at which resonance will occur (N) = 610 rpm.

2. A mass of 10 kg is suspended from one end of helical spring, the other end is being fixed. The stiffness of the spring is 10 N/mm. The viscous damping causes the amplitude to decrease to one-tenth of the initial value in four complete oscillations. If a periodic force of 150 Cos 50t (N) is applied at the mass in the vertical direction, find the amplitude of the forced vibrations. What is its value of resonance? [Nov 2014]

Given data

Mass m = 10 kg,

Stiffness δ = 10 N/mm = $10x10^3$ N/m

$X_5 = x_1 /10$ (since amplitude decreases to one-tenth of initial value in 4 complete oscillations).

Periodic force F_x = 150 Cos 50 t = F Cos ωt

Static force F = 150 N,

Angular velocity ω = 50 rad/s.

To find

a). Amplitude of the forced vibrations (x_{max}), and

b). Resonance value (x_{max})

Solution

wkt, the angular speed at which resonance occurs

$$\omega_n = \omega_C = \sqrt{\frac{S}{m}} = \sqrt{\frac{g}{\delta}}$$

$$\omega_n = \omega_C = \sqrt{\frac{10X10^3}{10}} = 31.6 rad/s$$

Since the amplitude decreases to 1/10th of the initial value in 4 complete oscillations, therefore the ratio of initial amplitude (x_1) to the final amplitude after 4 complete oscillations (x_5) is given by

$$\frac{X_1}{X_5} = \frac{X_1}{X_2}.\frac{X_2}{X_3}.\frac{X_3}{X_4}.\frac{X_4}{X_5} = \left(\frac{X_1}{X_2}\right)^4 \quad \text{since } \frac{X}{X_2} = \frac{X_2}{X_3}$$

$$\frac{X_1}{X_2} = \left(\frac{X_1}{X_5}\right)^{\frac{1}{4}} = \left(\frac{X_1}{\frac{X1}{1/10}}\right)^{\frac{1}{4}} = (10)^{\frac{1}{4}}$$

$$\frac{X_1}{X2} = 1.78$$

wkt

$$\log_e\left(\frac{X_1}{X_2}\right) = a * \frac{2\pi}{\sqrt{(\omega_n{}^2 - a^2}}$$

$$\log_e 1.78 = \frac{2\pi a}{\sqrt{(31.6^{\ 2} - a^2}}$$

$$0.576 = \frac{2\pi a}{\sqrt{1000 - a^2}}$$

a = 2.87

wkt

$a = c/2m$

c = 2ma = 2 X 10X 2.87

c = 57.74 N/m/s

Deflection of the system produced by the static force F

$$X_0 = \frac{F}{S} = \frac{150X10^{-3}}{10} = 0.015m$$

wkt , amplitude of the forced vibration is

$$x_{max} = \frac{F}{\sqrt{(C^2\omega^2 + (S - m\omega^2)^2)}}$$

Substituting the values we get **x_{max} = 9.8mm**

b) Determination of x_{max} at resonance

wkt , the amplitude of forced vibrations at resonance,

$$x_{max} = X_0 \frac{S}{c\omega_n}$$

$$= 0.015 * \frac{10X10^3}{57.54X31.6}$$

$$\mathbf{x_{max} = 82.2mm}$$

Result

Amplitude of the forced vibration is 9.8mm,

Amplitude of the forced vibration at resonance is 82.2mm.

3). A machine part of mass 2kg vibrates in a viscous medium. Determine the damping coefficient when a harmonic exciting force of 25N results in resonant amplitude of 12.5mm with a period of 0.2seconds. if the system is excited by a harmonic force of frequency 4Hz what will be the percentage increase in the amplitude of vibration when damper is removed as compared with that damping.

[NOV 2014]

Given data

Mass = 2 Kg

Force = 25 N

Resonant X_{max} =12.5mm

Time period t_p = 0.26

Frequency f = 4 Hz.

To find

Damping coefficient (C)

Percentage increase in amplitude.

Solution

a). Determination of C

Let C = damping Coefficient in N/m/s

wkt, Natural circular frequency of the exciting force

$$\omega_n = \frac{2\pi}{t_p} = \frac{2\pi}{0.2} = 31.42 \text{ rad/s}$$

wkt, the maximum amplitude of vibration at resonance

$$x_{max} = \frac{F}{c\omega_n}$$

$$0.0125 = \frac{25}{c*31.42}$$

c = 63.7 N/m/s

b**). Determination of % increase in amplitude**

Exciting frequency (f) = 4Hz

Circular frequency ω = 2πf = 25.14 rad/s

wkt, the maximum amplitude of vibration with damping,

$$x_{max} = \frac{F}{\sqrt{(C^2\omega^2 + (S - m\omega^2)^2)}}$$

$$= \frac{25}{\sqrt{((63.7^2 X 25.14^2) + ((2x31.4^2 - 2x25.14^2)^2)}}$$

x_{max} = 0.0143 m

The maximum amplitude of vibration when damper is removed

$$x_{max} = \frac{F}{m[\omega_n^{\ 2} - \omega^2]}$$

= 0.035m

Therefore, percentage increase in amplitude = $\frac{35.2 - 14.3}{14.3} = 1.46$ or

= 146%

Result

Damping coefficient is 63.7 N/m/s

Percentage increase in amplitude is 146%

4). A machine has a total mass of 90Kg and unbalanced reciprocating parts of mass 2Kg which moves through a vertical stroke of 100mm with SHM. The machine is mounted on four springs. The machine is having only one degree of freedom and can undergo vertical displacement only. Calculate

(i). The combined stiffness is the force transmitted to the foundation is one thirteenth of the applied force. Neglect damping and take the speed of rotation of the machine crank shaft as 1000 r.p.m. when the machine is actually supported on the springs, it is found that the damping reduces the amplitude of the successive free vibrations by 30%. Find (ii). The force transmitted to the foundation at 900 r.p.m. [NOV 2015]

Given data

Total mass of machine (m_1) = 90Kg

Unbalanced reciprocating parts mass(m_2) = 2 Kg

Stroke length (l) = 100mm = 0.1m

Transmissiblity (or) isolation factor (ε) = 1/30

Speed (N) = 1000 r.p.m

Angular velocity (ω) = $\frac{2\pi N}{60} = 104.7 rad/s$

To find

i) Combined stiffness of springs (S),

ii) Force transmitted to the foundation at 1000r.p.m,

Solution

(i) Determination of stiffness of the spring

Transmissibility $\varepsilon = \dfrac{\omega_n^{\ 2}}{\omega^2 - \omega_n^{\ 2}}$

$$\frac{1}{30} = \frac{\omega_n^{\ 2}}{104.7^2 - \omega_n^{\ 2}}$$

$104.7^2 - \omega_n^{\ 2} = 30\ \omega_n^{\ 2}$

$31\ \omega_n^{\ 2} = 104.7^2$

$\omega_n = 18.8$ rad/s

wkt,

$$\omega_n = \sqrt{\frac{S}{m_1}} = \sqrt{\frac{S}{90}}$$

$S = 18.8^2 \times 90$

$S = 31.78 \times 10^3$ N/m

(ii) Determination of F_T

Since the damping reduces the amplitude of successive free vibrations by 30% . therefore the final amplitude of vibration

$x_2 = 0.70x_1$

$$\log_e\left(\frac{X_1}{X_2}\right) = a * \frac{2\pi}{\sqrt{(\omega_n^{\ 2} - a^2}}$$

$$\log_e\left(\frac{X_1}{0.704}\right) = \frac{2\pi a}{\sqrt{(18.8^2 - a^2}}$$

$$\log_e(1.42) = \frac{2\pi a}{\sqrt{353.4 - a^2}}$$

Solving we get

a = 0.45

wkt,

$c = a*2m_1 = 0.45 *2*90$

c = 81 N/m/s

critical damping coefficient $c_c = 2m\omega_n = 2 \times 90 \times 18.8$

c_c= 3384 N/m/s

Therefore actual value of transmissibility ratio (ε)

$$\varepsilon = \frac{\sqrt{1+\left(\frac{2c\omega}{c_c\omega_n}\right)^2}}{\sqrt{\left(\frac{2c\omega}{c_c\omega_n}\right)^2+\left(1-\frac{\omega^2}{\omega_n^{\,2}}\right)^2}}$$

$$\varepsilon = \frac{1.104}{25.08} = 0.044$$

wkt, the maximum unbalanced force on the m/c due to reciprocating parts

$F = m^2\omega^2 r = 2 \times 104.7^2 \times (0.1/2)$

F = 1096.2 N

Force transmitted to the foundation

$F_T = \varepsilon F = 0.044 \times 1096.2$

F_T = 48.23 N

RESULT:

i) Combined stiffness of springs is 31780 N/m

ii) Force transmitted to the foundation at 1000r.p.m is 48N.

5). Derive the equation of vibration isolation factor or transmissibility ratio [MAY 2016]

The ratio of the force transmitted (F_T) to the force applied (F) is known as the transmissibility ratio of the spring support.

The force transmitted to the foundation consists of the following two forces:

(i) spring force or elastic force = $S.x_{max}$ and

(ii) Damping force = $c\omega x_{max}$

The forces are perpendicular to each other therefore

$$F_T = \sqrt{(S.x_{max})^2 + (c\omega x_{max})^2}$$

$$= x_{max}\sqrt{(S^2 + (c\omega)^2)}$$

Transmissibility ratio or isolation factor is

$$\varepsilon = \frac{F_T}{F} = \frac{x_{max}\sqrt{S^2+(c\omega)^2}}{F}$$

wkt, $x_{max} = x_0 * D = \frac{F}{S} * D$

$$\varepsilon = \frac{D}{S}\sqrt{S^2 + c^2\omega^2}$$

$$\varepsilon = D\sqrt{1+\frac{c^2\omega^2}{S^2}} \qquad = D\sqrt{1+\left(\frac{2c\omega}{c_c\omega_n}\right)^2} \qquad \text{since } \frac{c\omega}{S} = \frac{2c\omega}{c_c\omega_n}$$

wkt the magnification factor

$$D = \frac{1}{\sqrt{\left(\frac{2c\omega}{c_c\omega_n}\right)^2 + \left(1 - \frac{\omega^2}{\omega_n^2}\right)^2}}$$

Substitute the magnification factor in 'ε' we get

$$\varepsilon = \frac{\sqrt{1 + \left(\frac{2c\omega}{c_c\omega_n}\right)^2}}{\sqrt{\left(\frac{2c\omega}{c_c\omega_n}\right)^2 + \left(1 - \frac{\omega^2}{\omega_n^2}\right)^2}}$$

when the damper is not provided , then c=0 and

$$\varepsilon = \frac{1}{1 - \left(\omega/\omega_n\right)^2}$$

from above, when $\left(\omega/\omega_n\right) > 1$ ε is negligible i.e there is a phase difference of 180 degree between the transmitted and the disturbing force (Fcosωt).

PART C

(1) Define ' Dynamic Magnifier' and derive the relationship for the dynamic magnifier.

It is the ratio of **maximum displacement of the forced vibration (x_{max}) to the deflection due to the static force F (x_0).** We have proved in the previous article that the maximum displacement or the amplitude of force vibration,.

$$x_{max} = \frac{x_o}{\sqrt{\frac{c^2.\omega^2}{s^2} + \left(1 - \frac{\omega^2}{(\omega_n)^2}\right)^2}}$$

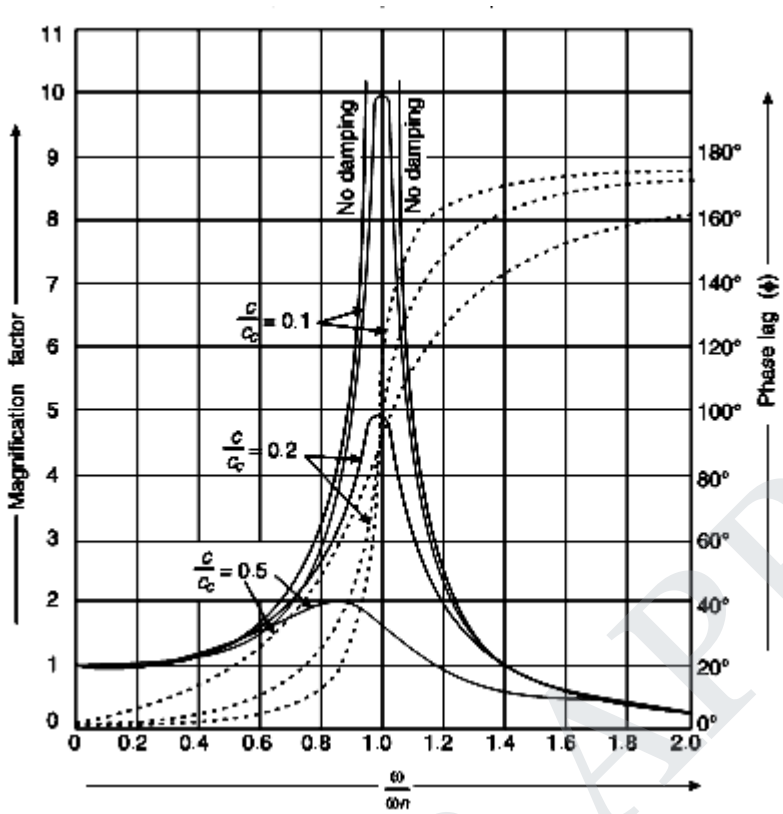

Fig : Relationship between magnification factor and phase angle for different values of ω/ω_n.

Magnification factor or Dynamic magnifier,

$$D = \frac{x_{max}}{x_o} = \frac{1}{\sqrt{\frac{c^2.\omega^2}{s^2} + \left(1 - \frac{\omega^2}{(\omega_n)^2}\right)^2}} \quad \ldots (i)$$

$$= \frac{1}{\sqrt{\left(\frac{2c.\omega}{c_c.\omega_n}\right)^2 + \left(1 - \frac{\omega^2}{(\omega_n)^2}\right)^2}}$$

$$\ldots \left[\because \frac{c.\omega}{s} = \frac{2c.\omega}{2m \times \frac{s}{m}} = \frac{2c.\omega}{2m(\omega_n)^2} = \frac{2c.\omega}{c_c.\omega_n}\right]$$

The magnification factor or dynamic magnifier gives the factor by which the static deflection produced by a force F $(i.e.\ x_o)$ must be multiplied in order to obtain the maximum amplitude of the forced vibration $(i.e.\ x_{max})$ by the harmonic force F cos ω.t.

$$x_{max} = x_o \times D$$

From the Fig shows the relationship between the magnification factor (D) and

phase angle ϕ for different value of ω/ω_n. and for the values of damping factors $c/c_c = 0.1, 0.2$ and 0.5.

Notes: 1. If there is no damping (i.e. if the vibration is undamped),then c= 0,In that case, magnification factor

$$D = \frac{x_{max}}{x_o} = \frac{1}{\sqrt{\left(1 - \frac{\omega^2}{(\omega_n)^2}\right)^2}} = \frac{(\omega_n)^2}{(\omega_n)^2 - \omega^2}$$

2. At resonance $\omega = \omega_n$.therefore magnification factor

$$D = \frac{x_{max}}{x_o} = \frac{s}{c.\omega_n}$$

UNIT V MECHANISM FOR CONTROL
PART A

1. Define sensitiveness of governors. [NOV/DEC 2014]

The sensitiveness is defines as the ratio of the mean speed to the difference between the maximum and minimum speeds.

Sensitiveness = N/N1 – N2 = 2(N1 + N2)/ (N1 – N2)

N1 – Max Speed : N2 – Min Speed

2. What is meant by isochronous condition in governors? [MAY/JUNE 2013]

A governor with zero range of speed is known as an isochronous governor. Actually the isochronisms are the stage of infinite sensitivity. i.e., when the equilibrium speed is constant for all radii of rotation of rotation of the balls within the working range, the governor is said to be in isochronisms.

3. What is meant by hunting? [NOV/DEC 2015]

The phenomenon of continuous fluctuation of the engine speed above and below the mean speed is termed as hunting. This occurs in over-sensitive governors.

4. Differentiate the functions of flywheel and governor. [APRIL/MAY 2015]

S.no	Flywheels	Governors
1	The function of flywheel is to reduce the fluctuations of speed during a cycle above over and below the mean value for constant load from the prime mover.	Its function is to control the mean speed a period for output load variations
2	It works continuously from cycle to cycle.	Its works intermittently i.e. only when there is change in the load.
3	It has no influence on mean speed of the prime mover.	It has no influence over cyclic speed Fluctuations

5. Define coefficient of sensitiveness in governors

It is the ratio between range of speed and mean speed

Coefficient of sensitiveness = range of speed/ mean speed = $\frac{N_1 - N_2}{N}$

6. What is meant by gyroscopic couple? [MAY/JUNE 2014]

If a body having moment of inertia I and rotating about its own axis at ω rad/s is also caused to turn at ω_p rad/s about an axis perpendicular to the axis of spin, then it experiences a gyroscopic couple of magnitude (1.ω. ωp) in an axis which is perpendicular to both the axis of spin and axis of precession.

7. Why there is no effect of the gyroscopic couple acting on the body of a ship during rolling?

For the effect of gyroscopic couple to occur, the axis of procession should always be perpendicular to the axis of the spin. In case of rolling of a ship, the axis of precession is always parallel to the axis of spin for all positions. Hence there is no effect of the gyroscopic Couple acting on a body of the ship during rolling.

8. **Discuss the effect of the gyroscopic couple on a 2 wheeled vehicle when taking a turn. [NOV/DEC 14, 15]**

The gyroscopic couple will act over the vehicle outwards. The tendency of this couple is to overturn the vehicle in outward direction.

9. **The engine of an aero plane rotates in clockwise direction when seen from the tail end and the aero plane takes a turn to the left. What will be the effect of the gyroscopic couple on the aero plane? [MAY/JUNE 2016]**

The effect of gyroscopic couple will be to raise the nose and dip the tail.

10. **What is the effect of friction on the governors? [NOV/DEC 2005]**

The effect of friction on the governors is to increase the range of speed , governor effort and power of the governor

PART B

1) A spring loaded governor of the hartnell type has equal arms. The balls rotate in a circle of 15 cm diameter when the sleeve is in the mid position and the ball arms are vertical. The equilibrium speed for this position is 500rpm.the maximum sleeve movement is to be 3cm and the maximum variation of speed taking in account the friction to be ±5% of the mid position speed. The mass of the sleeve is 5kg and the friction force may be considered to arise out of an equivalent 3kg mass at the sleeve. The power of the governor must be sufficient to overcome the friction by 1% change of speed either way from mid position. Determine:

i) The rotating masses

ii) The spring stiffness

iii) The initial compression of the spring, neglect the obliquity effect of arms. **[APRIL/MAY 2015]**

Given data:

x=y,d=150mm=0.15m, N = 500 rpm, h=30mm, M=5kg, F=3*9.81= 29.43 N

To find:

Mass (m),spring stiffness(S), initial compression of the spring.

Solution:

(i) Mass of each rotating balls (m)

$\omega = 2\pi N/60$

$= 2\pi(500)/60$

= 52.34 rad/sec

Since the change of speed at mid position to overcome friction is 1%.

Minimum speed at mid position.

$\omega_1 = \omega - 0.01\omega = 0.99\omega$

$= 0.99\ \omega = 0.99(52.34) = 51.81$

Maximum speed at mid position

$\omega_1 = \omega + 0.01\omega = 1.01\omega$

$= 1.01\ \omega = 1.01(52.34) = 52.86$

Therefore centrifugal force at the minimum speed

$F_{c1} = m\omega^2 r = m(51.81)^2(0.075)$

$= 201.32\ m$

$F_{c2} = m\omega^2 r = m(52.86)^2(0.075)$

$= 209.56\ m$

For minimum speed at mid position,

$S + (M.g - F) = 2\ F_{c1}\ (x/y)$

$S + [(5*9.81)-29.43] = 2(201.32\ m)(1)$ [since x/y =1]

$S = 402.64\ m - 19.62$ ----------[1]

For maximum speed at mid position,

$S + (M.g + F) = 2 F_{c1} (x/y)$

$S + [(5*9.81)+29.43] = 2(209.56 m)(1)$ [since x/y =1]

$S = 419.12 m – 78.48$ ----------[2]

By solving [1] & [2]

$S = 402.64 m – 19.62$

$S = 419.12 m – 78.48$

$=-16.48 m + 58.68$

$58.68 = 16.48 m$

$m = 3.56 kg$

(ii) Spring stiffness (s)

Since maximum speed variation, considering friction is ± 5% of the mid position speed.

Therefore minimum speed considering friction

$\omega`_1 = \omega – 0.05\omega = 0.995\omega$

$=0.95 (52.34)=49.72$

Maximum speed considering friction

$\omega`_2 = \omega + 0.05\omega = 1.05\omega$

$=1.05(52.34)=54.96$

Centrifugal force at minimum speed

$F_{c1}` = m \omega`_1^2 r_1$

$r_1 = r – h_1(x/y)$

$=0.075-(0.03/2)(1)$

$=0.06$

$F_{c1}` = m \omega`_1^2 r_1 = 3.56(49.72)^2(0.06)$

$=529.81N$

Centrifugal force at maximum speed

$F_{c2}` = m \omega`_2^2 r_2$

$r_2 = r + h_2(x/y)$

$=0.075+(0.03/2)(1)$

$=0.09$

$F_{c2}` = m \omega`_2^2 r_2 = 3.56(54.76)^2(0.09)$

$=964N$

For minimum speed considering friction

$S_1 + (M.g - F) = 2 F_{c1}` (x/y)$

$S_1+[(5*9.81)-29.43] =2(529.81)(1)$

$S_1+19.62 =1059.62$

$S_1 =1040 N$

For minimum speed considering friction

$S_1 + (M.g - F) = 2 F_{c1}` (x/y)$

$S_1+[(5*9.81)-29.43] = 2(529.81)(1)$

$S_1+19.62 = 1059.62$

$S_1 = 1040$ N

For maximum speed considering friction

$S_2 + (M.g + F) = 2 F_{c1}` (x/y)$

$S_2+[(5*9.81)+29.43] = 2(964)(1)$

$S_2+78.48 = 1928$

$S_2 = 1849.52$ N

Stiffness of the spring (S)

$S = (S_2 - S_1)/h$

$=(1849.52 – 1040)/0.03$

$=26984$ N/m = 26.98KN/m

iii) initial compression of the spring

$= S_1/S$

$=1040 / 26.98*10^3$

$=0.0385$ m

RESULT:

(i) m = 3.56 kg.

(ii) S = 26.98 KN/m

(iii) $S_1/S=38.5$mm

2). A porter governor has all four arms 300mm long. The upper arms are pivoted on the axis of rotation and the lower arms are attached to the sleeve at a distance of 35mm from the axis. Each ball has a mass of 7kg and the sleeve mass is 55kg.If the extreme radii of rotation of the balls are 200mm and 250mm,determine the range of speed of the governor? [NOV/DEC 2015,May/June 2016]

Given data:

AB=BC=300mm,

CE = 35mm,

m= 7kg,

M = 55kg

r_1=200mm,

r_2=250mm

Solution:

Minimum speed when r_1= 200mm

From the geometry

$h_1 = AD = \sqrt{AB^2 - BD^2}$

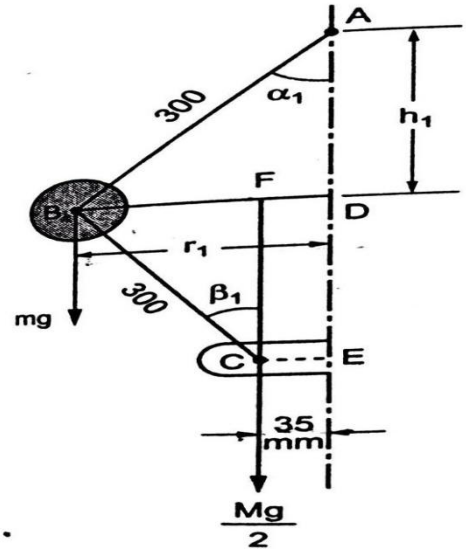

$=\sqrt{0.3^2 - 0.2^2}$

=0.224 m

BF = BD – FD

=200-35

=165 mm

CF $=\sqrt{BC^2 - BF^2}$

$=\sqrt{0.3^2 - 0.165^2}$

= 0.25m

From Δ le ABD

Tan α_1 $= \frac{BD}{AD} = \frac{0.2}{0.224}$

= 0.893

Tan α_1 $= \frac{BF}{CF} = \frac{0.165}{0.25}$

= 0.66

q $= \frac{\tan\beta}{\tan\alpha} = \frac{0.66}{0.25}$

= 0.739

The minimum speed is given by

N^2_1 $= \frac{m+M/2(1+q)}{m}(895/h_1)$

$= \frac{7+55/2(1+0.739)}{7}(895/0.224)$

= 31292.2

N_1 = 176.89 rpm

For Maximum speed

From the geometry

h_2 = AD $=\sqrt{AB^2 - BD^2}$

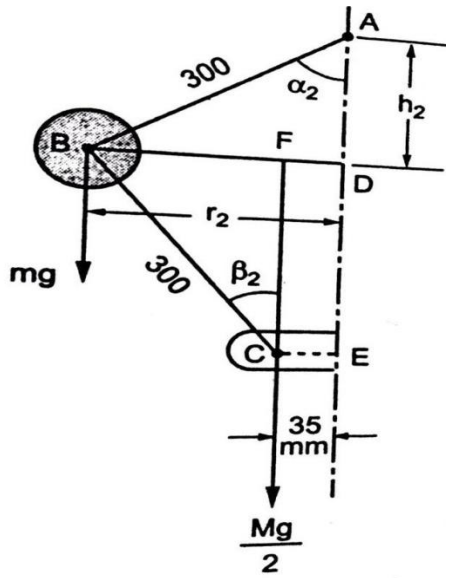

(b) Maximum position

$=\sqrt{0.3^2 - 0.25^2}$

=0.166 m

BF = BD – FD

=250-35

=215 mm

CF $=\sqrt{BC^2 - BF^2}$

$=\sqrt{0.3^2 - 0.215^2}$

= 0.209m

From Δ le ABD

Tan α_1 $= \frac{BD}{AD} = \frac{0.25}{0.166}$

= 1.506

Tan β_1 $= \frac{BF}{CF} = \frac{0.215}{0.209}$

= 1.029

q $= \frac{\tan\beta}{\tan\alpha} = \frac{1.029}{1.506}$

= 0.683

The maximum speed is given by

N^2_2 $= \frac{m+M/2(1+q2)}{m}$ $(895/h_2)$

$= \frac{7+55/2(1+0.683)}{7}$ (895/0.166)

N_2 = 202.59 rpm

Range of speed

= max.speed – min.speed

= 202.58 – 176.89

= 25.69 rpm

3. A proell governor has equal arms of length 250mm.the upper and lower ends of the arms are pivoted on the axis of the governor. The extension arms of the lower links are each 90mm long and parallel to the axis. When the radii of rotation of the balls are 130mm and 175mm. The mass of each ball is 8.5 kg and the mass of the central load is 85 kg. Determine the range of speed of the governor [MAY 2014]

Given data:

AB=BC=250mm,
EB=90mm,
r_1=130mm,
r_2=175mm,
m=8.5kg,
M=85kg

For minimum speed when r_1=130mm

h_1 = AD =$\sqrt{AB^2 - BD^2}$

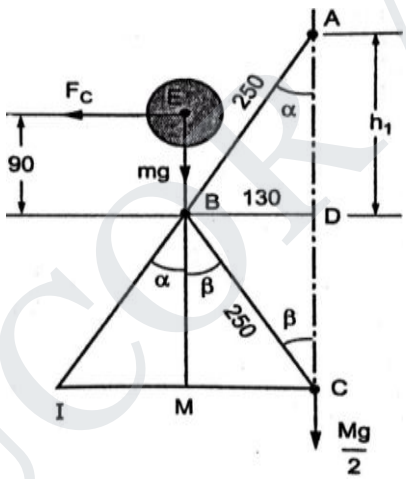

$=\sqrt{0.25^2 - 0.13^2}$

=0.2135m

BM=DC=AD=0.2135m

α=β so q = 1

N^2_1 $=\frac{BM}{EM}[\frac{m+M}{m}]$ (895/h_1)

$=\frac{0.2135}{0.3035}[\frac{8.5+85}{8.5}]$ (895/0.2135)

=32438.2

N_1 =180.1 rpm

For maximum speed when r_2=175mm

h_2 = AD =$\sqrt{AB^2 - BD^2}$

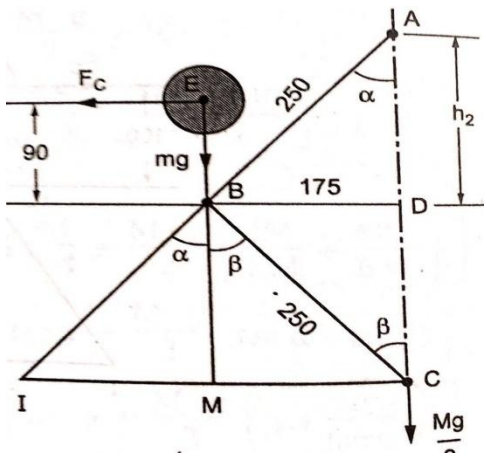

$=\sqrt{0.25^2 - 0.175^2}$

=0.1785m

BM=DC=AD=0.1785m

EM=EB+BM

=0.09+0.1785

=0.2685m

α=β so q = 1

N^2_2 $=\frac{BM}{EM}\left[\frac{m+M}{m}\right]$ $(895/h_2)$

$=\frac{0.1785}{0.2658}\left[\frac{8.5+85}{8.5}\right]$ (895/0.1785)

=36666.67

N_1 =191.48 rpm

Range of speed = maximum speed – minimum speed

=191.48-180.1

=11.38rpm

4) The turbine rotor of a ship has a 2.4 tonnes and rotates at 1750 rpm when viewed from the left. The radius of gyration of the rotor is 300mm.Determine gyroscopic couple and its effect when

(i)The ship turns right at a radius of 250m with a speed of 22kmph.

(ii) The ship pitches with the bow rising at an angular velocity of 0.85 rad/sec.

(iii) The ship rolls at an angular velocity of 0.15rad/sec [NOV/DEC 2013]

Given data:

m = 2.4 t = 2400kg, N=1750rpm , k= 300mm , v= 22kmph = 22*(5/18)=6.11m/s

R = 250m.

Solution:

Mass moment of inertia I = mk^2

$= 2400(0.3)^2$

$= 216$ kg-m^2

Angular velocity(ω)

$$\omega = 2\pi N/60$$

$$\omega = 2\pi(1750)/60$$

$= 183.26$ rad/sec

1. When ship takes right turn

Angular velocity of precession (ω_p)

$\omega_p = V / R = 6.11 / 250$

$= 0.0244$ rad /sec

Gyroscopic couple (C)

$C = I\,\omega\,\omega_p$

$=216(183.26)(0.0244)$

$=967.44$N-m

The effect is to lower the bow (fore) and raise the stern (aft)when the ship turns right.

2. When ship pitches with bow rising

Angular velocity of precession (ω_p)

$\omega_p = 0.85$ rad/sec

Gyroscopic couple (C)

$C = I\,\omega\,\omega_p$

$=216(183.26)(0.85)$

$=33.64$N-m

The effect of the reaction couple when the bow is raising is to turn the ship towards right

3. When ship rolls

Angular velocity of precession(ω_p)

$\omega_p = 0.15$ rad/sec

Gyroscopic couple (C)

$C = I\,\omega\,\omega_p$

$=216(183.26)(0.15)$

$=5937.6$N-m

As the axis of spin is always parallel to the axis of precession for all position, there is no gyroscopic effect on the ship.

5).The driving axle of a locomotive with two wheels has a moment of inertia of 175 kg/m^2.The diameter of the wheel treads is 1.7m and the distance between wheel centers is 1.5m. When the locomotive is travelling on a level track @ 88km/hr, defective ballasting causes one wheel to fall 5mm and rise again in a total time of

0.1 sec, if the displacement of the wheel takes place with simple harmonic motion. Find

1. Gyroscopic couple setup

2. The reaction between the wheel and rail due to this couple.

[April/May 2015]

Given data:

I = 175kg/m^2 ,d_w = 1.7m, x=1.5m, v = 88km/hr =88*(5/18) =24.44m/s t_p=0.1 sec fall = 0.005mm

Solution:

1. Gyroscopic couple setup(C)

Angular velocity (ω)

$= V / r_w$

=24.44 / 0.85

=28.75 rad/sec

Since the defective ballasting causes one wheel to fall 5mm and rise again in a total time of 0.1sec

Therefore amplitude A = ½(fall)= ½(rise)

= ½(0.005)

=0.0025 mm

Maximum velocity while falling

V_{max}=(2π/tp)A

=(2π/0.1)0.0025

=0.157 m/s

Gyroscopic couple setup (C)

$C = I\,\omega\,\omega_p$

=175(28.75)(0.105)

=528.28 N-m

2. Reaction between the wheel and rail due to the gyroscopic couple.

P = C/x = 528.18 / 1.5

= 352.2 N

PART C

(1). A spring loaded governor is shown in figure the two balls,each of mass 6 kg, are connected across by two springs. An auxiliary spring B provides an additional force at the sleeve through the medium of a lever which pivots about a fixed centre at its left hand end. In the mean position, the radius of the governor balls is 120 mm and the speed is 600 r.p.m. the tension in each spring is then 1 kN. Find the tension in the spring B for this position.

When the sleeve moves up 15 mm, the speed is to be 630 r.p.m.Find the necessary stiffness of the spring B, if the stiffness of each spring A is 10 kN/m.Neglect the moment produced by the mass of the balls.

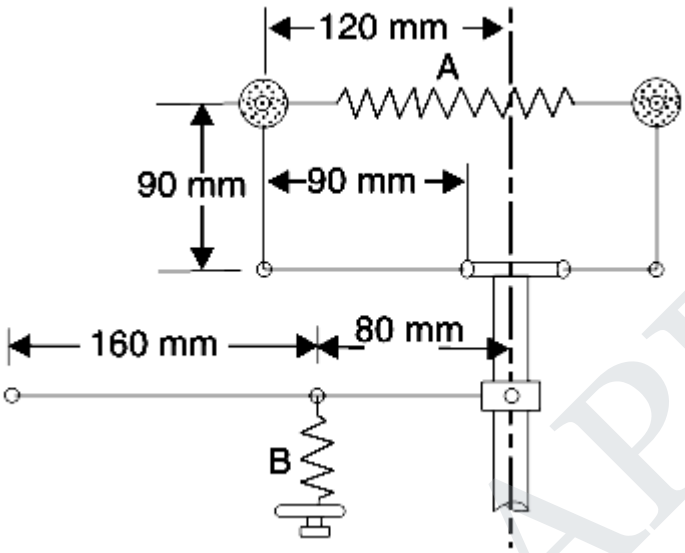

Given Data:

m = 6 kg

r =r_1 = 120 mm = 0.12 m

N =N_1 = 600 rpm

To Find:

Tension in spring B

Stiffness of the spring B

Solution:

Let consider

S_{B1} = Spring force

M.g = Total load at the sleeve

We know that centrifugal force at the minimum speed

$$F_{c1} = m\,(\omega_1)^2\, r_1 = 6\,(62.84)^2\, 0.12 = 2843 \text{ N}$$

Since the tension in each spring A is 1 kN and there are two springs,therefore

Total spring force in spring A,

$$S_{A1} = 2 \times 1 = 2000 \text{ N}$$

Taking moments about the pivot P(neglecting the moment produced by the mass of balls) in order to find the force Mg on the sleeve,in the mean position as shown in Fig

$$F_{C1} \times 90 = S_{A1} \times 90 + \frac{M.g}{2} \times 90 \qquad \text{or} \qquad F_{C1} = S_{A1} + \frac{M.g}{2}$$

$$M.g = 2\,F_{C1} - 2\,S_{A1} = 2 \times 2843 - 2 \times 2000 = 1686 \text{ N}$$

Now taking moments about point Q,

$$S_{B1} \times 160 = M.g.\,(80 + 160) = 1686 \times 240 = 404\,640$$

$$S_{B1} = 404\,640/160 = 2529 \text{ N} \quad \textbf{Ans.}$$

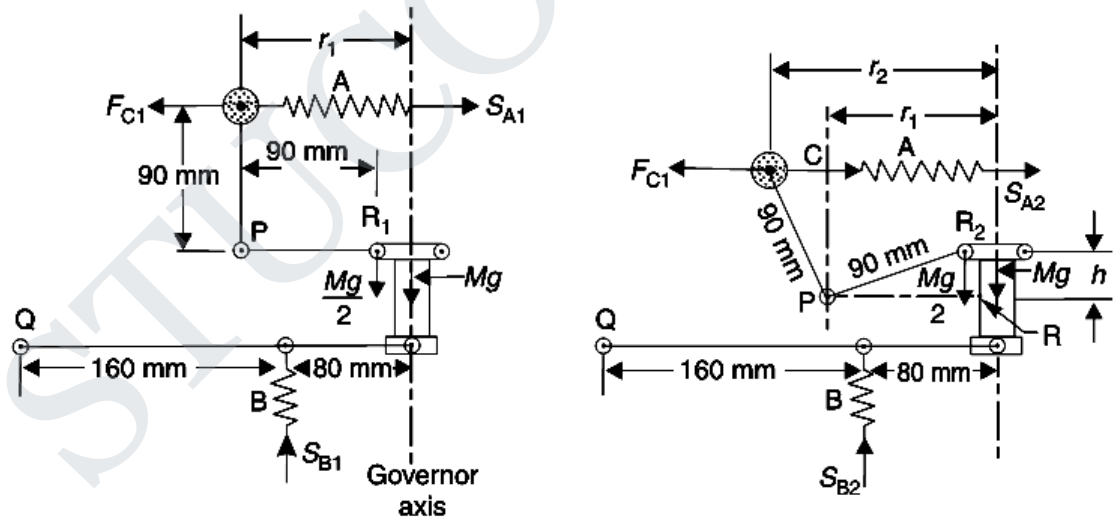

(*a*) Mean position. (*a*) Maximum position.

Stiffness of the spring B

Given : h = 15 mm = 0.015 m; N_2 = 630 r.p.m ; S_A = 10 kN/m

First of all, let us find the maximum radius of rotation (r^2) when the sleeve moves up by 0.015 m. we know that

$$h = (r_2 - r_1)\frac{y}{x} \quad \text{or} \quad r_2 = r_1 + h \times \frac{x}{y} = 0.12 + 0.015 = 0.135 \text{ m}$$

$$\ldots (\because x = y = 90 \text{ mm} = 0.09 \text{ m})$$

Centrifugal force at the maximum speed,

$$F_{C2} = m\,(\omega_2)^2\, r_2 = 6\,(66)^2\, 0.135 = 3528 \text{ N}$$

We know that extension of the spring A,

$= 2\,(r_2 - r_1)$ x No.of springs

$= 2\,(0.135\text{-}0.12)2 = 0.06$ m

Total spring force in spring A,

$S_{A2} = S_{A1}$ + Extension of springs x Stiffness of springs

$= 2000 + 0.06 \text{ x } 10\text{x } 10^3 = 2600\text{N}$

Now taking moments about P, neglecting the obliquity of arms,

$$F_{C2} \times 90 = S_{A2} \times 90 + \frac{M.g}{2} \times 90 \quad \text{or} \quad F_{C2} = S_{A2} + \frac{M.g}{2}$$

$$M.g = 2\,F_{C2} - 2\,S_{A2} = 2 \times 3528 - 2 \times 2600 = 1856 \text{ N}$$

Again taking moments about point Q in order to find the spring force S_{B2} when sleeve rises as shown in figure in maximum

$$S_{B2} \times 160 = M.g\,(80 + 160) = 1856 \times 240 = 445\,440$$

$$S_{B2} = 445\,440\,/160 = 2784 \text{ N}$$

When the sleeve rises 0.015 m , the extension in spring B

$$= 0.015\left(\frac{160}{80 + 160}\right) = 0.01 \text{ m}$$

Stiffness of the spring B ,

$$s_B = \frac{S_{B2} - S_{B1}}{\text{Extension of spring } B} = \frac{2784 - 2529}{0.01} = 25\,500 \text{ N/m}$$

$= 25.5$ N/mm **Ans.**

Industrial/ practical connectivity of the subject:

The dynamic analysis of machines begins with a rigid-body model to determine reactions at the bearings, at which point the elasticity effects are included. The rigid-body dynamics studies the movement of systems of interconnected bodies under the action of external forces. The formulation and solution of rigid body dynamics is an important tool in the computer simulation of mechanical systems.

Dynamic loads and undesired oscillations increase with higher speed of machines. At the same time, industrial safety standards require better vibration reduction. Typical dynamic effects, such as the gyroscopic effect, damping and absorption, shocks, resonances of higher order, nonlinear and self-excited vibrations may be observed in machines like manipulators, flywheels, gears, mechanisms, motors, rotors, hammers, block foundations, presses, high speed spindles, cranes, and belts.

Question Bank

Reg. No | | | | | | | | | | |

Question paper code: 31568

B.E/ B.Tech. DEGREE EXAMINATION, NOVEMBER / DECEMBER 2013.

FIFTH SEMESTER

MECHANICAL ENGINEERING

ME 2302/ ME 52/ ME 1301 / 10122 ME 503 – DYNAMICS OF MACHINERY

(REGULATION 2008/2010)

(COMMON TO PTME 2302 – DYNAMICS OF MACHINERY FOR B.E. (PART TIME) FOURTH SEMESTER MECHANICAL ENGINEERING – REGULATION 2009)

TIME ; THREE HOURS MAXIMUM : 100 HOURS

ANSWER ALL QUESTIONS.

PART – A (10×2 = 20 MARKS)

1. Define shaking force. (Page No: 10 Q.No – 8)
2. Write the conditions for any distributed mass have the same dynamical properties. (Page No: 10 Q.No – 8)
3. Define hammer blow in locomotives. (Page No: 19 Q.No – 8)
4. What are the conditions required for complete balancing of reciprocating parts?
5. Define damping factor and damping coefficient. (Page No: 31 Q.No – 7)
6. What is nodal section in two rotor system?
7. Define step input and harmonic forcing function. (Page No: 42 Q.No – 3)
8. Define transmissibility.
9. Define sensitiveness of a governor. (Page No: 51 Q.No – 1)
10. List some of the terms related to motion of ships using gyroscopic principle.

Part B – (5× 16 = 80 marks)

11. (a) (i) Derive the equation of forces on the reciprocating parts of an engine neglecting the weight of the connecting rod. (12)
(ii) What is turning moment diagram and draw it 's for four stroke IC engine? (4)

Or

(b) A single cylinder, single acting, four stroke gas engine develops 25kw at 320 rpm. The work done by the gases during the expansion stroke is three times the work done on the gases during the compression stroke. The works done during the suction and exhaust stroke being negligible. The fluctuation of speed is not to exceed ±2% of the speed. The turning moment diagram during compression and expansion is assumed to be triangular in shape. Find the weight of the flywheel if its radius of gyration is 0.5m (16)

12.(a) The following data refer to an outside cylinder uncoupled locomotive**(Pg No: 21 Q.No – 2)**

Mass of rotating parts per cylinder = 350kg
Mass of reciprocating parts per cylinder = 300kg
Angle between cranks = 90^0
Crank radius = 0.3m
Cylinder centers = 1.8m
Radius of balance masses = 0.8m
Wheel centers = 1.5m
If whole of the rotating and 2/3rd of the reciprocating parts are to be balanced in planes of the driving wheels, find (i) magnitude and angular positions of balance masses, (ii) speed in km/hr at which the wheel will lift off the rails when the load on each driving wheels is 30 KN and the diameter of tread driving wheels is 1.8m and (iii) swaying couple at speed found in plane. (16)

Or

(b) The axes of the three cylinder air compressor are at 120^0 to one another and their connecting rods are coupled to a single crank. The length of each connecting rods is 240 mm and the stroke is 160 mm. the reciprocating parts have a mass of 2.4 kg per cylinder. Determine the primary and secondary forces if the engine runs at 2000rpm. (16)

(Page No: 26 Q.No – 4)

13. (a) (i) A machine weighs 18kg and is supported on springs and dashpots. The total stiffness of the springs is 12 N/mm and damping is 0.2 N/mm/s the system is initially at rest and a velocity of 120mm/s is imparted to the mass. Determine (i) the displacement and velocity of mass as a function of time (ii) the displacements and velocity after 0.4s (12)
(ii) Describe the types of vibration with simple sketch. (4)

Or

(b) A torsional system is shown in fig. find the frequencies of trosional vibration and thepositions of the nodes also find the amplitudes of vibrations G = 84×10^9 N/m^2 (16)

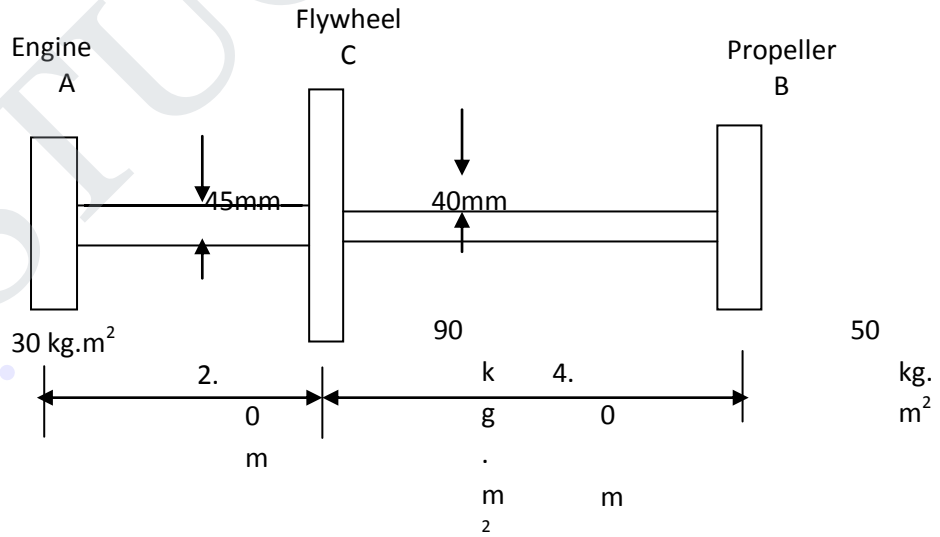

14 (a) (i) Derive the relation for the displacement of mass from the equilibrium position of a damped vibration system with harmonic forcing. (12)

(ii) Define the term vibration isolation. (4)

Or

(b) (i) Discuss the forcing due to support motion. (10)

(ii) What is meant by magnification factor in case of forced vibrations? (6)

15. (a) (i) Explain the function of a proell governor with the help of a neat sketch. Derive the realationship among the various forces acting on the link. (12)

(ii) What are centrifugal governors ? how do they differ from inertia governors ? (4)

Or

(b) (i) The turbine rotor of a ship has mass of 2.2 tonnes and rotates at 1800 rpm clockwise when viewed from the aft. The radius of gyration of the rotor is 320 rpm. Determine gyroscopic couple and its effect when

(1) The ship turns right at a radius of 250 m with a speed of 25 Km/h.

(2) The ship pitches with the bow rising at an angular velocity of 0.8 rad/sec.

(3) The ship rolls at an angular velocity of 0.1 rad/sec. **(Page No: 60 Q.No – 4)** (12)

(ii) What is the effect of gyroscopic couple on the stability of a two wheel vehicle taking a turn? (4)

Reg No: | | | | | | | | | | | |

Question paper code:516410

B.E/ B.Tech DEGREE EXAMINATION, MAY/JUNE 2014.

Fifth Semester

Mechanical Engineering

ME2302/ME52/ME1301/10122 ME503 – DYNAMICS OF MACHINERY

(Regulation 2008/2010)

(Common to PTME2302- Dynamics of machinery for B.E. (Part –Time)

Fourth semester Mechanical Engineering –Regulation 2009)

Time: Three hours Maximum : 100 Marks

Answer ALL questions

PART – A (10*2=20 MARKS)

1. What are the requirements of an equivalent dynamical system?
2. Define the terms coefficient of fluctuation of speed and coefficient of fluctuation of energy.
3. When is a system said to be completely balanced? **(Page No: 18 Q.No – 5)**
4. What is tractive force? **(Page No: 18 Q.No – 6)**
5. Define damping factor or damping ratio. **(Page No: 43 Q.No – 9)**
6. What is meant by logarithmic decrement?
7. Define magnification factor as applied to forced vibrations.
8. List out the sources of excitation in forced vibration. **(Page No: 42 Q.No – 5)**
9. Differentiate between isochronous governors and sensitiveness of governors.
10. What is meant by reactive gyroscopic couple? **(Page No: 53 Q.No – 6)**

PART –B -95*16=80)

11. (a) A horizontal steam engine runni9ng at 120 rpm has a bore of 250 mm and a stroke of 400 mm. the connecting rod is 0.6 m and the mass of the reciprocating parts is 60 kg. when the crank has turned through an angle of 45° from the inner dead centre, the steam pressure on the cover end side is 550 KN/m^2 and that on the crank end side is 70 KN/m^2 considering the diameter of the piston rod equal to 50 mm, determine:
    (i) Turning moment on the crankshaft,
    (ii) Thrust on the bearing, and
    (iii) Acceleration of the flywheel, if the power of the engine is 20KW, mass of the flywheel 60Kg and radius of gyration 0.6m. (16)

Or

(b) A shaft fitted with a flywheel rotates at 250 rpm and drives a machine. The torque of the machine varies in acyclic manner over a period of 3 revolutions. The torque rises from 750Nm to 3000 Nm uniformly during ½ revolutions and remains constant for the following revolution. It then falls uniformly to 750 Nm during next half revolution and remains constant for one revolution, the cycle being repeated thereafter. (16)

12. (a) A,B,C and D are four masses carried by a rotating shaft at radii 100,125'200 and 150 mm respectively. The planes in which the masses revolve are spaced 600 mm apart and the mass of B,C and D are 10Kg,5Kg AND 4Kg respectively.

Find the required mass A and the relative angular settings of the four masses so that the shaft shall be in complete balance. (16)

Or

(b) A four crank engine has the two outer cranks set at 120° to each other, and their reciprocating masses are each 400 Kg. the distance between the planes of rotation of adjacent cranks are 450 mm, 750 mm and 600 mm. if the engine is to be in complete primary baklance,find the reciprocating mass and the relative angular position for each of the inner crank.

If the length of each crank is 300 mm, the length of each connecting rod is 1.2 m and the speed of rotation is 240 rpm, what is the maximum secondary unbalanced force? (16)

13. (a) (i) Explain the term whirling speed or critical speed of a shaft. Prove that the whirling speed for a rotating shaft is the same as the frequency of natural transverse vibration. (8)

(ii) Derive an expression for the natural frequency of free transverse and longitudinal vibration by equilibrium method. (8)

Or

(b) A steel shaft ABCD 1.5 m long has flywheel at its ends A and D. the mass of the flywheel A is 600 Kg and has a radius of gyration of 0.6 m. the mass of flywheel D is 800 Kg and has a radius of gyration of 0.9 m. the connecting shaft has a diameter of 50 mm for the portion AB which is 0.4 m long; and has a diameter of 60 mm for the portion BC which is 0.5 m long; and has a diameter of d mm for the portion CD which is 0.6 m long. Determine:

(i) The diameter d of the portion CD so that the node of the tensional vibration of the system will be at the centre of the length BC; and

(ii) The natural frequency of the torsional vibrations.

(iii) The modulus of rigidity for the shaft material is 80 GN/m^2. (16)

14.(a) A mass of 10 Kg is suspended from one end of a helical spring, the other end being fixed. The stiffness of the spring is 10 N/mm the viscous damping causes the amplitude ton decrease to one tenth of the initial value in four complete oscillations. If a periodic force of 150 Cos 50t N is applied at the mass in the vertical direction, find the amplitude of the forced vibrations. What is its value of resonance? (16)

Or

(b) (i) Establish an expression for the amplitude of forced vibrations. (8)

(ii) What do you understand by vibration isolation and transmissibility? Explain with suitable examples. (8)

15. (a) The radius of rotations of the balls of a hartnell governor is 80 mm at the minimum speed of 300 rpm. Neglecting gravity effect , determine the speed after the sleeve has lifted by 60 mm. also determine the initial compression of the spring, the governor effort and the power, the particular of the governor are given below:

Length of ball arm = 150 mm, length of sleeve arm = 100 mm, mass of each ball = 4Kg, and stiffness of the spring =m 25 N/mm. **(Page No: 54 Q.No – 1)**

(16)

Or

(b) The turbine rotor of the ship has a mass of 3500 Kg. it has a radius of gyration of 0.45 m and a speed of 3000 rpm clockwise when looking from stern. Determine the gyroscopic couple and its effect upon the ship:

(i) When the ship is steering to the left on a curve of 100 m radius at a speed of 36 Km/h.

(ii) When the ship is pitching in a simple harmonic motion, the bow falling with its maximum velocity. The period of pitching is 40 seconds and the total angular displacement between the two extreme positions of pitching is 12 degrees. (16)

REG.NO | | | | | | | | | | |

QUESTION PAPER CODE : 91652

B.E/B.Tech DEGREE EXAMINATIONS , NOVEMBER /DECEMBER 2014

Fifth semester

Mechanical Engineering

ME 2302/ ME 52 – DYNAMICS OF MACHINERY

(Regulation 2008/2010)

Time : Three hours **Maximum** : 100 marks

Answer All Questions

PART -A (10×2=20Marks)

1. What is the purpose of the flywheel used in an engine?
2. Draw the turning moment diagram of a single cylinder double acting steam engine.
3. How the different masses rotating in different planes are balanced?
4. Define Swaying couple. **(Page No: 19 Q.No – 7)**
5. What are the causes and effects of vibrations?
6. Define the term "dynamic magnifier".
7. What do you meant by transmissibility?
8. Define the term "logarithmic decrement" as applied to damped vibrations.
9. What are the effects of the gyroscopic couple on a two wheeled vehicle when taking a turn?
10. Define sensitiveness of governors. **(Page No: 51 Q.No – 1)**

PART -B (5×16 = 80Marks)

11. (a) The equation of the turning moment curve of a three crank engine is (5000 + 1500 sin 3θ) N-m where θ is the crank and in radians. The moment of inertia of the flywheel is 1000 kg – m^2 and the mean speed is 300 rpm. Calculate:
(i) Power of the engine, and (8)
(ii) The maximum fluctuation of the speed of the flywheel in percentage When

(1) The resisting torque is constant, and (4)
(2) The resisting torque is (5000 + 600 sin θ) N-m (4)

Or

(b) A certain machine requires a torque of (5000 + 500 sin θ) N-m to drive it, where θ is the angle of rotation of shaft measured from certain datum. The machine is directly coupled to an engine which produces a torque of (5000 + 600 sin 2θ)N-m. The flywheel and the other rotating parts attached to the engine have a mass of 500 kg at a radius of gyration of 0.4 m. If the mean speed is 150 r.p.m., find:
(i) The fluctuation energy, (6)
(ii) The total percentage fluctuation of speed, and (5)
(iii) The maximum and minimum angular acceleration of the flywheel and the corresponding shaft position. (5)

12. (a) A Shaft carries four masses in parallel planes A, B, C and D in this order along its length. The masses at B and C are 18 kg and 12.5 kg respectively. And each has an eccentricity of 80 mm. The angle between the masses at B and A is190^0,both being measured in the same direction. The axial distance between the planes A and B is 100 mm and that between B and C is 200 mm. If the shaft is in complete dynamic balance, Determine : (i) the magnitude of the masses at A and D; (ii) The distance between the planes A and D; and (iii) The angular position of the mass at D. (16)

Or

(b) A five cylinder in-line engine running at 750 r.p.m has successive cranks 144^0apart, the distance between the cylinder centre lines being 375 mm. the piton stroke is 225 mm and the ratio of the connecting rod to the crank is 4. Examine the engine for balance of primary and secondary forces and couples. Find the maximum values of these and the position of the central crank at which these maximum values occur. The reciprocating mass for each cylinder is 15 kg. (16)

13. (a) A vertical steel shaft 15 mm diameter is held in along bearings 1 m apart and carries at its middle a disc of mass 15 kg. The eccentricity of the centre of gravity of the disc from the centre of the rotor is 0.30 mm. the modulus of elasticity for the shaft material is 200 GN/m^2 and the permissible stress is 70 MN/m^2.Determine

(i) The critical speed of the shaft and (ii) The range of speed over which it is unsafe to run the shaft. Neglect the mass of the shaft. (16)

Or

(b) The vertical shaft of 5 mm diameter is 200 mm long and is supported in long bearings at its ends. The disc of mass 50 kg is attached to the centre of the shaft. Neglecting any increase in stiffness due to the attachment of the disc to the shaft. Find the critical speed of rotation and the maximum bending stress when the shaft is rotating at 75 % of the critical speed. The centre of the disc is 0.25 mm from the geometric axis of the shaft. E = 200 GN/m^2. (16)

(Page No: 32 Q.No – 1)

14.(a) A mass of 10 kg is suspended from one end of a helical spring, the other end being fixed, the stiffness of a spring is 10 N/mm. the viscous damping causes the amplitude to decrease to one-tenth of the initial value in four complete oscillations. If a periodic force of a 150 cos50 N is applied at the mass in the vertical direction, and find the amplitude of the forced vibrations. What is its value of resonance? **(Page No: 45 Q.No – 2)** (16)

Or

(b) A machine part of mass 2 kg vibrates in a viscous medium. Determine the damping coefficient when a harmonic exciting force of 35 N results in resonant amplitude of 12.5 mm with aperiod of 0.2 sec. if the system is excited by a harmonic force of frequency 4 Hz, what will be the percentage increase in the amplitude of vibration when damper is removed as compared with that damping. **(Page No: 47 Q.No – 3)** (16)

15.(a) Explain the effect of the gyroscopic couple on the reaction of the four wheels of a vehicle negotiating a curve. (16)

Or

(b) In an engine governor of the porter type, the upper and lower arms are 200 mm and 250 mm respectively and pivoted on the axis of rotation. The mass of the central load is 15 kg, the mass of each ball is 2 kg and friction of the sleeve together with the resistance of the operating gear is equal to a load of 24 N at the sleeve. If the limiting inclinations of the upper arms to the vertical are 30^0 and 40^0. Find ; taking friction into account, range of speed of the governor.(16)

Reg No : | | | | | | | | | | |

Question Paper Code : 27378

B.E/B.Tech. DEGREE EXAMINATION, NOVEMBER/DECEMBER 2015

Fourth/Fifth Semester

Mechanical Engineering

ME6505 – DYNAMIICS OF MACHINES

(Common to Mechanical Engineering(Sandwich)/B.E Mechatronics Engineering)

(Regulations 2013)

Time: Three Hours **Maximum : 100 Marks**

Answer ALL questions.

PART – A (10 X 2 = 20 Marks)

1. Define D'Alembert's principle for translation and hence define inertia force. **(Page No: 9 Q.No – 4&5)**
2. Define coefficient of fluctuation of energy of a flywheel. **(Page No: 9 Q.No – 2)**
3. Define Static balancing of shaft.
4. State the reason for choosing multi cylinder engine in comparison with that of the single cylinder engine. **(Page No: 18 Q.No – 3)**
5. Write the mathematical expression for a free vibration system with viscous damping.
6. Write the expression for estimation of the natural frequency of free torsional vibration of a shaft.
7. What is the phase difference between the transmitted force and the disturbing force system if $\omega/\omega_n > 1$.
8. Write the equation of motion for the forced damped vibration.
9. What is meant by hunting in a governors. **(Page No: 52 Q.No – 3)**
10. What is the angular speed of precession of the shaft(whose mass moment of inertia is 20 kg-m^2) if it spins about its axis and torque of 100N-m applied about an axis normal to it.

PART – B (5 X 16 = 80 Marks)

11. (a) During a trail on steam engine, it is found that the acceleration of the piston is $36 m/s^2$ when the crank has moved 30° from the inner dead centre position. The net effective steam pressure on the piston is 0.5 M Pa and the frictional resistance is equivalent to a force of 600 N. The diameter of the piston is 300mm and the mass of the reciprocating parts is 180kg. If the length of the crank is 300mm and the ratio of the connecting rod length to the crank length is 4.5.Find (i)reaction on the guide bars (ii) thrust on the crank shaft bearings and (iii) Turning moment on the crank shaft. **(Page No: 11 Q.No – 1)** (16)

OR

(b) A single cylinder double acting engine develops 150 KW at a mean speed of 80 rpm. The coefficient of fluctuation of energy is 0.1 and the fluctuation of speed is ±2% of mean speed. If the mean diameter of the flywheel rim is 2m and the hub and spokes provide 5% of the rotational inertia of the flywheel, find the mass and cross -sectional area of the flywheel rim. Assume the density of the flywheel material(which is cast iron)as 7200 kg/m^3. **(16)**

12. (a) A,B,C and D are four masses carried by a rotating shaft at radii 100,125,200 and 150mm respectively. The planes in which the masses revolve are spaced 600mm apart and the mass of B,C and D are 10 kg, 5kg and 4 kg respectively. Find the required mass A and the relative angular setting of the four masses so that the shaft shall be in complete balance. **(Page No: 19 Q.No – 1)** (16)

OR

(b) A 90° V engine has two cylinders which are placed symmetrically. The two connecting rods operate a common crank. The length of connecting rod are 320mm each and crank radius is 80mm.The reciprocating mass per cylinder is 12kg. If the engine speed is 600rpm,then find the resultant primary and secondary forces. Also find the maximum resultant secondary forces. (16)

13. (a) Determine (i) the critical damping coefficient, (ii) the damping factor, (iii) the natural frequency of damped vibrations, (iv) the logarithmic decrement and (v) the ratio of two consecutive amplitudes of a vibrating systems which consists of mass of 25kg, a spring of stiffness 15KN/m and a damper. The damping provided is only 15% of the critical value. (16)

Or

(b) A shaft of length 1.25m is 75mm in diameter for the first 275mm of its length, 125mm in diameter for the next 500mm length, 87.5 mm in diameter for the

next 375 mm length and 175mm in diameter for the remaining 100mm of its length. The shaft carries two rotors at two ends. The mass moment of inertia of the first rotor is 75 kg/m^2 where as of the second rotor is 50 kg/m^2. Find the frequency of natural torsional vibrations of the system. The modulus of rigidity of the shaft material may be taken as 80GPa. **(Page No: 39 Q.No – 5)** (16)

14. (a) A single cylinder vertical petrol engine has a mass of 200kg and is mounted upon a steel chassis frame. The vertical static deflection of the frame is 2.4mm due to the weight of the engine. The reciprocating parts of the engine has a mass of 9kg and move through avertical stroke of 160mm with simple harmonic motion. A dshpot with a damping coefficient of 1N/mm/s is also used to dampen the vibrations, considering that the steady state of vibration is reached, Determine:

(i) Amplitude of the forced vibration if the driving shaft rotates at 500rpm and

(ii) The speed of the driving shaft at which resonance will occur. (16)

(Page No: 44 Q.No – 1)

OR

(b) A machine has a total mass of 90kg and unbalanced reciprocating parts of mass 2kg which moves through a vertical stroke of 100mm with simple harmonic motion. The machine is mounted on four springs. The machine is having only one degree of freedom and can undergo vertical displacement only.

Calculate(i) the combined stiffness of the springs if the force transmitted to the foundation is one thirteenth of the applied force. Neglect damping and take the speed of rotation of the machine crank shaft as 1000rpm.

When the machine is actually supported on the springs, it is found that the damping reduces the amplitude of the successive free vibrations by 30%. Find (ii) the force transmitted to the foundation at 900 rpm. **(16)**

(Page No: 48 Q.No – 4)

15. (a)Calculate the minimum speed,maximum speed and range of the speed of a porter governor, Which has equal arms 200mm long and pivoted on the axis of rotation. The mass of each ball is 4kg and the central mass on the sleeve is 20 kg. The radius of rotation of the ball is 100mm when the governor begins to lift and 130mm when the governor is at maximum speed. (16)

OR

(b) The turbine rotor of a ship has a 3500 kg and rotates at 3000 rpm when viewed from stern. The radius of gyration of the rotor is 450mm.Determine gyroscopic couple and its effect when

(i)The ship turns left at a radius of 100m with a speed of 36kmph.

(ii)When the ship is pitching in a simple harmonic motion the bow falling with its maximum velocity. The speed of pitching is 40 seconds and the total angular displacement between the two extreme positions of pitching is 12°.

(Page No: 60 Q.No – 4) (16)

Reg.No. | | | | | | | | | | |

Question Paper Code : 51640

B.E/B.Tech. DEGREE EXAMINATION, MAY/JUNE 2014

Fourth Semester

Mechanical Engineering

ME2302/ME 52 – DYNAMIICS OF MACHINERY

(Common to PTME 2302 – Dynamics of machinery for B.E (Part time) Fourth Semester Mechanical Engineering - Regulation 2009)

(Regulation 2008/2010)

Time : Three Hours **Maximum : 100 Marks**

Answer ALL questions.

PART – A (10 X 2 = 20 Marks)

1. What are the requirements of an equivalent dynamical system?
2. Define the terms `coefficient of fluctuation of speed` and coefficient of fluctuation of energy.
3. When is a system said to be a completely balanced? **(Page No: 18 Q.No – 5)**
4. What is tractive force? **(Page No: 18 Q.No – 6)**
5. Define damping factor or damping ratio. **(Page No: 43 Q.No – 9)**
6. What is meant by logarithmic decrement?
7. Define magnification factor as applied to forced vibrations.
8. List out the sources of excitation in forced vibration. **(Page No: 42 Q.No – 5)**
9. Differentiate between isochronous governors and sensitiveness of governors.
10. What is meant by reactive gyroscopic couple? **(Page No: 53 Q.No – 6)**

51640

PART – B (5 X 16 = 80 Marks)

11. (a)A horizontal steam engine running at 120 rpm has a bore of 250mm and a stroke of 400 mm. The connecting rod is 0.6m and mass of the reciprocating parts is 60kg. When the crank has turned through an angle of 45° from the inner dead centre, the steam pressure on the cover end side is $550KN/m^2$ and that on the crank side is $70KN/m^2$ considering the diameter of the piston rod equal to 50mm. Determine:

(i) Turning moment on the crank shaft

(ii) Thrust on the bearing

(iii) Acceleration of the flywheel, if the power of the engine is 20 KW.

Mass of the flywheel; 60 kg and radius of gyration 0.6m **(16)**

OR

(b) A shaft fitted with a flywheel rotates at 250 rpm and drives a machine. The torque of machine varies in a cyclic manner over a period of 3 revolutions. The Torque rises from 750 Nm to 3000 Nm uniformly during ½ revolution and remain constant for the following revolution. It then falls uniformly to 750 Nm during next ½ revolution and remain constant for one revolution, the cycle being repeated thereafter.

Determine the power required to drive the machine and percentage fluctuation in speed,if the driving torque applied to the shaft is constant and the mass of the flywheel is 500kg with radius of gyration of 600mm. **(16)**

12. (a) A, B, C and D are four masses are carried by a rotating shaft at radii 100,125,200and 150 mm respectively. The planes in which the masses revolve are spaced 600mm apart and the mass of B, C and D are 10kg, 5kg and 4 kg respectively

Find the required mass A and the relative angular settings of the four masses so that the shaft shall be in complete balance. **(16)**

Or

(b) A four crank engine has the two outer cranks set at $120^o$to each other, and their reciprocating masses are each 400kg. The distance between the planes of rotation of adjacent cranks are 450 mm, 750 mm and 600 mm. If the engine is to be in complete primary balance, find the reciprocating mass and the relative angular position for each of the inner crank.

If the length of each crank is 300 mm, the length of each connecting rod is 1.2 m and the speed of rotation is 240 rpm, What is the maximum secondary unbalanced force? **(16)**

13. (a) (i) Explain the term `whirling speed` or `critical speed` of a shaft. Prove that the Whirling speed for a rotating shaft is the same as the frequency of natural transverse vibrations.

(ii) Derive an expression for the natural frequency of free transverse and longitudinal vibration by equilibrium method. **(16)**

OR

(b) A steel shaft ABCD 1.5m long has flywheel at its end A and D. The mass of The flywheel A is 600 kg and has a radius of gyration of 0.6 m. The mass of the flywheel D is 800 kg and has a radius of gyration of 0.9m. the connecting shaft has a diameter of 50mm for the portion AB which is 0.4m long and has a diameter of 60 mm for the portion BC which is 0.5 m long and has a diameter of d mm for the portion CD which is 0.6 m long. Determine:

(i) The diameter d of the portion CD so that the node of the torsional vibration of the system will be at the centre of the length BC; and

(ii) The natural frequency of the torsional vibrations.

(iii) The modulus of rigidity for the shaft material is 80GN/m^2. **(16)**

14. (a) A mass of 10 kg is suspended from one end of a helical spring, the other end being fixed. The stiffness of the spring is 10 N/mm the viscous damping causes the amplitude to decrease to one tenth of the initial value in four complete oscillations. If a periodic force of 1150 Cos 50t N is applied at the mass in the vertical direction, find the amplitude of the forced vibrations. What is its value of resonance? **(16)**

OR

(b) (i) Establish an expression for the amplitude of forced vibrations. (8)

(ii)What do you understand by vibration isolation and transmissibility? Explain with suitable examples. **(8)**

15. (a)The radius of rotation of the balls of a Hartnell governor is 80 mm at the minimum speed of 300 rpm. Neglecting gravity effect, determine the speed after the sleeve has lifted by 60 mm. Also determine the initial compression of the spring, the governor effort and the power. The particular of the governor are given below:
Length of the ball arm = 150mm, Length of sleeve arm = 100mm, mass of each ball = 4 kg, and stiffness of the spring = 25 N/mm. **(Page No: 54 Q.No – 1)** (16)

OR

(b) The turbine rotor of a ship has a 3500 kg and rotates at 3000 rpm when viewed from stern. The radius of gyration of the rotor is 450mm.Determine gyroscopic couple and its effect when

(i) The ship turns left at a radius of 100m with a speed of 36kmph.

(ii) When the ship is pitching in a simple harmonic motion the bow falling with its maximum velocity. The speed of pitching is 40 seconds and the total angular displacement between the two extreme positions of pitching is 12° (16)

51640

Reg.No. | | | | | | | | | | |

Question Paper Code : 57572

B.E/B.Tech. DEGREE EXAMINATION, MAY/JUNE 2016

Fourth Semester

Mechatronics Engineering

ME6505 – DYNAMIICS OF MACHINES

(Common to Fourth Semester Mechanical Engineering)

(Regulations 2013)

Time : Three Hours **Maximum : 100 Marks**

Answer ALL questions.

PART – A (10 X 2 = 20 Marks)

1. Distinguish between crank effort and piston effort.
2. Define D'Alembert's principle. **(Page No: 09 Q.No – 5)**
3. Differentiate: Static and Dynamic balancing. **(Page No: 18 Q.No – 1)**
4. What is meant by balancing of rotating masses? **(Page No: 18 Q.No – 2)**
5. Define the term logarithmic decrement. **(Page No: 31 Q.No – 8)**
6. What are the different types of vibratory motions? **(Page No: 30 Q.No – 1)**
7. Define magnification factor. **(Page No: 42 Q.No – 4)**
8. What is the effect of inertia on the shaft in longitudinal and transverse vibrations?
9. Write short note on "hunting of governors".
10. The engine of an aeroplane rotates in clockwise direction when seen from the tail end and the aeroplane takes a turn to the left. What will be the effect of gyroscopic couple on the aeroplane? **(Page No: 53 Q.No – 9)**

52572

PART – B (5 X 16 = 80 Marks)

11. (a) The ratio of the connecting rod length to crank for a vertical petrol engine is 4 : 1. The bore/stroke is 80/100 mm and mass of the reciprocating part is 1kg. The gas pressure on the piston is 0.5 N/mm^2 when it has moved 10 mm from the TDC on its power stroke. Determine the net head on the gudgeon pin. The engine runs at 1800 rpm. What engine speed will this load be zero? **(Page No: 12 Q.No – 2)** **(16)**

OR

(b) (i) Derive the equation of forces on the reciprocating parts of an engine, neglecting the weight of the connecting rod. **(10)**

(ii) What is turning moment diagram and draw it for 4 stroke IC engine. **(6)**

12. (a) Three masses are attached to a shaft as follows: 10 kg at 90 mm radius; 15 kg at 120 mm radius and 9 kg at 150 mm radius. The masses are to be arranged so that shaft is in static balance. Determine the angular position of masses relative to 10 kg mass. All the masses are in the same plane. **(16)**

OR

(b) (i) What is meant by swaying couple? Deduce the expression for its magnitude and explain its influence. **(10)**

(ii) State the methods of force balancing of linkages by Lowen and Berk of method. **(6)**

13. (a)Derive the expression for the natural frequency of free transverse or longitudinal vibrations by (i) Equilibrium method, (ii) Energy method. **(Page No: 33 Q.No – 2)** **(16)**

OR

52572

(b) Find the equation of motion for the spring-mass-dashpot system shown in fig. For cases, when (i) $\xi = 2$. (ii) $\xi = 1$, and (iii) $\xi = 0.3$. The mass 'm' is displaced by a distance of 30 mm and released. **(16)**

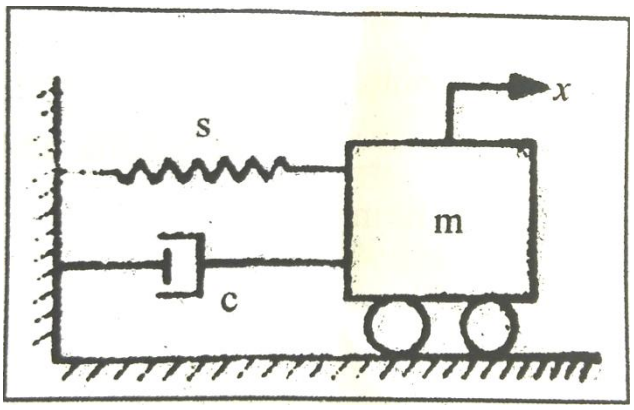

14. (a) A single vertical petrol engine of total mass of 200 kg is mounted upon a steel chassis frame. The vertical static deflection of the frame is 2.4 mm due to the weight of the engine. The mass of the reciprocating parts is 9kg and the stroke of the piston is 160 mm with S.H.M. If dashpot of damping coefficient of 1N/mm/s is used to dampen the vibrations, calculate at steady state: **(16)**

(i) The amplitude of forced vibrations at 500 rpm engine speed and

(ii) The speed of the driving shaft at which resonance will occur.

(Page No: 44 Q.No – 1)

OR

(b) (i) Derive the equation of vibration isolation factor or transmissibility ratio. **(Page No: 50 Q.No – 5)** **(10)**

(ii) Write short notes on (1) frequency response curve and (2) phase frequency response curve. **(6)**

15. (a) (i) Discuss the effect of the gyroscopic couple on a two wheeled vehicle while taking a turn. **(6)**

(ii) A turbine of a ship has a mass of 20 tonnes and a radius of gyration of 0.75m. Its speed is 2000 rpm. The ship pitches 6 ° above and below the horizontal position. One complete oscillation takes 20 seconds and the motion is simple harmonic. Calculate the maximum couple tending to shear the holding down bolts of the turbine and the maximum angular acceleration of the ship during pitching. **(10)**

OR

(b) A porter governor has all four arms 300 mm long. The upper arms are pivoted on the axis of rotation and lower arms are attached to the sleeve at distance of 3.5 mm from the axis. The mass of each ball is 7 kg and mass on the sleeve is 54kg. If extreme radii of rotation of the balls are 200 mm and 250 mm. Determine the range of speed of governor. **(Page No: 56 Q.No – 2)** **(16)**

57572

Reg. No. | | | | | | | | | | |

Question Paper Code: 71855

B.E./B.Tech. DEGREE EXAMINATION, APRIL/MAY 2015

Fifth Semester

Mechanical Engineering

ME 2302/ME52/ME1301/10122 ME 503 – DYNAMICS OF MACHINERY

(Regulations 2008/2010)

(Common to PTME 2302/10122 ME 503- Dynamics of Machinery for B.E. (Part-Time) Fourth semester Mechanical Engineering- Regulations 2009/2010)

Time – Three hours Maximum: 100 Marks

Answer all questions

Part – A (10 X 2 = 20 marks)

1. State the principle of virtual work.
2. Define inertia and inertia force.
3. List out two conditions required for complete external balancing of a rotating system.
4. What is known as hammer blow in reciprocating engines? **(Page No: 19 Q.No – 8)**
5. Write the vibration characteristics.
6. Differentiate coulomb damping and viscous damping.
7. Define vibration isolation.
8. What is fundamental frequency?
9. Enlist the difference between a governor and a flywheel. **(Page No: 52 Q.No – 4)**
10. Depict the effect of gyroscopic couple in ships during pitching. **(Page No: 53 Q.No – 8)**

PART – B (5 X 16 = 80 marks)

11. a) Refer Fig.11 (a). Determine the couple on a crank 2 to be applied for equilibrium of the system, when a force of 500 N acts on the connecting rod at point C as shown. Also determine the resultant of forces exerted on the frame of the engine. (16)

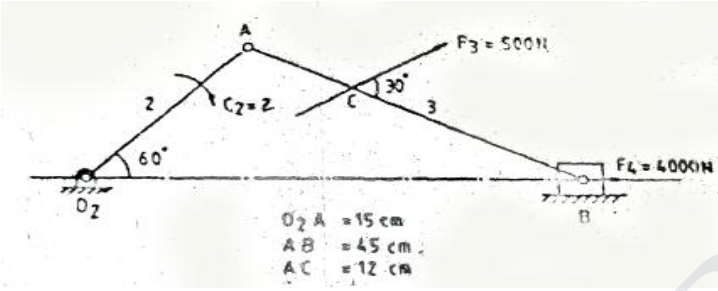

Fig.11(a)

Or

b) The lengths of crank and connecting rod of a horizontal reciprocating engine are 100 mm and 500 mm respectively. The crank is rotating at 400 rpm. When the crank has turned 30˚ from the inner dead centre, find analytically i) acceleration of the piston, ii) velocity of the piston, iii) angular velocity of the connecting rod and iv) angular acceleration of the connecting rod.

12. a) The following data are related to a two cylinder locomotive with cranks at 90˚:

i) Mass of the reciprocating parts/cylinder = 300 kg,

ii) Crank radius = 300 mm,

iii) Diameter of driving wheel = 1800 mm,

iv) Distance between cylinder axis = 600 mm

v) Distance between the driving wheel = 1600 mm

Determine:

1) The fraction of the reciprocating masses to be balanced if the hammer blow is not to exceed 45 kN at 95 kmph,

2) The variation in tractive effort.

3) The maximum swaying couple.

Or

b) A shaft carries four masses A,B,C and D of magnitude 200 kg, 300 kg, 400 kg and 200 kg respectively and revolving at radii 80 mm, 70 mm, 60 mm and 80 mm in planes

measured from A at 300 mm, 400 mm and 700 mm. The angles between the cranks measured anticlockwise are A to B 45˚, B to C 70˚ and C to D 120˚. The balancing masses are to be placed in planes X and Y. the distance between the planes A and X is 100 mm between X and Y is 400 mm between Y and D is 200 mm. if the balancing masses revolve at a radius of 100 mm. find their magnitudes and angular positions.

13. a) A spring loaded governor of the Hartnell type has equal arms. The balls rotate in a circle of 15 cm dia when the sleeve is in the mid position and the ball arms are vertical. The equilibrium speed for this position is 500 rpm. The maximum sleeve movement is to be 3 cm and the maximum variation of speed taking in account the friction to be ±5% of the mid position speed. The mass of the sleeve is 5 kg and frictio force may be consideration to arise out of an equivalent 3 kg mass at the sleeve. The power of the governor must be sufficient to overcome the friction by 1% change of speed either way from mid position.

Determine :

i) The rotating mass,
ii) The spring stiffness,
iii) The initial compression of spring.

Neglect the obliquity effect of arms.

Or

b) The driving axle of a locomotive with two wheels has a mass moment of inertia of 350 kg m^2. The wheels are 1.8 mm diameter. The distance between the planes of the wheels is 1.5 m. when travelling at 100 km/hr the locomotive passes over a defective rail which causes the right hand wheel to fall 10 mm and rise again in a total time of 0.1 sec, the vertical movement of the wheel being with SHM. Find the maximum gyroscopic torque caused. Determine the direction in which it acts when the wheel is failing. Let the linear motion of the right hand wheel is $\alpha \cos qt$, where $\alpha = 0.005$m and $q = (2\pi/0.1)$ rad/sec

(Page No: 61 Q.No – 5)

14. a) A flywheel having a mass of 35 kg was allowed to swing as pendulum about a knife-edge at the inner side of the rim, as shown in Fig.14(a). If the measured time period of oscillation was 1.25 second, determine the moment of inertia of the flywheel about its geometric axis.

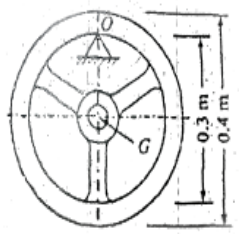

Fig.14(a). Flywheel as Pendullum

Or

b) The disc of a torsional pendulum has a moment of inertia of 0.068kg-m^2 and it immersed in a viscous fluid. The brass shaft (G = 40 GN/m^2) attached to it is of 10 mm diameter and 380 mm length, when the pendulum is vibrating the amplitudes on the same side of the rest position for successive cycles are 5˚,3˚ and 1.8˚. determine i) the logarithmic decrement, ii) the damping torque at unit velocity, iii) the periodic time of vibration. What would be the frequency of vibrations if the disc were removed from the viscous fluid?

15. a) The diagram shows a mass-spring-dashpot system. The support is moved with a motion of y = 6 sin (40 t) mm. determine the amplitude of the mass and the phase angle.

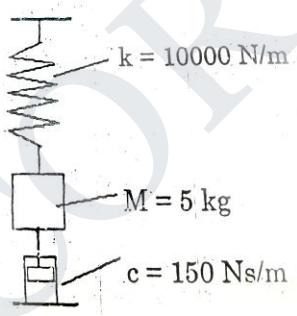

Or

b) The time of free vibration of a mass hung from the end of a helical spring is 0.8s. when the mass is stationary, the upper end is made to move upwards with displacement Y mm given by Y = 16 sin 2πt, where t is time in seconds measured from the beginning of the motion. Neglecting the mass of spring and damping effect, determine the vertical distance through which the mass is moved in the first 0.3seconds.

. Reg. No | | | | | | | | | | |

Question Paper Code: 21855

B.E./B.Tech. DEGREE EXAMINATION, NOVEMBER/DECEMBER 2015

Fifth Semester

Mechanical Engineering

ME 2302/ME52/ME1301/10122 ME 503 – DYNAMICS OF MACHINERY

(Regulations 2008/2010)

(Common to PTME 2302/10122 ME 503- Dynamics of Machinery for B.E. (Part-Time) Fourth semester Mechanical Engineering- Regulations 2009/2010)

Time – Three hours Maximum: 100 Marks

Answer all questions

Part – A (10 X 2 = 20 marks)

1. The length of crank and connecting rod of vertical reciprocating engine are 200 mm and 1.5 m respectively. If the crank rotates at 200 rpm. Find the velocity of piston at θ = 40˚. **(Page No: 10 Q.No – 10)**

2. Why the weight of flywheel for single cylinder engine is heavier than that of some powered multi cylinder engine?

3. What do you mean by partial balancing of single cylinder engine? **(Page No: 18 Q.No – 4)**

4. In case of balancing of rotary masses in different planes, how many planes in which balance masses will be kept?

5. Why transient sloution is not conisered in the response of forced damped vibrating system?

6. If a damper exerts a force of 30 kN at a speed of 2m/s movement, determine the damping coefficient.

7. Define transmissibility.

8. Classify vibration. **(Page No: 43 Q.No – 7)**

9. Why too sensitivity governors are not useful?

10. What is the function of active gyrocouple?

PART – B (5 X 16 = 80 marks)

11. a) A vertical petrol engine 150 mm diameter and 200 mm stroke has a connecting rod 350 mm long. The mass of the piston is 1.6 kg and engine speed is 1800 rpm. On the expansion stroke with crank angle 30˚ from top dead centre, the gas pressure is 750 kN/m^2. Determine the net thrust on the piston.

Or

b) The turning moment diagram for multi cylinder engine has been drawn to a vertical scale of 1 mm = 650 Nm and a horizontal scale of 1 mm = 4.5˚. the area above and below the mean torque line are -28, +380, -260, +310, - 300, + 242, -380, +265 and -229 mm^2, the fluctation of speed is limited to ± 1.8% of the mean speed which is 400 rpm. Density of rim material is 700 kg/m^3 and width of the rim is 4.5 times its thickness. The hoop stress in the rim material is limited to 6 N/mm^2. Neglecting the effect of the boss and arms, determine diameter and cross section of flywheel rim. **(Page No: 13 Q.No – 3)**

12. a) Data of three unbalance masses A,B and C are given below M_a = 4 kg, M_b = 3 kg M_c = 2.5 kg, R_a = 75 mm, R_b = 85 mm, R_c = 50 mm, θ_a = 45˚, θ_b = 135˚, θ_c = 240˚(θ measured from right horizontal axis at the origin) the shaft length is 800 mm between bearings. These three masses are completely balanced by two counter masses located 75 mm from each bearings. The axial distances of the threee unbalanced masses are L_a = 150 mm, L_b = 350 mm, L_c = 525 mm from the right hand side of the contour mass plane. Determine the masses and angular position s of the countour masses, if the radial location of the contour masses are R_{b1} = 75 mm and R_{b2} = 40 mm.

Or

b) The following data are related to a single cylinder reciprocating engine:

Mass of the reciprocating parts = 40 kg,

Mass of revolving parts = 30 kg at 180 mm radius,

Speed = 150 rpm, stroke = 350 mm.

If 60% of the reciprocating parts and all the revolving parts are to be balanced. Determine:

i) The balance mass required at radius of 320 mm,

ii) The unbalanced force when the crank has turned 45˚ from the top dead centre.

13. a) A rotor has mass of 12 kg and is mounted midway on a 24 mm diameter horizontal shaft supported at the ends by two bearings. The bearings are 1 m apart. The shft rotates at 2400 rom. If the centre of mass of the rotor is 0.11 mm above from the geometric centre of the rotor due to a certain manufacturing defects, find the amplitude of the study state vibration and the dynamic force transmitted to the bearing. Take E = 200 GN/m^2.

Or

b) The shaft carries two masses. The mass A is 300 kg with radius of gyration of 0.75 m and the mass B is 500 kg with radius of gyration of 0.9 m the shaft is a stepped shaft having 100 mm diameter for 300 mm length, 150 mm diameter for 160 mm length, 120 mm diameter for 125 mm length and 90 mm diameter for 400 mm length. Determine the frequency of the natural torsional vibration. It is desired to have node at the mid section of shaft of 120 mm diameter by changing the diameter of the section having 90 mm diameter, what will be the new diameter. Take C = 84 GN/m^2.

14. a) A machine with a mass of 500 kg has an amplitude of vibration 0.01m when operating at a speed of 49 Hz. If the machine is critically damped and spring stiffness coefficient is 10×10^3 N/m. Find the amount of unbalance.

Or

b) The static deflection of an electric motor of mass 400 kg supported by a system of four parallel springs and the static deflection is found to be 50 mm. if the electric motor has rotating unbalance of 20 kgm. Determine

i) The amplitude of vibration at 2000 rpm

ii) The force transmitted to the ground.

15. a) In a spring loaded governor, the controlling force curve is a straight line. The balls are 400 mm apart, when the controlling force is 1500 N and 240 mm when it is 800 N. the mass of each ball is 10 kg. Determine the speed at which the governor runs, when the balls are 300 mm apart. By how much should the initial tension be increased to make the governor isochronous? Also find the isochronous speed.

Or

b) The turbine rotor of a ship has mass of 2.2 tones and rotates at 1800 rom clockwise when viewed from the aft. The radius of gyration of rotor is 320 mm. determine the gyroscopic couple and its effect when

i) The ship turns right at a radius of 250 m with a speed of 25 km/hr,

ii) The ship pitches with the bow rising at an angular velocity of 0.8 rad/s,

iii) The ship rolls at an angular velocity of 0.1 rad/sec.

Reg.No. | | | | | | | | | | |

Question Paper Code : 11528

B.E/B.Tech. DEGREE EXAMINATION, NOVEMBER/DECEMBER 2012

Fifth Semester

Mechatronics Engineering

ME 2302/ME 52/ME 1301 – DYNAMIICS OF MACHINERY

(Common to PTME 230 – Dynamics of Machinery for B.E (Part-Time)Fourth Semester Mechanical Engineering)

(Regulations 2008)

Time : Three Hours **Maximum : 100 Marks**

Answer ALL questions.

PART – A (10 X 2 = 20 Marks)

1. Distinguish "piston effort" and "crank effort". **(Page No: 09 Q.No – 1)**
2. What is the function of a flywheel? How does it differ from that of a governor? **(Page No: 10 Q.No – 6)**
3. Differentiate: Static and Dynamic balancing. **(Page No: 18 Q.No – 9)**
4. Define hammer blow.
5. What is difference between damping and viscous damping? **(Page No: 30 Q.No – 4)**
6. What is meant by whirling speed of the shaft? **(Page No: 30,43 Q.No – 5,8)**
7. Define isolation factor. **(Page No: 42 Q.No – 2)**
8. Write down the expression for amplitude of forced vibration.
9. Define "hunting of a governors". **(Page No: 52 Q.No – 3)**
10. What is the effect of gyroscopic on an automobile taking a turn? **(Page No: 53 Q.No – 8)**

PART – B (5 X 16 = 80 Marks)

11. (a) Deduce an expression for the inertia force in the reciprocating parts, neglecting the weight of the connecting rod. **(16)**

OR

(b) (i) The turning moment curve for an engine is representd by the equation, T=(20,000 + 9500 sin 2θ – 5700 cos 2θ) N-m, where θ is the angle moved by the crank from inner dead centre. If the resisting torque is constant, find

(i) power developed by the engine,

(ii) Moment of inertia of flywheel in kg-m^2,if the total fluctuation of speed is not the exceed 1% of mean speed which is 180 rpm,and

(iii) Angular acceleration of the flywheel when the crank has turned through 45^0 from inner dead centre. **(Page No: 16 Q.No – 5)** (16)

12. (a) A,B,C and D are four masses carried by a rotating shaft at radii 100, 125, 200 and 150 mm respectively. The planes in which the masses revolve are spaced 600 mm apart and the mass B,C and D are 10 kg, 5 kg and 4kg respectively.

Find the required mass A and the relative angular setting of the four masses so that the shaft shall be in complete balance. (16)

OR

(b) A four crank engine has the two outer cranks set at 120^0 to each other, and their reciprocating masses are each 400 kg. The distance between the planes of rotation of adjacent cranks are 450 mm, 750 mm and 600 mm. If the engine is to be in complete primary balance, find the reciprocating mass and relative angular position for each of the inner cranks. If the length of each crank is 300 mm, the length of each connecting rod is 1.2 m and the speed of rotation is 240 rpm. What is the maximum secondary unbalanced force? **(Page No: 23 Q.No – 3)** (16)

13. (a) The mass of a single degree damped vibrating system is 7.5 kg and makes 24 free oscillations in 14 seconds when disturbed from its equilibrium position. The amplitude of vibration reduces to 0.25 of its initial value after five oscillations. Determine (i) Stiffness of the spring,

(ii) Logarithmic decrement and

(iii) Damping factor. **(Page No: 38 Q.No – 4)** (16)

OR

(b) (i) Derive an expression for the frequency of free torsional vibrations for a shaft fixed at one end and carrying a load on the free end. (8)

(ii) What is meant by torsionally equivqlent length of a shaft as referred to a stepped shaft? Derive the expression for the equivqlent length of a shaft which has several steps. (8)

14. (a) A vibratory body of mass 150 kg supported on springs of total stiffness 1050 kN/m has a rotating unbalance force of 525 N at a speed of 6000 rpm. If the damping factor is 0.3,determine

i. The amplitude caused by the unbalance and its phase angle
ii. The transmissibility, and
iii. The actual force transmitted and its phase angle. (16)

OR

(b) What do you understand by transmissibility? Describe the method of finding the transmissibility ratio from unbalanced machine supported with foundation. (16)

15. (a) The radius of rotation of the balls of a Hartnell governor is 80 mm at the minimum speed after the sleeve has lifted by 60 mm. also determine the initial compression of the spring, the governor effort and the power. The particulars of the governor are given below: Length of the ball arm = 150 mm, length of sleeve arm = 100 mm, mass of each ball = 4kg, and stiffness of the spring = 25 N/mm. (16)

OR

(b) A ship is propelled by a turbine rotor which has a mass of 5 tonnes and a speed of 2100 rpm. The rotor has a radius of gyration of 0.5 m and rotates in a clockwise direction when viewed from the stern. Find the gyroscopic effect in the following conditions: (i) The ship sails at a speed of 30 km/hr and steers to the left in a curve having 60m radius. (ii) The ship pitches 6^0 above and 6^0 below the horizontal position. The bow is descending with its maximum velocity. The motion due to pitching is simple harmonic and the periodic time is 0 seconds. (iii) The ship rolls and at a certain instant it has an angular velocity of 0.03 rad/s clockwise when viewed from stern.

Determine also the maximum angular acceleration during pitching. Explain how the direction of motion due to gyroscopic effect is determined in each case. (16)

Reg .No: | | | | | | | | | | |

Question Paper code: 80665

B.E/B.TECH .DEGREE EXAMINATION, NOVEMBER/DECEMBER 2016

Fifth semester

Mechanical Engineering

ME 6505 – DYNAMICS OF MACHINES

(Common to Fourth Semester Mechanical Engineering (Sandwhich and Mechatronics Engineering)

(Regulation 2013)

Time: Three hours Maximum: 100 marks

Answer ALL questions

PART A – (10 X 2 =20 Marks)

1. Define inertia and inertia force.
2. What is the purpose of flywheel in an engine?
3. A flywheel has an unbalanced mass of 0.15 kg at a radius of 0.4 m from the axis of rotation. Calculate the unbalanced force if the shaft rotates at 200 rpm.
4. What is hammer blow in locomotives?
5. What are the different types of damped vibration?
6. Define logarithmic decrement.
7. Define Vibration Isolation.
8. Write down the equation for forced vibrations.
9. Define sensitivity of governors.
10. Find the angular precession of a disc spinning on its axis at 220 rad/s, when a torque 100 N-m is applied about an axis normal to it. Mass moment of inertia of the disc is the 1 kg-m^2.

PART B – (5 X 16 = 80 Marks)

11. (a) The Crank and the connecting rod of a vertical single cylinder gas engine running at 1800 rpm are 60 mm and 240 mm respectively. The diameter of the piston is 80 mm and the mass of the reciprocating parts is 1.2 kg. At a point during the power stroke when the piston has moved 20 mm from the top dead centre, the pressure on the piston is 800 kN/m^2. Determine the

(i) Net force on the piston

(ii) Thrust in the connecting rod

(iii) Thrust on the sides of the cylinder walls

(iv) The engine speed at which the above values are zero.

Or

(b) The turning moment diagram for a multi cylinder engine has been drawn to scale 1 mm = 600 N-m vertically and 1 mm = 3^0 horizontally. The intercepted areas between the output torque curve and the mean resistance line, taken in order from one end, are as follows:

+52, -124,+92, -140, +85, -72 and +107 mm^2, when the engine is running at a speed of 600 r.p.m. If the total fluctuation of speed is not to exceed ± 1.5 % of the mean, find the necessary mass of the flywheel of radius 0.5 m.

12. (a) (i) Difference between static and dynamic balancing. (4)

(ii) A circular disc mounted on a shaft carries three attached masses 4 kg, 3 kg and 2.5 kg at radial distances 75 mm, 85 mm and 50 mm and at the angular positions of 45^0, 135^0 and 240^0 respectively. The angular positions are measured counter clockwise from the reference line along x-axis. Determine the amount of the counter mass at a radial distance of 75 mm required for the static balance. (12)

Or

(b) An inside cylinder locomotive has its cylinder centre lines 0.7 m apart and has a stroke of 0.6 m. The rotating masses per cylinder are equivalent to 150 kg at the crank pin, and the reciprocating masses per cylinder to 180 kg. The wheel centre lines are 1.5 m apart. The cranks are at right angles. The whole of the rotating and 2/3 of the reciprocating masses are to b e balanced by masses are to be balanced by masses placed at a radius of 0.6 m. Find the magnitude and direction of the balancing masses.

13.(a) A gun is so designed that on firing the barrel recoils against a spring. A dash pot at the end of the recoil, allows the barrel to come back to its initial position within the minimum time without any oscillation. The gun barrel has a mass of 500 kg and a recoil spring of 300 N/mm. The barrel recoils 1 m on firing. Determine:

(i) The initial velocity of the gun barrel, and (8)

(ii) The critical damping co-efficient of the dash pot engaged at the end of the recoil stroke. (8)

Or

(b) The following data relate to a shaft held in long bearings.

Length of the shaft	-	1.2 m
Diameter of the shaft	-	14 mm

Mass of a rotor at midpoint - 16 kg

Eccentricity of centre of mass of rotor from centre of rotor - 0.4 mm

Modulus of elasticity of shaft material - 200 GN/mm^2

Permissible stress in shaft material - 70 x 10^6 N/mm^2

Determine the critical speed of the shaft and the range of the speed over which it is unsafe to run the shaft. Assume the shaft to be mass less.

14. (A) A single cylinder vertical diesel engine has a mass of 400 kg and is mounted on a steel chassis frame. The static deflection owing to the weights of the chassis is 2.4 mm. the reciprocating mass of the engine amounts to 18 kg and the stroke of the engine is 160 mm. a dashpot with a damping coefficient of 2 Ns/mm is also used to dampen the vibrations. In the steady state of the vibrations, determine:

(i) The amplitude of the vibrations if the driving shaft rotates at 500 rpm

(ii) The speed of the driving shaft when the resonance occurs.

Or

(b)The mass of an electric motor is 120 kg and it runs at 1500 r.p.m. The armature mass is 35 kg and its C.G lies 0.5 mm from the axis of rotation. The motor is mounted on five springs of negligible damping so that the force transmitted is one - eleventh of the impressed force. Assume that the mass of the motor is equally distributed among the five springs.

Determine :

(i) stiffness of each spring;

(ii) dynamic force transmitted to the base at the operating speed; and

(iii) natural frequency of the system.

15.(a) In porter governor, each of the four arms is 400 mm long. The upper arms are pivoted on the axis of the sleeve, whereas the lower arms are attached to the sleeve at a distance of 45 mm from the axis of the rotation. Each ball has a mass of 8 kg and the load on the sleeve is 60 kg. What will be the equilibrium speeds for the two extreme radii of 250 mm and 300 mm of rotation of the governor balls?

Or

(b)A four wheeled motor car of mass 200kg has a wheel base 2.5 m, track width 1.5 m and height of centre of gravity 500 mm above the ground level and lies at 1 m from the front axle. Each wheel has an effective diameter of 0.8 m and a moment of inertia of 0.8 kg-m^2. The drive shaft, engine flywheel and transmission are rotating at 4 times the speed of road wheel, in a clockwise direction when viewed from the front, and is equivalent to a mass of 75 kg having a radius of gyration of 100 mm. if the car is taking a right turn of 60 m radius at 60km/h, find the load on each wheel.

Reg .No: | | | | | | | | | | |

Question Paper code: 72157

B.E/B.TECH .DEGREE EXAMINATION, APRIL/MAY 2017

Fifth semester

Mechanical Engineering

ME 6505 – DYNAMICS OF MACHINES

(Common to Fourth Semester Mechanical Engineering (Sandwhich and Mechatronics Engineering)

(Regulation 2013)

Time: Three hours Maximum: 100 marks

Answer ALL questions

PART A – (10 X 2 =20 Marks)

1. What is meant by piston effort?
2. List the uses of turning moment diagram?
3. Why is balancing is necessary?
4. What is hammer blow in engines with reciprocating masses?
5. Write the expression for the equivalent stiffness of two springs connected in series.
6. List the types of damping.
7. Quote two examples of forced vibration.
8. What is vibration isolation?
9. Define governor effort.
10. What is gyroscopic couple?

PART B – (5 X 16 = 80 Marks)

11. (a) The crank pin circle radius of a horizontal engine is 300 mm. The mass of the reciprocating parts is 250 kg. When the crank has travelled 60^0 from I.D.C the difference between centers is 1.2 m and the cylinder bore is 0.5 m. If the engine runs at 250 rpm and if the effect of piston rod diameter is neglected, calculate the pressure on slide bars, the

thrust in the connecting rod, the tangential force on the crank pin and the turning moment on the crank shaft.

Or

(b) The turning moment diagram for multi cylinder engine has been drawn to a vertical scale of 1 mm = 650 Nm and a horizontal scale of 1 mm = 4.5^0. the areas above and below the mean torque line are -28, +380, -260, +310, -300, +242,-380, +265 and -229 mm^2. The fluctuation of speed is limited to ± 1.8 % of the mean speed which is 400 rpm. The density of the rim material is 7000 kg/m^3 and the width of the rim is 4.5 times its thickness. The centrifugal stress in the rim material is limited to 6 N/mm^2. Neglecting the effect of the boss, and the arms, determine the diameter and the cross section of the flywheel rim.

12.(a) A circular disc mounted on a shaft carries three attached masses of 4 kg, 3 kg and 2.5 kg at radial distances of 75 mm, 85 mm and 50 mm at an angular positions of 45^0, 135^0 and 240^0 respectively. The angular positions are measured counter clockwise from the reference line along X-axis. Determine the amount of the counter mass at a radial distance of 75 mm required for the static balance.

Or

(b) The following data refer to two cylinder with cranks at 90^0 reciprocating mass per cylinder = 300 kg, crank radius = 0.3 m; driving wheel diameter = 1.8 m; distance between cylinder centre lines = 0.65 m; distance between the driving wheel central planes = 1.55 m. determine the fraction of the reciprocating masses to be balanced, if the hammer blow is not to exceed 46 kN at 96.5 km/hr, the variation in tractive effort and the maximum swaying couple.

13.(a) (i)A mass of 5 kg hangs from a spring and makes damped oscillations. If the time of 50 complete oscillations is found to be 20 s, and the ratio of the first downward displacement to the sixth is found to be 22.5, find the stiffness of the spring and the damping coefficient.

(5)

(ii) A vibrating system has the following constants: m= 17.5 kg, k= 7 N/mm and c= 70 Ns/m. Estimate the damping factor and the natural frequency of the damped free vibrations logarithmic decrement and the ratio of any two consecutive oscillations.

(8)

Or

(b) A rotor of mass 4 kg is mounted midway on a 10 mm diameter horizontal shaft simply supported on a span of 0.5 m. The C.G of the rotor is 0.025 mm away from the geometric centre of the rotor. The shaft rotates at 2500 rpm. Find the amplitude of steady state vibrations and the dynamic force transmitted to the bearings. Take E = 205 Gpa.

14.(a) A vehicle of mass 1200 kg is travelling on a road, the surface of which varies sinusoidally with an amplitude of 0.05 m and wave length of 6 m. The suspension system has a spring constant of 400 kN/m and a damping factor of 0.5. If the vehicle speed is 100 km/hr, determine the displacement amplitude of the vehicle.

Or

(b) A centrifugal fan of mass 5 kg has a rotating unbalance of 0.258 kg m. When dampers having damping factor of 0.2 are used, specify the springs for mounting such that only 10 % of the unbalance force is transmitted to the floor. The fan is running at a constant speed of 1000 rpm.

15. (a) The arms of a porter governor are 250 mm long. The upper arms are pivoted on the axis of revolution, but he lower arms are attached to a sleeve at a distance of 50 mm from the axis of rotation. The weight of each ball is 80 N. determine the equilibrium speed when the radius of rotation of the balls is 150 mm. if the friction is equivalent to a load of 25 N at the sleeve, determine the range of speed for this position.

Or

(b) A ship is propelled by a turbine rotor of mass 500 kg and has a speed of 2400 rpm. The rotor has a radius of gyration of 0.5 m and rotates in clockwise direction when viewed from the stern. Find the gyroscopic effects in the following cases:

(i) The ship runs at a speed of 15 knots (1 knot = 1860 m/hr). It steers to left in a curve of 60 m radius.

(ii) The ship pitches ± 5^0 from the horizontal position with the time period of 20 s of simple harmonic motion.

(iii) The ship rolls with angular velocity of 0.04 rad/s clockwise when viewed from stern. Also find the maximum acceleration during pitching.

PART C – (1 X 15 = 15Marks)

16.(a) The following data refer to the transmission gear of a motor ship: Moment of inertia of flywheel is 4800 kg.m^2. Movement of inertia of propeller is 3200 kg.m^2, modulus of rigidity of shaft material is 80 Gpa and assuming the diameter of the torsionally equivalent crankshaft to be 320 mm and treating the arrangement as a three rotor system, determine the frequency of the free torsional vibrations.

Or

(b) A governor of the proell type has each arm 250 mm long. The pivots of the upper and lower arms are 25 mm from the axis. The central load acting on the sleeve has a mass of 25 kg and the each rotating ball has a mass of 3.2 kg. When the governor sleeve is in mid position, the extension like of the lower arm is vertical and the radius of the path of rotation of the masses is 175 mm. the vertical height of the governor is 200 mm. if the governor speed is 160 rpm when in mid position, find the length of the extension link and the tension in the upper arm.