DESIGN OF TRANSMISSION SYSTEMS
Notes

Subj. Code: ME8651

For Third year Sixth Semester Mechanical Students

PREPARED BY

Dr. P. Nagasankar
Professor / Mechanical & Dean (S&H),
Department of Mechanical Engineering,
Vel Tech High Tech Dr Rangarajan Dr Sakunthala Engineering College,
Avadi, Chennai-600062

DEPARTMENT OF MECHANICAL ENGINEERING
SIXTH SEMESTER / III YEAR

ME8651	**DESIGN OF TRANSMISSION SYSTEMS**	**L T P C**
		3 0 0 3

OBJECTIVES:

- To gain knowledge on the principles and procedure for the design of Mechanical power Transmission components.
- To understand the standard procedure available for Design of Transmission of Mechanical elements
- To learn to use standard data and catalogues (Use of P S G Design Data Book permitted)

UNIT I DESIGN OF FLEXIBLE ELEMENTS 9

Design of Flat belts and pulleys - Selection of V belts and pulleys – Selection of hoisting wire ropes and pulleys – Design of Transmission chains and Sprockets.

UNIT II SPUR GEARS AND PARALLEL AXIS HELICAL GEARS 9

Speed ratios and number of teeth-Force analysis -Tooth stresses - Dynamic effects – Fatigue strength- Factor of safety - Gear materials – Design of straight tooth spur & helical gears based on strength and wear considerations – Pressure angle in the normal and transverse plane- Equivalent number of teeth-forces for helical gears.

UNIT III BEVEL, WORM AND CROSS HELICAL GEARS 9

Straight bevel gear: Tooth terminology, tooth forces and stresses, equivalent number of teeth. Estimating the dimensions of pair of straight bevel gears. Worm Gear: Merits and demerits terminology. Thermal capacity, materials-forces and stresses, efficiency, estimating the size of the worm gear pair. Cross helical: Terminology-helix angles-Estimating the size of the pair of cross helical gears.

UNIT IV GEAR BOXES 9

Geometric progression - Standard step ratio - Ray diagram, kinematics layout -Design of sliding mesh gear box - Design of multi speed gear box for machine tool applications - Constant mesh gear box - Speed reducer unit. – Variable speed gear box, Fluid Couplings, Torque Converters for automotive applications.

UNIT V CAMS, CLUTCHES AND BRAKES 9

Cam Design: Types-pressure angle and under cutting base circle determination-forces and surface stresses. Design of plate clutches –axial clutches-cone clutches-internal expanding rim clutches- Electromagnetic clutches. Band and Block brakes - external shoe brakes – Internal expanding shoe brake.

TOTAL : 45 PERIODS

OUTCOMES:

- Upon completion of this course, the students can able to successfully design transmission components used in Engine and machines

TEXT BOOKS:

1. Bhandari V, "Design of Machine Elements", 3rd Edition, Tata McGraw-Hill Book Co, 2010.
2. Joseph Shigley, Charles Mischke, Richard Budynas and Keith Nisbett "Mechanical Engineering Design", 8th Edition, Tata McGraw-Hill, 2008.

REFERENCES:

1. Sundararajamoorthy T. V, Shanmugam .N, "Machine Design", Anuradha Publications, Chennai, 2003.
2. Gitin Maitra, L. Prasad "Hand book of Mechanical Design", 2nd Edition, Tata McGraw-Hill, 2001.
3. Prabhu. T.J., "Design of Transmission Elements", Mani Offset, Chennai, 2000.
4. C.S.Sharma, Kamlesh Purohit, "Design of Machine Elements", Prentice Hall of India, Pvt. Ltd., 2003.
5. Bernard Hamrock, Steven Schmid, Bo Jacobson, "Fundamentals of Machine Elements", 2nd Edition, Tata McGraw-Hill Book Co., 2006.
6. Robert C. Juvinall and Kurt M. Marshek, "Fundamentals of Machine Design", 4th Edition, Wiley, 2005
7. Alfred Hall, Halowenko, A and Laughlin, H., "Machine Design", Tata McGraw-Hill BookCo.(Schaum's Outline), 2010
8. Orthwein W, "Machine Component Design", Jaico Publishing Co, 2003.
9. Ansel Ugural, "Mechanical Design – An Integral Approach", 1st Edition, Tata McGraw-Hill Book Co, 2003.
10. Merhyle F. Spotts, Terry E. Shoup and Lee E. Hornberger, "Design of Machine Elements" 8th Edition, Printice Hall, 2003.
11. U.C.Jindal : Machine Design, "Design of Transmission System", Dorling Kindersley, 2010

UNIT I

DESIGN OF FLEXIBLE ELEMENTS

Characteristics of Belt Drives

S.No	Characteristics	Flat belts	V- belts	Toothed or timing belts
1.	Maximum velocity ratio	16	12	11
2.	Maximum belt speed (m/s)	35 to 110	25	80
3.	Slip	1 to 5%	1 to 5%	Nil
4.	Tension	High	Less	Very less
5.	Shock resistance	Good	Good	Fair
6.	Resistance to wear	Good	Fair	Good
7.	Dressing	Required	Not Required	Not Required
8.	Initial cost	Less	Less	Moderate

SELECTION OF A BELT DRIVE

Selection of a belt drive depends upon:

- Power to be transmitted
- Speed of driver and driven shafts
- Shaft relationship
- Service conditions
- Speed reduction ratio
- Centre distance
- Positive drive requirement
- Space available

VELOCITY RATIO OF BELT DRIVE

The ratio between the speeds of the driver and the follower or driven is known as velocity ratio.

D and d = Diameters of the driver and driven respectively,

N_1 and N_2 = Speeds of the driver and driven respectively, and

ω_1 and ω_2 = Angular velocities of the driver and driven respectively.

$$\textbf{Velocity ratio, } \frac{N2}{N1} = \frac{\omega 2}{\omega 1} = \frac{D}{d}$$

Effect of Belt Thickness on Velocity Ratio

When the thickness of belt *(t)* is considered, then velocity ratio is given by

$$\frac{N2}{N1} = \frac{D+t}{d+t}$$

Effect of Slip on Velocity Ratio

Let S1 = Percentage slip between the driver and the belt,
S2 = Percentage slip between the belt and the driven pulley, and
S = Total percentage slip = S1 + S2

$$\textbf{Velocity ratio, } \frac{N2}{N1} = \frac{D}{d}\left[1 - \frac{S1+S2}{100}\right] = \frac{D}{d}\left[1 - \frac{S}{100}\right]$$

If thickness of the belt *(t)* is considered, then

$$\textbf{Velocity ratio, } \frac{N2}{N1} = \frac{D+t}{d+t}\left[1 - \frac{S}{100}\right]$$

Effect of Creep of Belt

Let σ_1 and σ_2 = Stresses in the belt on the tight side and slack side respectively, and
E = Young's modulus of the belt material.

$$\textbf{Velocity ratio, } \frac{N2}{N1} = \frac{D}{d} \times \frac{E+\sqrt{\sigma 1}}{E+\sqrt{\sigma 2}}$$

GEOMETRICAL RELATIONSHIPS

For open belt drive: An open belt drive is shown in Fig.

Let D and *d* = Diameters of the larger and smaller pulleys respectively in meters,
C = Centre distance between the two pulleys in meters,
L = Total length of the belt in meters,
2α = The angle subtended between the straight portions of the belt in degrees,
α_s = Wrap angle (or angle of contact/lap) for small pulley in degrees, and
α_L = Wrap angle for large pulley in degrees.

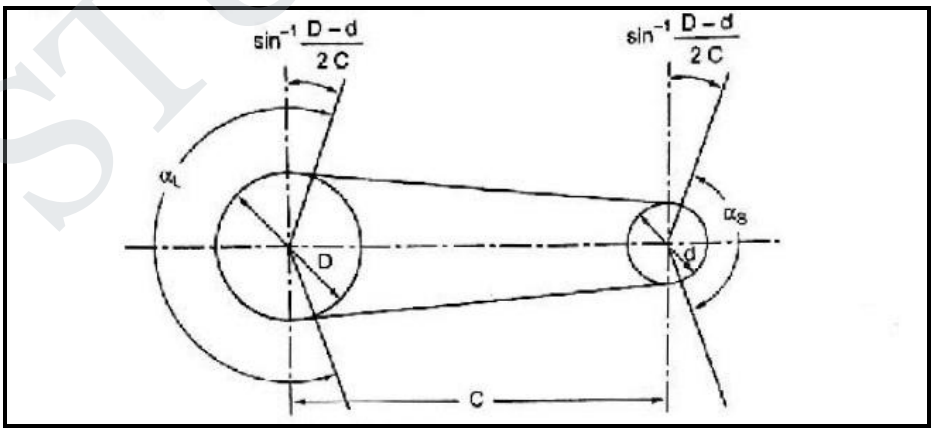

OPEN BELT DRIVE

$$\sin\alpha = \frac{D-d}{2C}$$

also $\alpha_s = (180 - 2\alpha)$ and $\alpha_L = (180 + 2\alpha)$

Wrap angle for smaller pulley, $\alpha_s = 180 - 2\,\text{Sin}^{-1}\left(\frac{D-d}{2C}\right)$

Wrap angle for larger pulley, $\alpha_L = 180 + 2\,\text{Sin}^{-1}\left(\frac{D-d}{2C}\right)$

and Length of the belt, $L = 2C + \left(\frac{\pi}{2}\right)(D + d) + \frac{(D-d)^2}{4C}$

For Crossed Belt Drive:

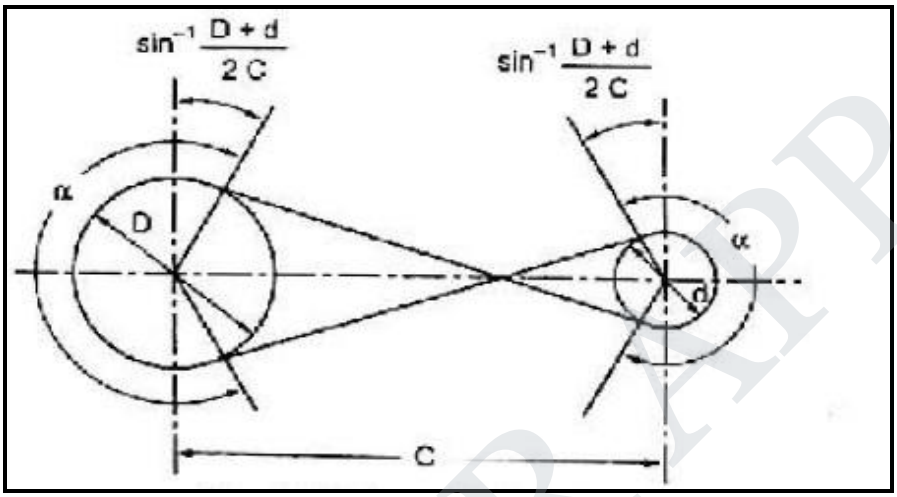

$\sin\alpha = \left(\frac{D+d}{2C}\right)$

also $\alpha_s = \alpha_L = (180 + 2\alpha)$

Therefore, wrap angels for smaller and larger pulleys are same and is given by

$\alpha_s = \alpha_L = 180 + 2\,\text{Sin}^{-1}\left(\frac{D+d}{2C}\right)$

and Length of the belt, $L = 2C + \left(\frac{\pi}{2}\right)(D + d) + \frac{(D+d)^2}{4C}$

STRESSES IN THE BELT

The various stresses acting at various portions of the belt are.

1. Stress due to maximum working tension, TI (σ_t):

$$\sigma_t = \frac{Tightsidetension}{Cross-sectionalareaofthebelt} = \frac{T_1}{b.t}$$

Where b = width of the belt, and

t = Thickness of the belt.

2. Stress due to bending of the belt over the pulley*(σ_b):*

$$(\sigma_b) = \frac{E.t}{d}$$

Where E = young's modulus of the belt over the pulley *(σ_b)*

d = diameter of the smaller pulley

3. Stress due to the effect of centrifugal force *(σ_c)*

$$(\sigma_c) = \frac{\text{centrifugal force}}{\text{cross sectional area of the belt}} = \frac{mv^2}{b.t} = \rho v^2$$

Where ρ = *density of the belt material in Kg/m*^{3}

It is noted that the stress will be maximum when the belt moves over the smaller pulley. Therefore the maximum stress in the tight side of the smaller pulley is given by

$$\sigma_{max} = \sigma_t + \sigma_b + \sigma_c$$

Permissible stresses

Leather belt = 2 to 3.45 M Pa

Rubber belt = 1 to 1.7 M Pa

Fabric belt = Less that 1.5 M Pa

DESIGN OF FLAT BELT PULLEYS

Materials Used for Pulleys

The commonly used pulley materials are: Cast iron

- Fabricated steel
- Wood or fiber.
- Compressed paper
- Cast Iron pulleys are most widely used in actual practice.

Design Procedure for Cast Iron Pulleys

The cross-section of a cast iron pulley is shown in Fig.1.13. (**Refer PSG data book, page no. 7.56).**

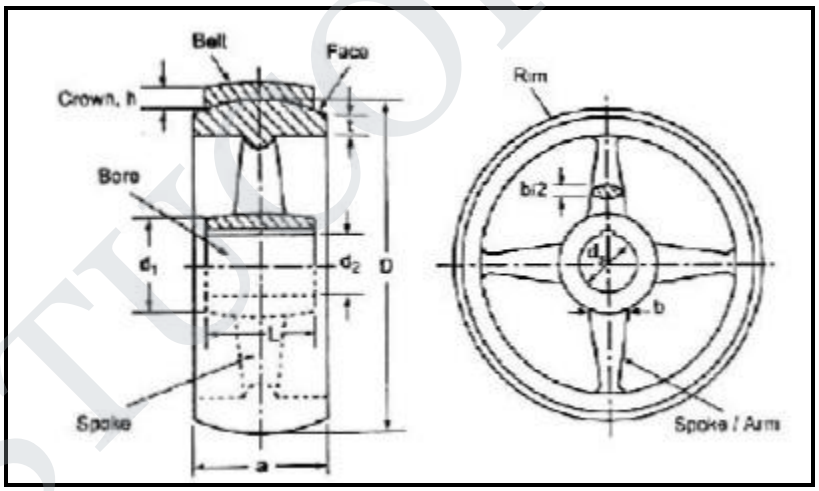

D = Diameter of the pulley,

a = Width of the pulley,

b = Thickness of the arm,

d_1 = Diameter of the hub,

d_2= Diameter of the shaft, and

I = Length of the hub,

t = Thickness of the rim,

1. Dimension of pulley:

(i) Diameter of the pulley (D): Obtain the diameter of the pulley either from velocity ration consideration or centrifugal stress consideration. We know that the centrifugal stress induced in the rim of the pulley,

$$\sigma_c = \rho v^2$$

Where ρ = Density of the rim material.

= 7200 kg/m^3 for cast iron, and

v = Velocity of the rim = $\frac{\pi DN}{60}$ D being the diameter of pulley and N the speed of the pulley.

(ii)Width of the pulley (a): If the width of the belt is known, then select the width of the pulley referring to tables **[from data book, page no. 7.54]**

2. Dimension of arms :

(i) Number of arms (n):

Number of arms $\begin{cases} 4 \text{ for diameters upto } 450mm \\ 6 \text{ for diameters over } 450mm \end{cases}$ ….**[from data book, page no. 7.56]**

(ii)Cross-section of arms (b and b/2):

Major axis of elliptical section near the boss, $\mathbf{b = 2.94}\sqrt[3]{\frac{aD}{4n}}$ for single belt, and

$$= \mathbf{2.94}\sqrt[3]{\frac{aD}{2n}} \text{ for double belt.}$$

Minor axis of elliptical section near the boss = $\frac{b}{2}$

(iii) Arms raper : The arms are tapered from hub to rim.

Taper = 4mm per 100mm

(iv) Radius of the cross-section of arms : r = $\frac{3}{4}$b

3. Dimensions of hub:

(i) Diameter of hub(d_1):

Diameter of the hub(d_1) = (1.7 to 2.0)* Diameter of the shaft (d_2)

(ii)Length of the hub(l):

Minimum length of bore, l = $\frac{2}{3}$a

Where, **a = width of pulley.**

4. Crowning of pulley rim:

Selection of crown height (h): Knowing diameter (D) and width (a) of the pulley, select the crown height (h) referring to tables 1.7(a) and (b)

Table 1.7(a). Crown of flat pulleys (40 to 355 mm diameter) **(from data book, page no. 7.55)**

(Crown is unrelated to the width in this diameter range)

Table 1.7(b). Crown of flat pulleys (40 to 2000mm diameter) **(from data book,page no. 7.55)**

(Crown varies with the width in this diameter range)

DESIGN OF FLAT BELT

The two different design procedures used are:

(i) Using the manufacturer's data, and

(ii) Using the basic equations.

DESIGN OF FLAT BELT DRIVE BASED ON MANUFACTURER'S DATA

1. Selection of pulley diameters:

Select the pulley diameters and angle of contact (i.e., wrap angle). By using the given belt speed and assuming number of plies, minimum pulley diameter is chosen. Use Table to choose the diameter of the smaller pulley.**(from data book, page no. 7.52)**

2. Calculation of design power in KW:

Calculate the design KW by using the relationship given below

$$\textbf{Design KW} = \frac{\text{Rated KW x Load correction factor } (K_s)}{\text{Arc of contact factor } (K_\alpha) \text{ x Small pulley factor } (K_d)}$$

i. **Load correction factor (k_s):** This factor is used to account for the nature of application and type of load. The value of K_s can be selected from table 1.9. (**From data book, page no. 7.53)**

ii. **Arc of contact factor(k_α):**

Arc of contact= 180 –$(\frac{D-d}{c})$*60 ……..[from data book pg.no 7.54]

Where D and d are Diameter of larger and smaller pulley resp.

C is the centre distance.

iii. **Small pulley factor (k_d):**

Table. Small pulley factor, K_d (from data book, page no. 7.62)

3. Selection of belting:

Select a belt referring from table below.

Table. Load rating of fabric belts per mm width per ply at 180~arc of contact at 10m/s belt speed **(from data book, page no.7.54)**

4. Load rating correction:

Correct the load rating to the actual speed of the belt by using the relation given below.

Load rating at V m/s = Load rating at 10 m/s x $\frac{V}{10}$ … [From data book, page no. 7.54]

5. Determination of belt width(b):

Determine the belt width by using the following relation:

$$\textbf{Width of belt} = \frac{\text{Design power}}{\text{Load rating x No. of plies}}$$

Knowing the smaller pulley diameter and velocity of the belt, and consulting table. The number of plies can be found.

The calculated belt width should be rounded off to the standard belt width by consulting Table. Standard widths of transmission belting **(from data book no. 7.52)**

6. Determination of pulley width(B):

Detemine the pulley width, by referring the tables1.6 (a and b)**[From data book, page no. 7.54]**

Table 1.6(a). Pulley width **… [From data book, page no. 7.54]**

Table1.6(b). Recommended series of width of flat pulley,mm**[From data book, page no. 7.55]**

7. Calculation of belt length (L):

Calculation the length of the belt by using the equation given below.

For open belt drive: $L = 2C + (\frac{\pi}{2})(D+d) + \frac{(D-d)^2}{4C}$ **[From data book, page no. 7.53]**

For crossed belt drive: $L = 2C + (\frac{\pi}{2})(D+d) + \frac{(D+d)^2}{4C}$ **[From data book, page no. 7.53]**

$$\frac{T_1 - mv^2}{T_2 - mv^2} = e^{\frac{\mu\alpha}{\sin\beta}} = e^{\mu\alpha.\mathrm{cosec}\beta}$$

Where T_1, T2, m, v and α have usual meaning, and

2β is the V- groove angle (=180^0 for flat belt)

V -Belts and Pulleys

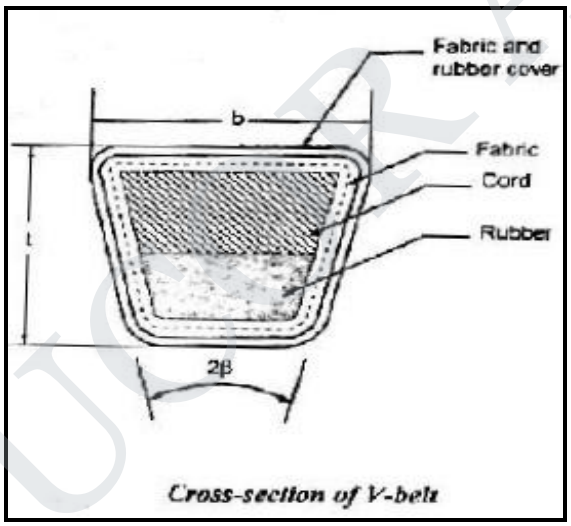

Cross-section of V-belt

Materials of V-belts

V -belts are made of cotton fabric and cords molded in rubber and covered with fabricand rubber, as shown in Fig

Specification of V-belts

V-belts are designated by its type and nominal inside length. For example, a C2845belt has a cross-section of type C and has a nominal inside length of2845 mm.

RATIO OF DRIVING TENSIONS FOR V-BELT

$$\frac{T_1}{T_2} = e^{\mu\alpha/\sin\beta} = e^{\mu\alpha.\mathrm{Cosec}\beta}$$

Where TI and T2 = Tensions in the tight and slack sides respectively,

2β = Angle of the groove, and

μ = Coefficient of friction between the belt and sides of the groove.

Note. Number of V-belt = $\frac{TotalPowerTransmitted}{PowerTransmitted}$

DESIGN OF SHEAVES (OR V-GROOVED PULLEYS)

1**. Materials of V-grooved pulleys:**

The commonly used sheave materials and their characteristics are summarized In Table 2.1.

Table 2.1

Material of sheaves	Characteristics and /or applications
1. cast iron	It is economical, stable and durable also it has excellent friction characteristics on V-belts.
2.Pressed steel	It is lighter and cheaper but it gives rise to excessive belt slip wear and noise.
3.Formed steel	Primarily used in automotive and agricultural purposes
4.Diecast aluminum	Used for special applications

2. Dimensions of sheaves:

The cross-section of a sheave (i.e., V-grooved pulley) for V-belt drives IS shown In Fig.2.2. **(Refer data book, page no. 7.70).**

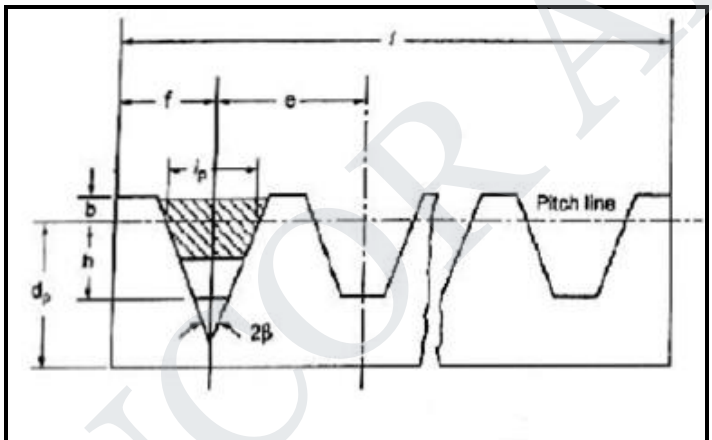

Cross -Sectional of a Sheave

where

Ip= Pitch width,

I = Face width,

f = Edge of pulley to first groove centre,

e = centre to centre distance of grooves

d_p = pulley pitch diameter,

b = Minimum distance down to pitch line,

h = Minimum depth below the pitch line.

Table 2.2 The various dimensions of standard V-grooved pulley in mm**(from data book, page no. 7.70)**

Note Face width, l= (n – 1) e + 2f

The two different design procedures used are:

(i) Using the manufacturer's data, and

(ii) Using the basic equations.

DESIGN OF V-BELT DRIVE BASED ON MANUFACTURER'S DATA

The design of V-belt is primarily concerned with the selection of belt section, selection of pulley diameters, determination of number of belts and centre distance required for the given transmitted power.

DESIGN PROCEDURE:

1. **Selection of belt section:**

   Consulting Table 2.3, select the cross-section of a belt (i.e., type of belt) depending on thepower to be transmitted. **… [From data book, page no. 7.58]**

2. **Selection of pulley diameters (d and D):**

   Select small pulley diameter (d) from Table 2.3. Then using the speed ratio, calculate the large pulley diameter (D). These pulley diameters should be rounded off to a standard diameter by using Table 1.5. **… [From data book, page no. 7.58]**

3. **Determination of nominal pitch length:**

   Determine the length of the belt L (which is also known as nominal inside length) by using the formula,

   L = 2C +$(\frac{\pi}{2})(D+d)+\frac{(D-d)^2}{4C}$**… [From data book, page no. 7.53]**

   For the calculated nominal inside length and belt section, consulting Table 2.5, select the next standard pitch length.

   Tile nominal pitch lengthis defined as the circumferential length of the belt at the pitch width (i. e., the width at the neutral axis of the belt). The value of the pitch width remains constant for each type of belt irrespective of the groove angle .

   For pitch length, add with inside length, 36 mm for A belt, 43 mm for B, 56 mm for C. 79 mm for 0 and 92 mm for E belt.

4. **Selection of various modification factors:**In order to calculate the design power the following modification factors have to bedetermined.

(i) Length correction factor (F_C):

Table.Nominal inside length, nominal pitch length and length correction/actor/or standard sizes 0/ JI-belts **(from data book, page no. 7.58, 7.59 and 7.60)** (The values for a few cases only given)

(ii) Correction factor for arc of contact (F_d):

- First determine the angle of contact (or arc of contact) of the smaller pulley.
- **Arc of contact = 180° -** $(\frac{D-d}{C})$**x60°… [From data book, page no 7.68]**
- For the calculated arc of contact, select the correction factor from Table 2.6.
- Arc of contact factor is taken into account because the power transmitted may be limited by slipping of the belt on the smaller pulley.

Table 2.6.Arc 0/ contact/actor, Fd…[From data book, page no. 7.68]

(The values/or a few cases are given below)

(iii) Service factor (F_a):

- Select the service factor (Fa) consulting Table 2.7.

- The service factor takes into account the severity of the load transmitted which depends upon the characteristics of the driving and driven units.

Table 2.7.Service factor for V-Belts, Fa…**[From data book, page no. 7.69]**
Note. The details of driving units and driven machines under different duties are available in the**data book, page no. 7.69.**

6. Calculation of maximum power capacity :

Calculate the maximum power capacity (in kW) of a V-belt using the formulas given in Table 2.8…..**[From data book, page no. 7.62]**

where kW = Maximum power in kW at 180^0 arc of contact for a belt of average length,
S = Belt speed, m/s,
d_e= Equivalent pitch diameter = *dp*x F*b*,
d_p= Pitch diameter of the smaller pulley, mm, and
F_2= Small diameter factor to account for variation of arc of contact, from Table 2.9…..**[From data book, page no. 7.62]**

7. Determination of number of belts (n_b):

Determine number of belts the (n_b) from the relation,

$$n_b = \frac{P * F_a}{KW * F_c * F_d}$$ ….**[From data book, page no. 7.70]**

Where P = Drive power, in kW,
Fa= Service factor for V-belts,
KW = Rated power (i.e., rating of a single V-belt),
Fc = Length correction factor, and
F_d= Correction factor for arc of contact.

8. Calculation of actual centre distance:

Calculate the actual centre distance from the relation,

$$C_{actual} = A + \sqrt{A^2 - B}$$ **… [From data book, page no. 7.61]**

Where $A = \frac{L}{4} - \pi \left[\frac{D+d}{8}\right]$

$B = \frac{(D-d)^2}{8}$, **and**

L = Nominal pitch length of the belt from table 2.5 (refer step 4)

WIRE ROPES AND PULLEYS

Materials of Wire Ropes

The commonly used materials for wire ropes are \ wrought iron, cast steel, plow steel and alloy steel. For special purposes copper, bronze, aluminum alloys and stainless steel are also used.

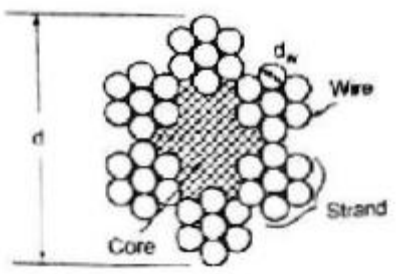

Fig. 3.1. 6 × 7 wire rope

SPECIFICATION OF WIRE ROPES

The wire ropes are specified (or designated) by the number of strands and the number of wires in each strand. For example, a 6 x 7 rope means a rope made from six strands with seven wires in each strand.

GUIDELINES FOR THE SELECTION OF WIRE ROPE

The wire rope is selected based on its application. The shows the standard designation of wire ropes and their applications.

STRESSES IN WIRE ROPES

The various types of stresses induced in a wire rope are:

1. Direct stress due to the weight of the load to be lifted and weight of the rope (σ_d):

Let W = Weight of the load to be lifted,

W = Weight of the rope, and

A = Area of useful cross-section of the rope.

$$\textbf{Direct stress}\ \sigma_d = \frac{W+W_r}{A}$$

2. Bending stress when the rope passes over the sheave or drum (σ_b):

$$\textbf{Bending stress, } \sigma_b = \frac{d_W E_r}{D}$$

Where E_r **= modulus of elasticity of the wire rope**

= 0.84*10^5 N/mm^2, for steel ropes of ordinary construction,

= $\frac{3}{8}$*E, E= Modulus of elasticity of the wire material

d_W= diameter of the wire,

D = diameter of sheave.

3. Stress due to acceleration (σ_a):

Due to change in speed, an additional stress is induced. The stress due to acceleration is given by

$$\sigma_a = \left(\frac{W+W_r}{g}\right)\frac{a}{A}$$

Where a = Acceleration of rope and local during hoisting (not at starting or stopping)

= $\frac{v_2+v_1}{t}$; **(v_2-v_1)** is the change in speed in 't' seconds.

4. Stress during starting and stopping (σ_{st}):

(i) When there is no slack in the rope:

$$\sigma_{st} = 2 \times \sigma_d$$

(ii) When there is slack in the rope before starting or slopping, then there will be a considerable impact load on the rope.

$$\sigma_{st} = \frac{W + W_r}{A}\left[1 + \sqrt{1 + \frac{2.a_s.h.E_r}{\sigma_d.l.g}}\right]$$

Where a_s = Acceleration during starting or stopping,

h = Slack during starting, and

l = Length of the rope.

Effective stress:

(i) Effective stress in the rope during normal working,

$$\sigma_{en} = \sigma_d + \sigma_b$$

(ii) Effective stress in the rope during starting,

$$\sigma_{est} = \sigma_{st} + \sigma_b$$

(iii) Effective stress in the rope during acceleration of the load,

$$\sigma_{ea} = \sigma_d + \sigma_b + \sigma_a$$

RECOMMENDED FACTOR OF SAFETY FOR WIRE ROPES

The recommended factor of safety for wire ropes based on .the ultimate strength are given in Table.

Table.Recommended factor of safety for wire ropes, n' (from data book, page no. 9.1)

DESIGN OF WIRE ROPES

DESIGN PROCEDURE FOR A WIRE ROPE

1. Selection of suitable wire rope:

First select the suitable type of wire rope for the given application, from Table 3.1.

2. Calculation of design load:

Calculate the design load by assuming a larger factor of safety, say 15 (or find the design load by assuming a factor of safety 2 to 2.5 times the factor of safety given in Table 3.2).

Design load = Load to be lifted x Assumed factor of safety

3. Selection of wire rope diameter (d):

Select the wire rope diameter (d) from Table 3.4, Group 6 x 19 **(from data book, page no. 9.5 and 9.6)** by taking the design load as the breaking strength.

4. Calculation of sheave diameter (D :

Consulting Table 3.5. (**from data book, page no. 9.1)** obtain the diameter of sheave (or drum). Always larger sheave diameter is preferred.

- Ratio for 50 *m/min* of rope speeds - to be increased by 8% for each 'additional speed of 50m/min

5. Selection of the area of useful cross-section of the rope (A):

Consulting Table 3.6, select the area of useful cross-section of the rope.

Type of construction	Metallic area of rope A, mm^2
6 x 7	$0.38\ d^2$
6 x 19	$0.4d^2$
6 x 37	$0.4d^2$

6. Calculation of wire diameter (dw):

Calculate the diameter of wire using the relation

$$d_w = \frac{d}{1.5\sqrt{i}}$$

where i = Number of wires in the rope

= Number of strands x Number of wires in each strand.

7. Selection of weight of rope (W,):

Obtain the rope weight *(Wr)* from Table 3.4.

8. Calculation of various loads:

Calculate the various loads using the relations given below.

(i) Direct load, $W_d = W + W_r$

(ii) Bending load, $W_b = \sigma_b \times A = E_r \cdot \frac{d_w}{D} \times A$

(iii) Acceleration load due to change in the speed of hoisting,

$$\mathbf{Wa = [\frac{W + W_r}{g}]\ a}$$

Where $a = \frac{v_2 - v_1}{t}$ (When speed of the rope changes from v_1 to v_2 in t seconds)

(iv) Starting or stopping load:

(a) When there is no slack in the rope:

Starting load, $WS1 = 2 \cdot W_d = 2\ (W + Wr)$

(b) When there is slack in the rope:

Starting load, $W_{st} = \sigma st \times A = (W + Wr)\ [1 + \sqrt{1 + \frac{2 \cdot a_s \cdot h \cdot E_r}{\sigma_d \cdot l \cdot g}}\ ]$

9. Calculation of effective loads:

(i) Effective load on the rope during normal working, $W_{en} = W_d + W_b$

(ii) Effective load on the rope during acceleration of the load, $Wea = W_d + W_b + W_a$

(iii) Effective load on the rope during starting, $West = W_b + W_{st}$

10. Calculation of working (or actual) factor of safety (FS_w):

Working factor of safety, FS_w = $\frac{\text{Breakingloadfromtable3.4fortheselectedrope}}{\text{Effectiveloadduringacceleration } (W_{ea})}$

11. Check for safe design:

Compare the calculated working factor of safety (FS_w) with the recommended factor of safety *(n')* given in Table 3.2. If the working factor of safety is greater than the recommended factor of safety *(i. e.,* $FS_w > n'$*)*, then the design is safe and satisfactory.

If FSw<*n'*, then the design is not satisfactory. Now choose some other rope with greater breaking strength or increase the number of ropes.

12. Calculation of number of ropes:

$$\textbf{Number of ropes} = \frac{\text{Recommended factor of safety}}{\text{Working factor of safety}} = \frac{n'}{FS_w}$$

FAILURE OF ROPES

The amount of wear that occurs depends upon the pressure between the rope and the sheave and is given

$$P = \frac{2T}{dxD}$$

T = Tension in rope

d = Diameter of rope, and

D = sheave diameter

CHAIN DRIVES

TYPES OF CHAIN DRIVES

The common types of chains are:

1. Link chains (or welded chains),
2. Transmission chains (or roller chains,) and
3. Silent chains (or inverted tooth chains).

LINK CHAINS

Link chains, also known as *welded load chains*, are widely used

- In low capacity hoisting machines such as hoists, winches and hand operated cranes as the main lifting appliances.
- As slings for suspending the load from the hook or other device.

DIMENSIONS OF A LINK CHAIN

They are pitch (t) equal to the inside length of the link, outside width (B) and diameter (d) of the chain bar.

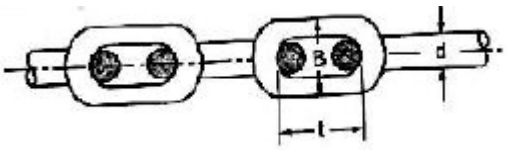

CLASSIFICATION OF LINK CHAINS

1. Depending on the ratio between the pitch and the diameter of the chain bar:

(a) Short link chains: If t ≤3 d, then the chains are known as short link chains.

(b) Long link chains: If I> 3 d, then the chains are known as long link chains.

2. Depending on the manufacturing accuracy:

(a) Pitched chains: When the permissible deviations from the nominal pitch size is

within60.03 d and from the outside width is within 6 0.05 d, then the chain is called as Pitched chain.

(b) Calibrated chains :When the permissible deviations is within i 0.1 d of the nominal Size in pitch and outside width, then the chain is known as calibrated chain.

SELECTION OF LINK CHAINS

The general formula for selecting link chains in tension is given by

$$P_{safe} = \frac{P_{br}}{n}$$

P_{safe} = Safe load carried by the chain,

P_{br} = Breaking load of the chain, and

n = Factor of safety

TRANSMISSION (OR ROLLER) CHAINS

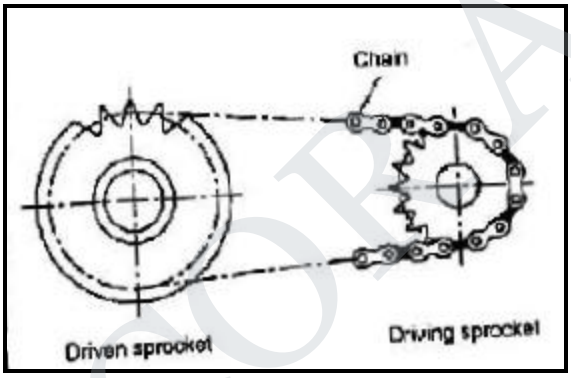

CHAIN MATERIALS

- Link plates are made of cold-rolled, medium-carbon or alloy steels such asC45, C50 and 40 Crl.
- Pins, bushings and rollers are made of carburizing steels such as CIS, C20, and 30 Ni4 Crl.

SPECIFICATION OF A ROLLER CHAIN

Roller chain is specified by three dimensions - pitch, width and diameter.

Pitch: It is the distance from centre to centre of adjacent pins or rivets.

Width: It is the nominal width of the link or the length of the pin.

Diameter: It refers to the actual outside diameter of the roller.

Roller chains are available in single-row or multi-row construction such as simplex, duplex or triplex strands as shown in Fig. (Refer data book, page no. 7.71).

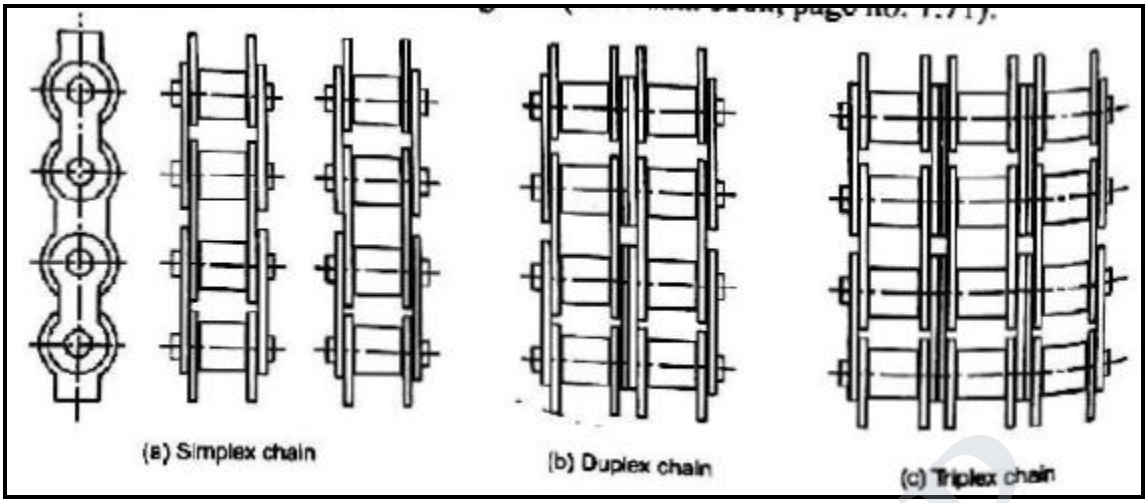

Shows a sprocket driving a chain in a counter clockwise direction.

Let p = Chain pitch,

a = Pitch angle,

$\alpha/2$ = Angle of articulation,

D = Pitch circle diameter of the sprocket, and

z = Number of teeth on the sprocket.

CHORDAL (OR POLYGONAL) ACTION

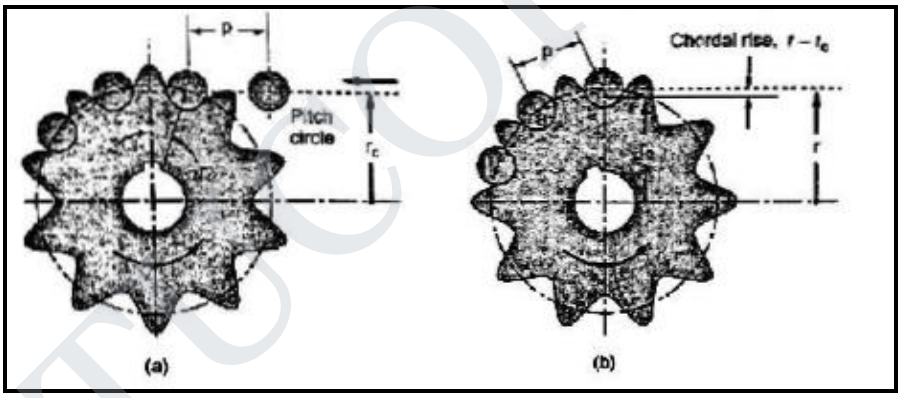

SPROCKET DIAMETERS

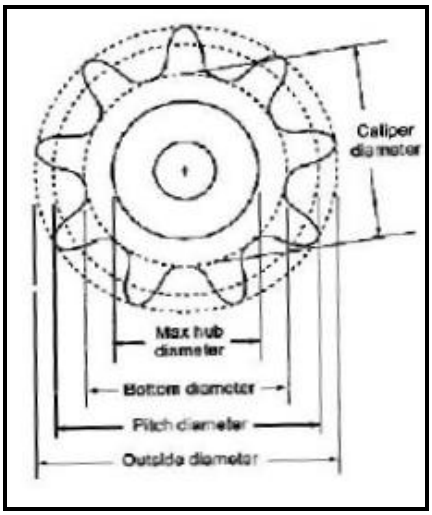

The equations for those diameters are :

(i) Pitch diameter = $\frac{p}{\sin(\frac{180}{z})}$

(ii) Outside diameter = **p[0.6 cot ($\frac{180}{z}$)]**

(iii) Bottom diameter = Pitch diameter – Roller outside diameter

(iv) Caliper diameter = Pitch diameter x cos ($\frac{90}{z}$) – Roller outside diameter

(v) Maximum hub diameter = **p [cot ($\frac{180}{z}$) - 1] – 0.03**

TOOTH FORM

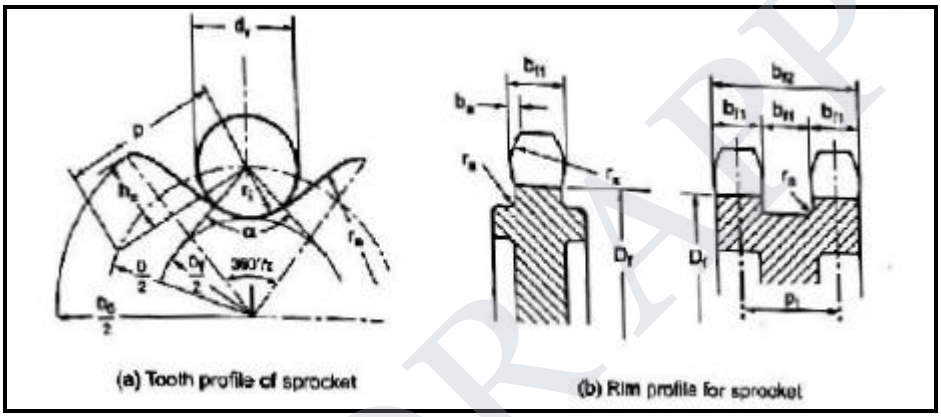

DESIGN OF SILENT CHAIN

SILENT (OR INVERTED-TOOTH) CHAIN

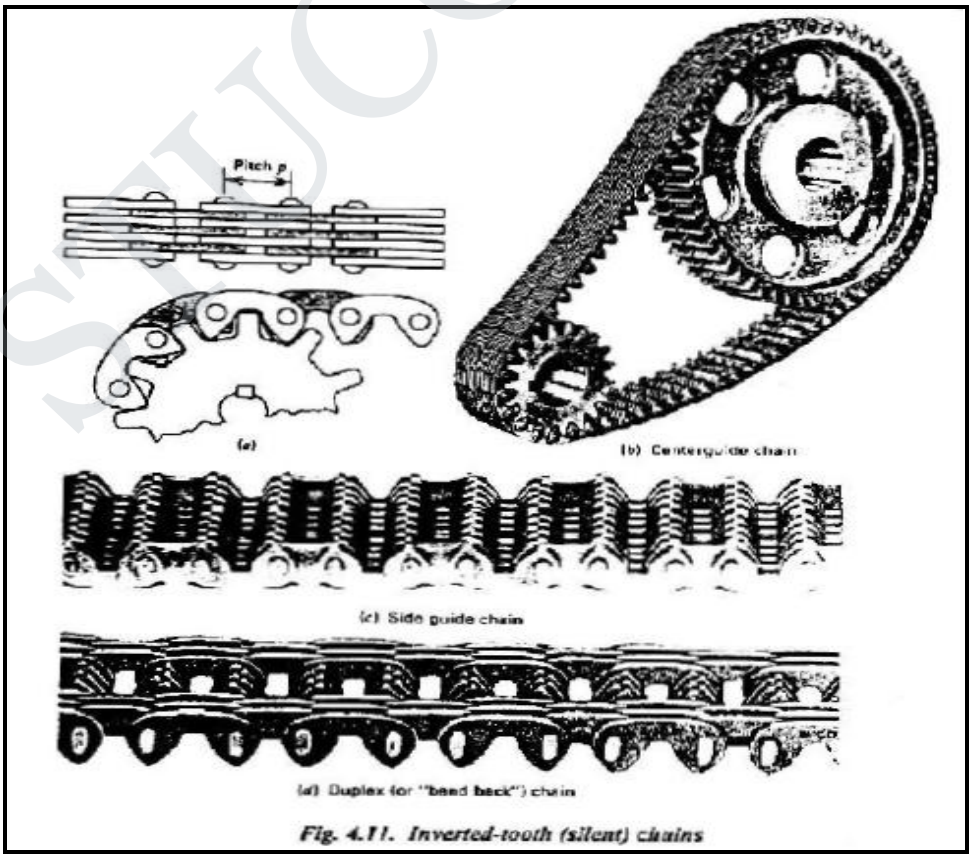

Fig. 4.11. Inverted-tooth (silent) chains

TYPES OF SILENT CHAINS

Depending upon the type of joint between links, the silent chains are classified into:

(i) Reynolds chain: In Reynolds chain, the links are connected by pins resulting in sliding friction.

(ii) Morse chain: In Morse chain, the rocker pins are used.

DESIGN PROCEDURE OF ROLLER CHAIN

1. Selection of the transmission ratio (i):

Select a preferred transmission ratio, i **(from data book, page no. 7.74)**

1, 1.12, 1.25, 1.4, 1.6, 1.8, 2, 2.25, 3.15, 4, 4.5, 5, 5.6, 6.3 and 7.1

From the pitch range obtained, consulting Table 4.4, select a suitable standard pitch.**(From data book, page no. 7. 74)**

2. Selection of number of teeth on the driver sprocket (Z_1):

Select the number of teeth on the driver sprocket (Z_1)….[**From data book, page no. 7.74]**

3. Determination of number of teeth on the driven sprocket (Z_2):

$Z_2 = i^* Z_1$….[From data book, page no. 7.74]

Recommended value of Z_2:Z_{2max} = 100 to 120 ….[**From data book, page no. 7.74]**

4. Selection of standard pitch (p):

a= (30 to 50)p

$a = 30p_{max}$ $a = 50p_{min}$

From the pitch range obtained, consulting table 4.4, select a suitable standard pitch.

[**From data book, page no. 7.74]**

5. Selection of the chain:-

(From data book, page nos. 7.71, 7.72 and 7. 73.

This table gives some details for a few Chains.)

Note R - Simplex, DR - Duplex, TR – Triplex

6. Calculation of Total load on The Driving Side of the Chain (P_T):

$$\begin{Bmatrix}\textit{Total load on the}\\ \textit{Driving side } (P_T)\end{Bmatrix} = \begin{Bmatrix}\textit{Tangential force}\\ \textit{due to}\\ \textit{power transmission}(P_t)\end{Bmatrix} + \begin{Bmatrix}\textit{Centrifugal tension}(P_c)\\ \textit{due to speed}\\ \textit{of the chain}\end{Bmatrix} + \begin{Bmatrix}\textit{Tension}\\ \textit{due to chain}\\ \textit{sagging}(P_S)\end{Bmatrix}$$

$P_T = P_t + P_c + P_s$ ….[From data book, page no. 7.78]

(i) To find tangential force (P_t):

$$P_t = \frac{1020\,N}{v} \ldots \text{[From data book, page no. 7.78]}$$

Where N = Transmitted power in KW, and

$$v = \text{Chain velocity in m/s} = \frac{z_1 \times p \times N_1}{60 \times 1000} \text{ or } \frac{z_1 \times p \times N_2}{60 \times 1000}$$

(ii) To find centrifugal tension (P_c):

$P_c = mv^2$…**[From data book, page no. 7.78]**

Where m = Mass of chain / meter,

V= velocity of chain , m/s

(iii) To find tension due to sagging (P_s):

$P_s = k \,.\, w \,.\, a$

where k = Coefficient of sag taking into account the arrangement of chain drive,

W = Weight of chain / meter = m- g, and

a = Centre distance in meter.

Coefficient for sag, k …**[From data book, page no. 7.76]**

7. **Calculation of service factor (K_s):**

The service factor is used to account for variations in the driving and driven sources for roller chains.

Service factor, $K_s = k_1 . k_2 . k_3 . k_4 . k_5 . k_6$…**[From data book, page no. 7.76]**

k_1= Load factor **, (from data book, page no.7.76)**

k_2=Factor for distance regulation**, (from data book, page no.7.76)**

k_3 = Factor for centre distance of sprockets**, (from data book, page no.7.76)**

k_4 = Factor for position of sprocket **(from data book, page no.7.77)**

k_5 = Lubrication factor **(from data book, page no.7.77)**

k_6 = Rating factor**(from data book, page no.7.77)**

8. **Calculation of design load:**

Design load = Total load on the driving side of the chain x Service factor

Design load = $P_T \times K_s$

9. **Calculation of working factor of safety (FS_w):**

Factor of safety = $\frac{\text{Breaking load Q}}{\text{Design load}} = \frac{Q}{P_T \times K_s}$

Where Q is breaking load got **from data book, page no.7.72**

10. Check for factor of safety:

[**Refer From data book, page no. 7.77]**

If the working factor of safety (FS_w) is greater than the recommended minimum value of factor of safety (n') then the design is safe and satisfactory.

11. Check for the bearing stress in the rollers:

Calculate the bearing stress in the roller using the formula

$$\sigma = \frac{Tangential\ load}{Bearing\ area} = \frac{P_t * K_s}{A}$$

Where A is Bearing Area got **From data book, page no. 7.72**

Take the values for allowable bearing stress,[σ], N/mm^2 …[**From data book, page no. 7.77]**

σ<[σ]. The design is safe and satisfactory.

12. Calculation of actual length of chain (L):

Calculate the number of links(l_p) using the formula

$$L = 2a_p + \frac{Z_1+Z_2}{2} + \frac{\left[\frac{Z_1+Z_2}{2\pi}\right]^2}{a_p}$$ **…[From data book, page no. 7.75.]**

$$a_p = \frac{a_0}{p} = \frac{Initial\ centre\ distance}{pitch}$$

$$L = l_p \times p$$

13. Calculation of exact centre distance:

Exact centre distance, $a = \frac{e + \sqrt{e^2 + 8M}}{4} \times p$ **…[From data book, page no. 7.75.]**

Where $e = I_p - \left(\frac{Z_1+Z_2}{2}\right)$ **…[From data book, page no. 7.75.]**

$M = \left(\frac{Z_1+Z_2}{2\pi}\right)^2$ **= Constant**

14. Calculation of pitch circle diameters (pcd) of sprockets:

Pcd of smaller sprocket, $d_1 = \frac{p}{\sin\left(\frac{180}{Z_1}\right)}$

Pcd of Larger sprocket, $d_2 = \frac{p}{\sin\left(\frac{180}{Z_2}\right)}$ **…[From data book, page no. 7.78.]**

Smaller sprocket outside diameter, $d_{01} = d_1 + 0.8d_r$

Larger sprocket outside diameter, $d_{02} = d_2 + 0.8d_r$

Where d_r **is the roller diameter**

UNIT – I: DESIGN OF TRANSMISSION SYSTEMS FOR FLEXIBLE ELEMENTS (PART –A)

1. What are the factors upon which the coefficient of friction between the belt and pulley depends? (May/june2012) (May/June 2014)

Soln. *The coefficient of friction between the belt and the pulley depends upon the following factors:*

1. *The material of belt;*
2. *The material of pulley;*
3. *The slip of belt; and*
4. *The speed of belt.*

According to C.G. Barth, the coefficient of friction (μ) for oak tanned leather belts on cast iron pulley, at the point of slipping, is given by the following relation, i.e.

$$\mu = 0.54 - \{42.6/(152.6 + v)\}$$

Where, v = Speed of the belt in meters per minute.

2. Brief the term "crowning of pulley". (May/June 2014)

Soln. *Pulleys are provided. a -slight conical shapes (or) convex shapes in their rim's r surface in order to Prevent the belt from running off the pulley due centrifugal force. This is known as crowning, of pulley. Usually the crowning height t may be 1/96 of pulley face width.*

3. What are the materials used for belt-drive? (May/June 2013) (May/June 2016)

Soln. Leather,, cotton fabrics ,rubber, animal's hair, silk, rayon, woolenetc

4. What do you mean by Galling of roller chains? (Nov/Dec 2010) (May/june2012) (Nov/Dec 2010)

Soln. *The pin pressure faces have suffered from severe galling where the surfaces have articulated and fused together.*

5. When do you prefer chain drive to a belt or rope drive? (May/Jun 2016

Soln.

Chain drives are preferred for velocity ratio less than 10, chain velocities upto 25 m/s, and for power ratings up to 125KW

DESIGN OF TRANSMISSION SYSTEMS FOR FLEXIBLE ELEMENTS (PART –A)
6. What are the five parts of roller chain? (April/May 2010)
Soln. *The five parts of roller chain are* *1. Pin link 2. Pin 3. Bushing 4. Roller and 5. plates*
7. Sketch and name the different types of compound wire ropes. (April/May 2010)
Soln. *They are two type namely* *a) Fiber ropes* *b) Wire ropes.(a) Based on nup4ber of strands and wires..* *i) 6x7 ii) 6 x 19 iii) 6 x 37 iv) 8 x 19 ropes.* *(b) Based on the direction of wire I a with respect to strands in twisting.* *i) Cross -lay ropes.* *ii) Parallel-lay ropes.* *iii) Compound laid ropes.*
8. How are the ends of flat-belt joined? (April/May 2011)
Soln. (i) Cemented joints (ii) Laced joints (iii) Crest joints. (iv) Hinged joints.
9. What is chordal action (Polygonal action) in chain drives? (Nov/Dec 2012)
Soln. *When chain passes over the sprocket, it moves as a series of chords instead of a continuous arc as in the case of a belt drive. It results in varying speed of the chain drive. This phenomenon is known as* chordal action 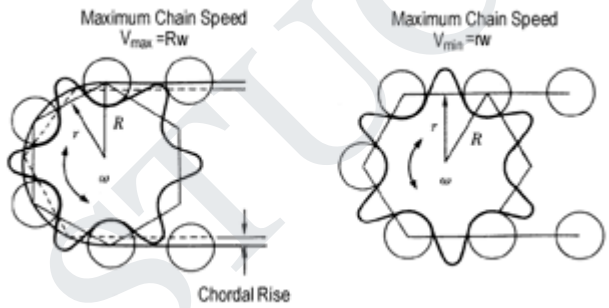
10. Give an expression for ratio of tensions in a flat belt drive. (Apr/May2011)
Soln. Tension ratio, $\frac{T_1}{T_2} = e^{\mu\alpha}$ ...[neglecting centrifugal tension] $\frac{T_1 - mv^2}{T_2 - mv^2} = e^{\mu\alpha}$ ....[considering centrifugal tension]

UNIT -II

SPUR GEARS AND PARALLEL AXIS HELICAL GEARS

Spur Gears

(i). Classification of based on the relative position of their shaft axes:

(i) Parallel shafts

Examples: Spur gears, helical gears, rack and pinion, herringbone gears and internal gears.

(ii) Intersecting shafts

Examples: Bevel gears and spiral gears.

(iii) Non-parallel, non-intersecting shafts

Examples: Worm, hypoid and spiral gears.

2. Classification based on the relative motion of the shafts:

(i) Row gears: In this type, the motion of the shafts relative to each other is fixed.

(ii) Planetary and differential gears

3. Classification based on peripheral speed (v):

(i) Low velocity gears $v < 3$ m / s

(ii) Medium velocity gears $v = 3$ m / s

(iii) High velocity gears $v > 15$ m / s

4. Classification based on the position of teeth on the wheel:

(i) Straight gears (ii) Helical gears

(iii) Herringbone gears

(iv) Curved teeth gears

5. Classification based on the type of gearing:

(i) External gearing

(ii) Internal gearing

(iii) Rack and pinion

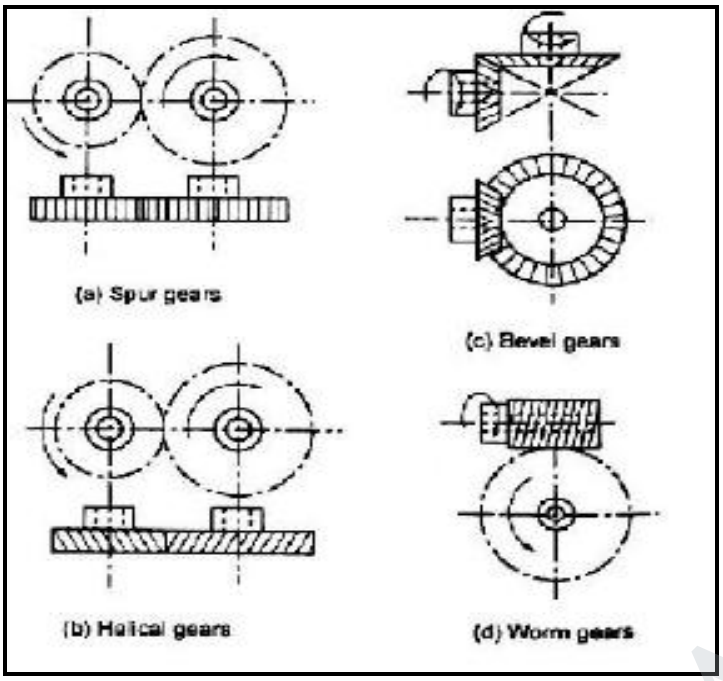

SPURGEARS

Terminology Used in Gears (Gear Nomenclature)

The terminology of gear teeth is illustrated in Fig. The various terms used in the study of gears have been explained below

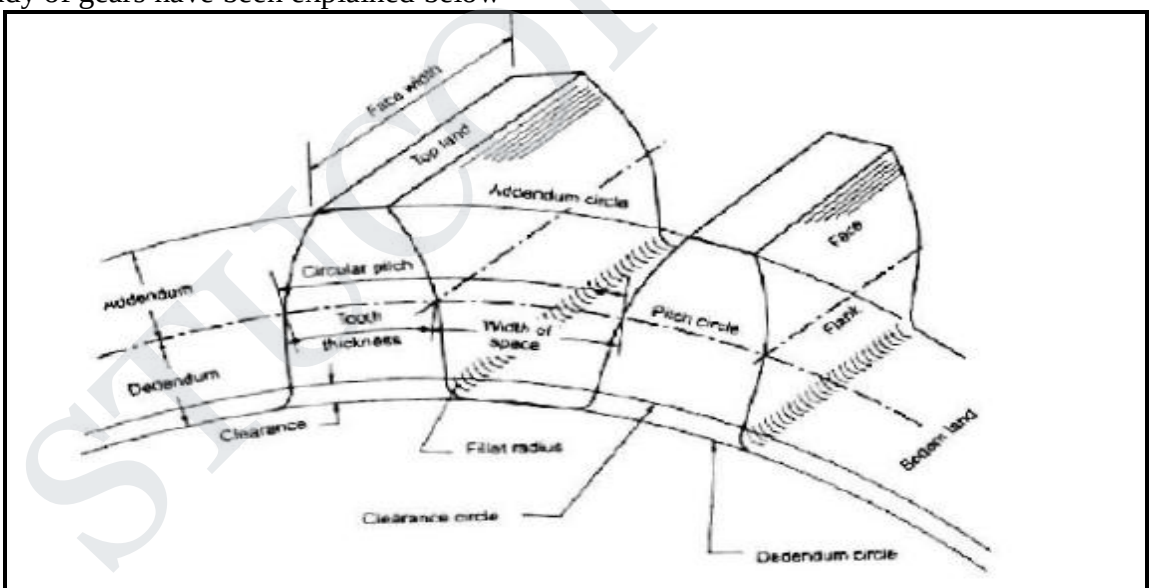

Fig. 5.2. Gear nomenclature

(a) Circular pitch (Pc):

It is the distance measured along the circumference of the pitch circle from a point on one tooth to the corresponding point on the adjacent tooth.

$$\textbf{Circular pitch, } P_c = \frac{\pi D}{z}$$

Where D = Diameter of pitch circle, and
z = Number of teeth on the wheel

(b) Diametral pitch (Pd):
It is the ratio of number of teeth to the pitch circle diameter.

$$\textbf{Diametral pitch, } P_d = \frac{z}{D} = \frac{\pi}{P_C}$$

(c) Module pitch (m):
It is the ratio of the pitch circle diameter to the number of teeth.

$$\textbf{Module, } m = \frac{D}{Z}$$

Velocity ratio: It is the ratio of speed of driving gear to the speed of the driven gear.

$$i = \frac{N_A}{N_B} = \frac{Z_B}{Z_A}$$

Where N_A and N_B= Speeds of driver and driven respectively, and,
Z_A and Z_B = Number of teeth on driver and driven respectively,

Contact ratio: The ratio of the length of arc of contact to the circular pitch is known as Contact ratio. The value gives the number of pairs of teeth in contact.

The properties of the various materials used for the gears are given in Table 5.3.

Gear materials and their properties (from data book, page no. 1.40)

FORCE ANALYSIS OF SPUR GEARS

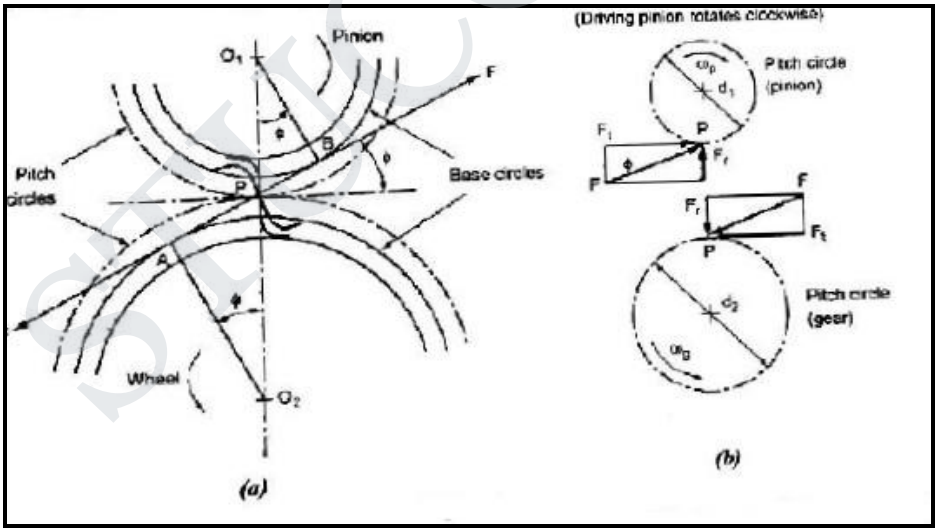

P=Power transmitted by gears in watts,
M_t = Torque transmitted by gears in N-m,
N_1 &N_2 =Speeds of pinion and gear respectively in r.p.m.,
d_1&d_2 = Pitch circle diameters of pinion and wheel respectively in m, and
ϕ = Pressure angle.

The torque transmitted by the gears is given by

$$M_t = \frac{60 \times p}{2\pi N}$$

The tangential component F_t acts at the pitch circle radius.

$$M_t = F_t \times \frac{d}{2}$$

Or

$$F_t = \frac{2 . M_t}{d}$$

Radial component, $F_r = F_t . \tan\phi$

Therefore resultant force, $F = \sqrt{F_t^2 + F_r^2}$

Or

$$F = \frac{F_t}{\cos\phi}$$

Pitch line velocity (ν) is given by

$$\nu = \frac{\pi d N}{60} \ m/s$$

Then the transmitted power is calculated as

$$P = F_t \times \nu$$

DESIGN PROCEDURE FOR SPUR GEAR

1. **Selection of material:** Select a suitable pinion and gear materials.

2. **Calculation of z_1 and z_2 :**
   1. Assume z_1 =17
   2. $Z_2 = i*z_1$. Where **i** = gear ratio.

3. **Calculation of tangential load on tooth (Ft):**
   1. $F_t = \left(\frac{P * K_0}{V}\right)$

   P= Transmitter power in watts.
   V= Pitch line velocity in m/s.
   K_0 = Service factor (Assume 1.25).

4. **Calculation of initial dynamic load (Fd):**
   1. $F_d = \left(\frac{Ft}{C_v}\right)$..... **(From data book page no. 8.50)**

2. **C_v =** $\frac{6}{6+V}$ (Assume V=12)… **(From data book page no. 8.51)**

5. **Calculation of beam strength (Fs):**

Fs= π.m.b.[σ_b].y……. (From data book page no. 8.50)

m= Module in mm.
Fs = Strength of gear tooth.
[σ_b] = Allowable static stress.
b = Face width = **10m**
y = Form factor = **(0.154 –** $\frac{0.912}{z_1}$ **)for 20° involute.**

6. **Calculation of module (m):**
   1. **Fs ≥ F_d**

Calculate the value of **m** and select the nearest standard module value **from data book page no. 8.2**

7. **Calculation of b,d and v :**
   1. Face width **b = 10m.**
   2. Pitch circle diameter **d_1= z.m**
   3. Pitch line velocity **v =** $\left(\frac{\pi d_1 N_1}{60}\right)$

8. **Recalculation of beam strength (F_s):**
   1. **Fs= π.m.b.[σ_b].y**

9. **Calculation of accurate dynamic load (F_d):**

F_d = F_t+ $\frac{21v(bc+F_t)}{21v+\sqrt{bc+F_t}}$**……(From data book page no. 8.51)**

F_d= Total dynamic load on gear tooth.

F_t = Transmitted load.

c = Deformation factor ……**(From data book page no. 8.53)**

10. **Check for Beam Strength :**
    i. Compare F_d and F_s
    ii. If F_s ≥F_d .Design is safe and satisfactory.

11. **Calculation of maximum wear load (F_w) :**

F_w = d_1.b.Q.K_w……. (From data book page no. 8.51)

Q = Ratio factor = $\frac{2*i}{i+1}$

F_w= Maximum wear load.

K_w = $\frac{f^2 sin\emptyset}{1.4}\left(\frac{1}{E_p}+\frac{1}{E_g}\right)$… **(From data book page no. 8.51)**

f = (2.8 * BHN – 70) N/mm^2

d_1 = Pitch circle diameter.
B = Face width.

12. Check for wear:

i. Compare F_d and F_w

ii. If $F_w \geq F_d$ .Design is safe and satisfactory.

13. Calculation Basic Dimensions of:

Basic dimensions of spur gear …….. **(From data book page no. 8.22)**

DESIGN PROCEDURE FOR SPUR GEAR WITH GEAR LIFE

INDIAN STANDARD

1. **Selection of Material:** Select a suitable pinion and gear materials.
2. **Gear Ratio:**

$$i=\frac{N_1}{N_2}=\frac{Z_2}{Z_1}$$

3. **Gear Life:**

$N_{cycle} = N_{(in\ hrs)} \times 60 \times rpm$

$N_{cycle} = N_{(in\ mins)} \times rpm$

4. **Calculation of Initial design Torque**: $[M_t]$

$[M_t] = M_t \times K \times K_d$….[**PSG data book page no:8.15**]

$K \times K_d = 1.3$

M_t =Transmitted torque = $\frac{60 * p}{2\pi N}$

5. **Calculation of $[E_{eq}]$, $[\sigma_b]$, $[\sigma_c]$:**

a. $[E_{eq}]$ = Equivalent young's modulus….[**PSG data book page no:8.14**]

b. $[\sigma_b] = (\frac{1.4\ K_{bl}}{nK_\sigma})\sigma_{-1}$ …….[**PSG data book page no:8.18**]

K_{bl}= Life factor for bending…….[**PSG data book page no:8.20**]

K_σ = Stress concentration factor …….[**PSG data book page no:8.19**]

n = Factor of safety……[**PSG data book page no:8.19**]

σ_{-1} = Endurance limit stress……..[**PSG data book page no: 8.19]**

c. $[\sigma_c] = C_B.\ HB.\ K_{cl}$……. [**PSG data book page no: 8.16]**

$C_B = \frac{C_B}{10}$ ……. [**PSG data book page no: 8.16]**

H_B = Brinell hardness number….. [PS**G data book page no: 8.16]**

K_{cl}= Life factor for surface strength….[**PSG data book page no: 8.17]**

6. **Calculation of center distance (a):**

$$a \geq (i+1)\sqrt[3]{\left[\frac{0.74}{[\sigma_c]}\right]^2 \times \frac{E_{eq}[M_t]}{i.\varphi}}$$ ….[**PSG data book page no: 8.13]**

Assume φ=.3

7. **Selection of number of teeth:**

Assume $\mathbf{Z_1 = 17}$

$\mathbf{Z_2 = i \times Z_1}$

8. **Calculation of module:**

$$m = \frac{2a}{(z1+z2)}$$ …….**[PSG data book page no: 8.22]**

Standard transverse module in **PSG data book pg no: 8.2**

9. **Revision of center distance:**

$$a = \frac{m(Z1+Z2)}{2}$$ ……. [PSG **data book page no: 8.22]**

10. **Calculation of b,** d, v *and* φ:

Face width, $\mathbf{b = \varphi.a}$

pitch circle dia, $\mathbf{d_1} = m.Z1$

Pitch line velocity, $v = \frac{\pi \times d_1 \times N_1}{60}$

$$\varphi_p = \frac{b}{d_1}$$

11. **Selectionofqualityofgears:**

Quality of gears can be selected from the **PSG data book page number 8.3**

12. **Revision of design Torque $[M_t]$:**

$$[M_t] = M_t \times K \times K_d$$

K= Load concentration factor ……**[PSG data book page no: 8.15]**

K_d= Dynamic Load Factor……..**[PSG data book page no:8.16]**

13. **Check for Bending:**

$$\sigma_b = \frac{i \pm 1}{a.m.b.Y}[M_t]$$ .....**[PSG data book page no:8.13A]**

Yv from **PSG data book page no: 8.18** for value of Z_{v1}

$\sigma_b < [\sigma_b]$ – Design is safe and satisfactory.

14. **Check for wear strength:**

$$\sigma_c = 0.74\frac{i \pm 1}{a}\sqrt{\frac{i \pm 1}{ib}E_{eq}[M_t]}$$ ……..**[PSG data book page no:8.13]**

$\sigma_c < [\sigma_c]$ - Design is safe and satisfactory.

15.**Basic Dimensions:**

For Basic Dimensions of spur gear ..**[PSG data book page no:8.22]**

Helical Gears

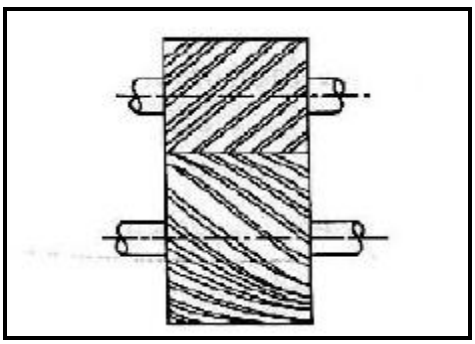

KINEMATICS AND NOMENCLATURE OF HELICAL GEARS

Let β = Helix angle,
p_t = Transverse cirular pitch,
p_n = Normal circular pitch,
p_a = Axial pitch,
p_d = Diametral pitch,
α_t and α_n = Transvers and normal pressure angles respectively,
m_t and m_n = Transverse and normal modulus respectively,
z_1 amd z_2 = Number of teeth on pinion and gear respectively,
d_1 and d_2 = pitch circle diameters of pinion and gear respectively,
N_1 and N_2 = Speeds of pinion and gear respectively,and
a = Centre to centre distance between pinion and gear.

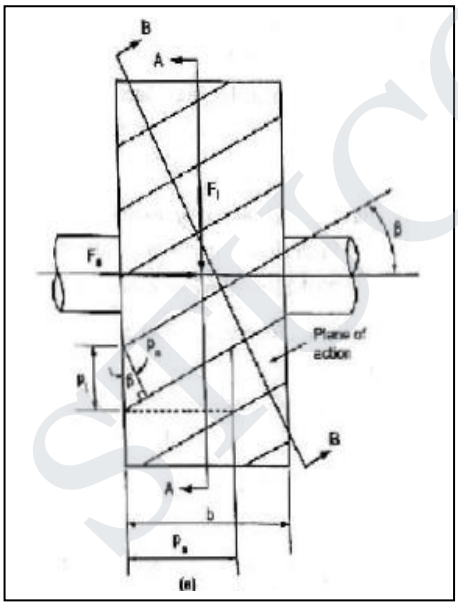

(a) Gear

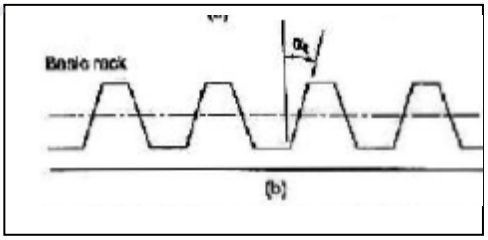

(b) Section AA (transverse plane),

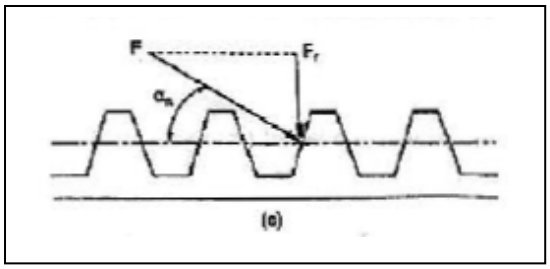

(c) Section BB (normal plane).

The various terms used in the study of helical gears have been explained below.

TOOTH PROPORTIONS FOR HELICAL GEARS

There are no standard proportions for helical gears. The proportions recommended by American Gear Manufacturer's Association (AGMA) are as follows:

- Normal Pressure angle **(α_n) = 158 to 258**

- Helix angle **(β) = 88 to 258, for helical = 258 to 408 for herringbone**
- Addendum, maximum = **0.8 m_n**
- Dedendum, minimum = **m_n**
- Tooth depth = **2.25 m_n**
- Minimum clearance = **0.2 m_n**
- Thickness of tooth = **1.5708 m_n**

BASIC DIMENSIONS OF HELICAL AND HERRINGBONE GEARS

All the basic dimension of helical and herringbone gears are listed in table 6.1(from data book,page no. 8.22)

FORCE ANALYSIS ON HELCAL GEARS

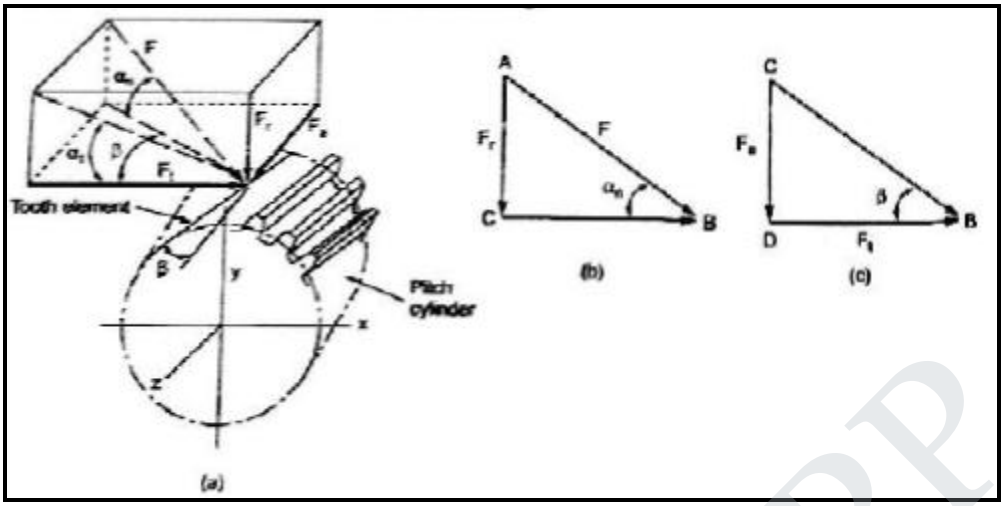

Tooth forces acting on helical gear

DESIGN PROCEDURE FOR HELICAL GEAR

1. Selection of material: Select a suitable pinion and gear materials.

2. Calculation of z_1 and z_2 :

1. Assume z_1 =17
2. $Z_2 = i*z_1$. Where **i**= gear ratio.

3. Calculation of tangential load on tooth (Ft):

3. $\mathbf{F_t} = \left(\frac{P*K_0}{V}\right)$

P= Transmitter power in watts.
V= Pitch line velocity in m/s.
K_0 = Service factor (Assume 1.25).

4. Calculation of initial dynamic load (Fd):

4. $\mathbf{F_d} = \left(\frac{Ft}{C_v}\right)$..... **(From data book page no. 8.50)**

5. $\mathbf{C_v} = \frac{6}{6+V}$ (Assume V=15)… **(From data book page no. 8.51)**

5. Calculation of beam strength (Fs):

Fs= π.m_n.b.[σ_b].y'…. **(From data book page no. 8.51)**

m_n= Normal module in mm.
Fs = Strength of gear tooth.
[σ_b] = Allowable static stress.
b = Face width = **10m_n.**
y' = Form factor = **(0.154 – $\frac{0.912}{z_{eq}}$)for 20° involute.**

$$z_{eq} = \frac{z1}{\cos^3\beta}$$

6. Calculation of module (m_n):

1. **Fs ≥ F_d**

Calculate the value of $\mathbf{m_n}$ and select the nearest standard module value **from data book page no. 8.2**

7. Calculation of b,d and v :

1. Face width **b = 10m_n.**
2. Pitch circle diameter $\mathbf{d_1} = \left(\frac{m_n}{\cos\beta} \; x \; z_1\right)$ **… (From pg no. 8.22)**
3. Pitch line velocity **v** = $\left(\frac{\pi d_1 N_1}{60}\right)$

8. Recalculation of beam strength (F_s):

1. **Fs= π.m.b.[σ_b].y'**

9. Calculation of accurate dynamic load (F_d):

$$F_d = F_t + \frac{21v(bc.\cos^2\beta + F_t).\cos\beta}{21v + \sqrt{bc.\cos^2\beta + F_t}}$$ **..(From data book page no. 8.51)**

F_d= Total dynamic load on gear tooth.

F_t = Transmitted load.

c = Deformation factor ……**(From data book page no. 8.53)**

10. Check for Beam Strength :

i. Compare F_d and F_s

ii. If $F_s \geq F_d$ Design is safe and satisfactory.

11. Calculation of maximum wear load (F_w) :

$$F_w = \left(\frac{d1.b.Q.Kw.}{\cos^2\beta}\right)$$ ……. **(From data book page no. 8.51)**

Q = Ratio factor = $\left(\frac{2*i}{i+1}\right)$ ….. **(From data book page no. 8.51)**

F_w= Maximum wear load.

$$K_w = \frac{f^2 \sin\phi}{1.4}\left(\frac{1}{E_p} + \frac{1}{E_g}\right)$$ …..**(From data book page no. 8.51)**

f = (2.8 * BHN – 70) N/mm^2

d_1 = Pitch circle diameter.
B = Face width.

12. Check for wear:

i. Compare F_d and F_w

ii. If $F_w \geq F_d$ Design is safe and satisfactory.

13. Calculation Basic Dimensions of:

Basic dimensions of Helical gear …….. **(From data book page no. 8.22)**

DESIGN PROCEDURE FOR HELICAL GEAR WITH GEAR LIFE INDIAN STANDARD

1. **Selection of Material:** Select a suitable pinion and gear materials.
2. **Gear Ratio:**

$$i=\frac{N_1}{N_2}=\frac{Z_2}{Z_1}$$

3. **Gear Life:**

$N_{cycle} = N_{(in\ hrs)}$ x 60 x rpm

$N_{cycle} = N_{(in\ mins)}$ x rpm

4. **Calculation of Initial design Torque**: $[M_t]$

$[M_t] = M_t \times K \times K_d$….[**PSG data book page no:8.15**]

$K \times K_d = 1.3$

M_t =Transmitted torque = $\frac{60 * p}{2\pi N}$

5. **Calculation of $[E_{eq}]$, $[\sigma_b]$, $[\sigma_c]$:**
   - **d.** $[E_{eq}]$ = Equivalent young's modulus….[**PSG data book page no:8.14**]
   - **e.** $[\sigma_b] = (\frac{1.4\ K_{bl}}{n K_\sigma})\sigma_{-1}$ …….[**PSG data book page no:8.18**]

     K_{bl}= Life factor for bending…….[**PSG data book page no:8.20**]

     K_σ = Stress concentration factor …….[**PSG data book page no:8.19**]

     n = Factor of safety……[**PSG data book page no:8.19**]

     σ_{-1} = Endurance limit stress……..[**PSG data book page no: 8.19]**
   - **f.** $[\sigma_c] = C_B.\ H_B.\ K_{cl}$……. [**PSG data book page no: 8.16]**

     $C_B = \frac{C_B}{10}$ ……. [**PSG data book page no: 8.16]**

     H_B = Brinell hardness number….. [PS**G data book page no: 8.16]**

     K_{cl}= Life factor for surface strength….[**PSG data book page no: 8.17]**
6. **Calculation of center distance (a):**

$$a \geq (i+1)\sqrt[3]{[\frac{0.7}{[\sigma_c]}]^2 \times \frac{E_{eq}[M_t]}{i.\varphi}}$$ ….[**PSG data book page no: 8.13]**

Assume $\varphi = \frac{b}{a} = 0.3$

7. **Selection of number of teeth:**

Assume $\mathbf{Z_1 = 17}$

$\mathbf{Z_2 = i \times Z_1}$

8. **Calculation of module:**

$$\mathbf{m_n} = \frac{2a}{(z1+z2)} \times \cos\beta$$ .....[**PSG data book page no: 8.22]**

where β = helix angle.

Standard transverse module in **PSG data book pg no: 8.2**

9. **Calculation of center distance:**

$$\mathbf{a} = \frac{m_n(Z1+Z2)}{2*\cos\beta}$$ ..... [PSG **data book page no: 8.22]**

10. **Calculation of b,** d, v **and** φ:

Face width, $\mathbf{b = \varphi.a}$

pitch circle dia, $\mathbf{d_1} = \frac{m_n}{\cos\beta} * Z_1$ .....[PSG **data book page no: 8.21]**

Pitch line velocity, $v = \frac{\pi \times d_1 \times N_1}{60}$

$\varphi_p = \frac{b}{d_1}$

11. **Selectionofqualityofgears:**

Quality of gears can be selected from the **PSG data book page number 8.3**

12. **Revision of design Torque $[M_t]$:**

$\mathbf{[M_t] = M_t \times K \times K_d}$

K= Load concentration factor .....[**PSG data book page no: 8.15]**

K_d= Dynamic Load Factor.....[**PSG data book page no:8.16]**

13. **Check for Bending:**

$$\sigma_b = 0.7 \frac{i \pm 1}{a.m.b.y_v}[M_t]$$ .....**[PSG data book page no:8.13A]**

Yv from **PSG data book page no: 8.18** for value of Z_{v1}

$\sigma_b < [\sigma_b]$ – Design is safe and satisfactory.

14. **Check for wear strength:**

$$\sigma_c = 0.7 \left(\frac{i \pm 1}{a}\right)\sqrt{\frac{i \pm 1}{ib} E_{eq}[M_t]}$$ .....**[PSG data book page no:8.13]**

$\sigma_c < [\sigma_c]$ - Design is safe and satisfactory.

15. **Basic Dimensions:**

For Basic Dimensions of Helical gear ..[**PSG data book page no:8.22]**

UNIT– II: SPUR GEARS AND PARALLEL AXIS HELICAL GEARS (PART - A)
1. What is pressure angle? What is the effect of increase in pressure angle? (May/june 2014)
Soln. It is the angle between the common normal to two gear teeth at the point of contact and the common tangent at the pitch point. The standard pressure angle is $14\frac{1^{o}}{2}$ and 20^{0}
2. What condition must be satisfied in order that a pair of spur gears may have a constant velocity ratio? (May/june 2014)
Soln. Normally spur gear are the replaced by other gears like helical, double helical gears, bevel gears etc. Spur gear is normally used in lower speed due its ability of generating zero axial thrust. Now in order to maintain constant gear ratio or speed ratio, their centre of pitch circle must be from fixed and the pitch circle of two mating gears should meet at a point and the line of action should meet at pitch point in order to satisfy the law of gearing.
3. What are the profiles of spur gear (May/june 2016)
Soln. *1. Involute tooth profile* *2. Cycloidal tooth profile*
4. What are the main types of gear tooth failure? (May/june2013) (May/june2012)
Soln. *The two modes of gear tooth failures are:* *1. Tooth breakage (due to static and dynamic loads),and* *2. Tooth wear (or) surface deterioration)* *(a). abrasion,* *(b). pitting, and* *(c). scoring or seizure*
5. Define the various pitch in a helical gear. (May/June 2012)
Soln. *1. Transverse circular pitch (p_t):the distance between corresponding points on adjacent teeth measured in a plane perpendicular to the shaft axis is known as Transverse circular pitch* *2. normal circular pitch (p_n): the distance between corresponding points on adjacent teeth measured in a plane perpendicular to helix is known as normal circular pitch* *3. Axial pitch (p_a): the distance between corresponding points on adjacent teeth measured in a plane parallel to the shaft axis is known as axial pitch.*

UNIT– II: SPUR GEARS AND PARALLEL AXIS HELICAL GEARS (PART - A)
6 .What is herringbone gear (April/May 2016)
Soln. Herringbone gears, also called double helical gears, are gear sets designed to transmit power through parallel or, less commonly, perpendicular axes. It do not have any grooves in between the gears
7. State the law of gearing or conditions of correct gearing (Nov/Dec 2010)
Soln. It states that for obtaining a constant velocity ratio, at any instant of teeth the common normal at each of contact should always pass through a pitch point, situated on the line joining the centre of rotation of the pair of mating parts.
8. What is tangential component of gear tooth force called useful component? (April/May 2010)
Soln. *Tangential component (F_t) : the tangential F_t is a useful component. Because it transmits power. Using the value of F_t the magnitudes of torque transmitted power can be determined.* *Transmitted load, = $W_t = F_t$* *Radial component (F_t): the radial component F_r is a separating force which is always directed towards the centre of the gear. F_r does no work. So it is not really a useful component. This force F_r causes bending of the shaft. The force $F_r$is also called as transverse force or bending force*
9. Compare the contact between mating teeth of spur and helical gears. (April/May 2010)
Soln. i) In spur gears the line of contact is parallel to the axis of rotation. The total length of contact line is equal to the face width. ii) In helical gears the line of contact is diagonal across the face of the tooth. The total length of contact line is greater than the face width. This lowers the unit loading & increases load carrying capacity.
10. why is a gear tooth subjected to dynamic loading (April/May 2015)
Soln. In addition to the static load due to power transmission, there are dynamic loads between the meshing teeth. The dynamic loads are due to the following reasons: (a). Inaccuracies of tooth spacing, b). Irregularities in tooth profiles, (c). Elasticity of parts, (d). Misalignment between bearings, (e). Deflection of teeth under load, and (f). Dynamic unbalance of rotating masses.

UNIT-III

BEVEL, WORM AND CROSS HELICAL GEARS

Bevel Gears

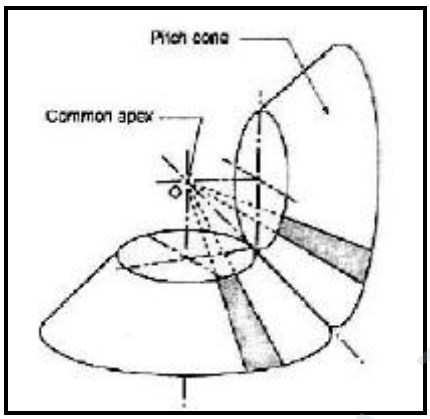

BEVEL GEAR NOMENCLATURE

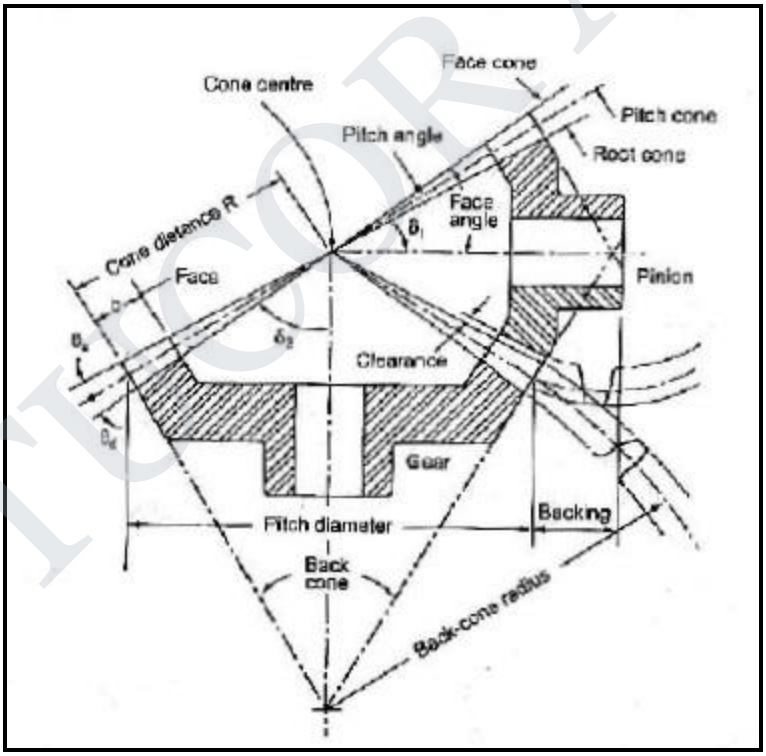

DESIGN PROCEDURE FOR BEVEL GEAR

1. **Selection of material:** Select a suitable pinion and gear materials.

2. **Calculation of z_1 and z_2 :**
   1. Assume z_1 =17

2. $Z_2 = i*z_1$. Where **i** = gear ratio.

3. **Calculate the pitch angles** (i,e., δ_1 and δ_2) and the virtual number of teeth (i.e., z_{v1} and z_{v2}) using the following relations.
   Pitch angles: **tan δ_2 = i and δ_1= 90~- δ_2,……(From data book page no. 8.39)**

$$z_{v1} = \frac{z_1}{\cos\delta_1} \text{ and } z_{v2} = \frac{z_2}{\cos\delta_2} \ldots\ldots \textbf{(From data book page no. 8.52)}$$

4. **Calculation of tangential load on tooth (Ft):**
   1. $F_t = \left(\frac{P*K_0}{V}\right)$

   P= Transmitter power in watts.
   V= Pitch line velocity in m/s.
   K_0 = Service factor (Assume 1.25).

5. **Calculation of initial dynamic load (Fd):**
   1. $F_d = \left(\frac{Ft}{C_v}\right)$…… **(From data book page no. 8.50)**
   2. $C_v = \frac{5.6}{5.6+\sqrt{V}}$ (Assume V=5)

6. **Calculation of beam strength (Fs):**

$$Fs = \pi.m_t.b.[\sigma_b].y'.\left(\frac{R-b}{R}\right)\ldots \textbf{(From data book page no. 8.52)}$$

   m_t= Transverse module in mm.
   Fs = Strength of gear tooth.
   $[\sigma_b]$ = Allowable static stress.
   b = Face width.
   y' = Form factor = **$\left(0.154 - \frac{0.912}{z_{v1}}\right)$for 20° involute….(Pg no .8.50)**

$$R = \sqrt{\left(\frac{d1}{2}\right)^2 + \left(\frac{d2}{2}\right)^2}$$

7. **Calculation of module (m_t):**
   1. **Fs $\geq F_d$**

   Calculate the value of **m_t** and select the nearest standard module value **from data book page no. 8.2**

8. **Calculation of b, d and v :**
   1. Face width **b = 10m_t.**
   2. Pitch circle diameter **d_1= m_t* z_1**
   3. Pitch line velocity **v** = $\left(\frac{\pi d_1 N_1}{60}\right)$

9. **Recalculation of beam strength (F_s):**
   1. **$Fs = \pi.m_t.b.[\sigma_b].y'.\left(\frac{R-b}{R}\right)$**

10. Calculation of accurate dynamic load (F_d):

$$F_d = F_t + \frac{21v(cb + F_t)}{21v + \sqrt{bc + F_t}}$$

F_d= Total dynamic load on gear tooth.

F_t = Transmitted load.

c = Deformation factor ……**(From data book page no. 8.53)**

11. Check for Beam Strength :

i. Compare $F_d$and F_s
ii. If $F_s \geq F_d$ .Design is safe and satisfactory.

12. Calculation of maximum wear load (F_w) :

$$F_w = \left(\frac{0.75.d_1.b.Q'.Kw}{\cos\delta 1}\right)$$

Q = Ratio factor = $\left(\frac{2*i}{i+1}\right)$ ….. **(From data book page no. 8.51)**

F_w= Maximum wear load.

$K_w = \frac{f^2 \sin\alpha}{1.4}\left(\frac{1}{E_p} + \frac{1}{E_g}\right)$…..**(From data book page no. 8.51)**

f = (2.8 * BHN – 70) N/mm^2

d_1 = Pitch circle diameter.
B = Face width.

13. Check for wear:

i. Compare F_d and F_w
ii. If $F_w \geq F_d$ .Design is safe and satisfactory.

14. Calculation Basic Dimensions of:

Basic dimensions of bevel gear …….. **(From data book page no. 8.38)**

DESIGN PROCEDURE FOR BEVEL GEAR WITH GEAR LIFE

INDIAN STANDARD

1. **Selection of Material:** Select a suitable pinion and gear materials.
2. **Gear Ratio:**

$$i = \frac{N_1}{N_2} = \frac{Z_2}{Z_1}$$

$i = \tan\delta_2$

$\delta_1 + \delta_2 = 90^0$

3. **Gear Life:**

$N_{cycle} = N_{(in\ hrs)} \times 60 \times rpm$

$N_{cycle} = N_{(in\ mins)} \times rpm$

4. **Calculation of Initial design Torque**: $[M_t]$

$[M_t] = M_t \times K \times K_d$

$K \times K_d = 1.3$

M_t =Transmitted torque = $\frac{60 * p}{2\pi N}$

5. **Calculation of [E_{eq}], [σ_b], [σ_c]:**
   - **g.** [E_{eq}] = Equivalent young's modulus….[**PSG data book page no:8.14**]
   - **h.** **[σ_b] =** $\left(\frac{1.4\,K_{bl}}{nK_\sigma}\right)\sigma_{-1}$ …….[**PSG data book page no:8.18**]

     K_{bl}= Life factor for bending…….[**PSG data book page no:8.20**]

     K_σ = Stress concentration factor …….[**PSG data book page no:8.19**]

     n = Factor of safety……..[**PSG data book page no:8.19**]

     σ_{-1} = Endurance limit stress……..[**PSG data book page no: 8.19]**
   - **i.** **[σ_c] = C_B. HB. K_{cl}**

     $C_B = \frac{C_B}{10}$ …… [**PSG data book page no: 8.16]**

     H_B = Brinell hardness number….. [PS**G data book page no: 8.16]**

     K_{cl}= Life factor for surface strength….[**PSG data book page no: 8.17]**

6. **Calculation of cone radius:**

$$R \geq \varphi_y\sqrt{i^2+1}\sqrt[3]{\left[\frac{0.72}{(\varphi_y-0.5)[\sigma_c]}\right]^2 \times \frac{E_{eq}[M_t]}{i}}$$ ….[**PSG data book page no: 8.13]**

Assume $\varphi_y = \frac{R}{b} = 3$

7. **Selection of number of teeth:**

   Assume $Z_1 = 17$

   $Z_2 = i \times Z_1$

   $Z_{v1} = \frac{Z_1}{\cos\delta_1}$ and $Z_{v2} = \frac{Z_2}{\cos\delta_2}$

8. **Transverse module:**

$$m_t = \frac{R}{0.5\ \sqrt{Z1^2+Z2^2}}$$ …….[**PSG data book page no: 8.38]**

Standard transverse module in **PSG data book pg no: 8. 2**

9. **Revision of cone distance:**

   R = 0.5 $m_t\sqrt{Z1^2+Z2^2}$ …..[**PSG data book page no: 8.38]**

10. **Calculation of b,** $m_{av}, d_{1av}, v, \varphi_y$:

    Face width, **b =** $\frac{R}{\varphi_y}$

    Average module, $m_{av} = m_t - \frac{b\sin\delta_1}{Z_1}$

    Average pitch circle dia, $d_{1av} = m_{av} \times Z_1$

Pitch line velocity, $v = \frac{\pi \times d_{1av} \times N_1}{60}$

$\varphi_y = \frac{b}{d_{1av}}$

11. ***Selection of quality of gears:***

Quality of gears can be selected from the **PSG data book page number 8.3**

12. Revision of design Torque [M_t]:

[M_t] = M_t × K × K_d

K= Load concentration factor ……[**PSG data book page no: 8.15]**

K_d= Dynamic Load Factor……..[**PSG data book page no:8.16]**

13. Check for Bending:

$\sigma_b = \frac{R\ \sqrt{i^2+1}\,[M_t]}{(R-0.5b)^2 \times b \times m_t \times Y_v}$……..[**PSG data book page no:8.13A]**

Yv from **PSG data book page no: 8.18** for value of Z_{v1}

σ_b< [σ_b] – Design is safe and satisfactory.

14. Check for wear strength:

$\sigma_c = \frac{0.72}{(R-0.5b)}\sqrt{\left[\frac{\sqrt{(i^2 \pm 1)^3}}{i \times b} \times E_{eq}\,[M_t]\right]}$ ……..[**PSG data book page no:8.13]**

$\sigma_c < [\sigma_c]$ - Design is safe and satisfactory.

15.**Basic Dimensions:**

For Basic Dimensions of bevel pinion and gear ..[**PSG data book page no:8.38]**

Worm Gears

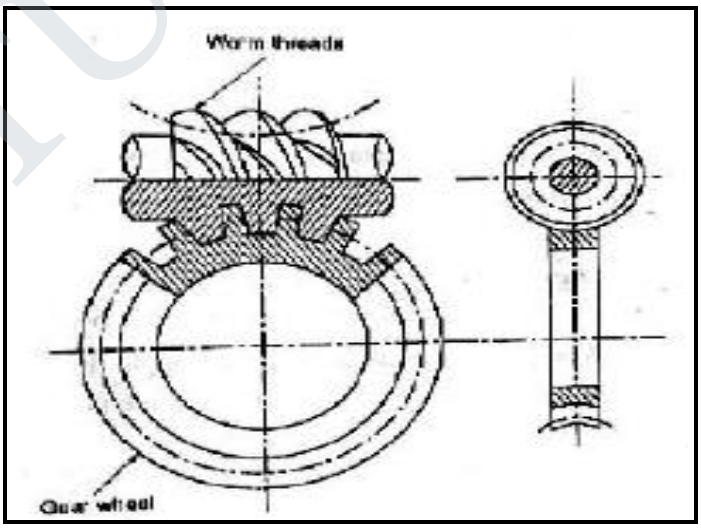

NOMENCLATURE OF WORM GEARS

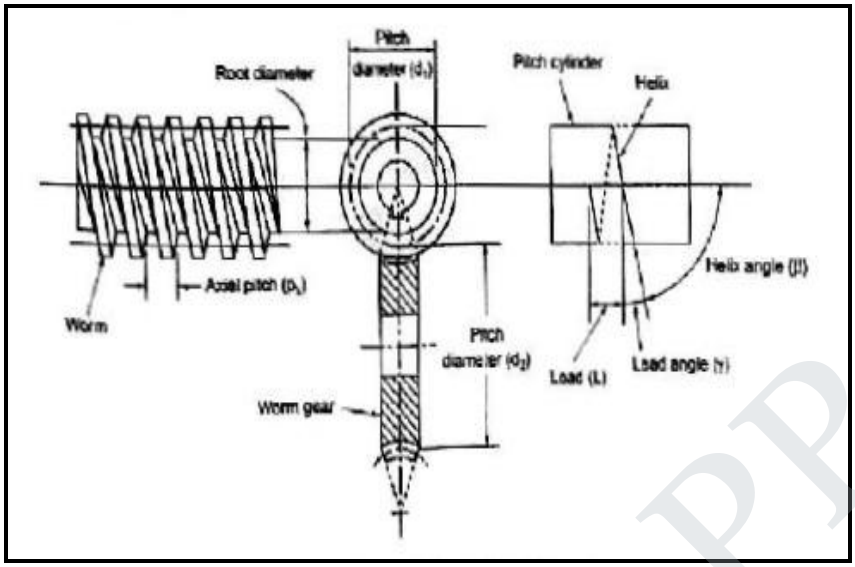

TOOTH PROPORTIONS OF WORM GEARS

S.No.	Particulars	Symbol	Unit	Worm	Worm Gear
1.	Addendum	h_a	mm	$h_{a1} = m_x$	$h_{a2} = m_x (2\cos\gamma - 1)$
2.	Dedendum	h_f	mm	$h_{f1} = (2.2 \cos\gamma - 1)\, m_x$	$h_{f2} = m_x (1 + 0.2 \cos\gamma)$
3.	Clearance	c	mm	$C = 0.2\, m_x \cos\gamma$	-
4.	Outside diameter	d_a	mm	$d_{a1} = d_1 + 2h_{a1} = m_x (q + 2)$	$d_{a2} = d_2 + 2h_{a2}$ $= m_x (z_2 + 4 \cos\gamma - z)$
5.	Root diameter	d_f	mm	$d_{f1} = d_1 - 2h_{f1}$ $= m_x (q + 2 - 4.4 \cos\gamma)$	$d_{f2} = d_2 - 2h_{f2}$ $= m_x (z_2 - 2 - 0.4 \cos\gamma)$

MATERIALS FOR WORM AND WORM WHEEL • 1

The following guidelines may be used while selecting the materials for Worm and worm wheel.

S. No.	Condition	Material	
		Worm	Worm Wheel
1.	Light loads and low speed	Steel	Cast iron
2.	Medium service conditions	Case hardened steel of BHN 250	Phosphor bronze
3.	High speeds, heavy loads with shock conditions	Hardened molybdenum steel or chrome vanadium steel	Phosphor bronze (chilled)

SELECTION OF NUMBER OF STARTS IN THE WORM (Z_1):

Table 8.4 shows the approximate efficiencies for the number of starts in the worm (from data book, page no. 8.46

LENGTH OF WORM (OR LEAD), L (from data book, page no. 8.48)
FACE WIDTH OF THE WHEEL (b) (from data book, page no. 8.48)

EFFICIENCY

The efficiency of the worm gearing considering only the gearing losses is given by

$$\eta = \frac{\tan\alpha}{\tan(\gamma + \rho)}$$

Where ρ = Angle of friction = $\tan^{-1}(\mu)$, and
μ = Coefficient of friction,

The efficiency of the worm gearing taking into account all the losses is given by

$$\eta = (0.95 - 0.96)\frac{\tan\gamma}{\tan(\gamma + \rho)}$$

THERMAL RATING OF WORM GEARING

Where $H_g = (1 - \eta)$ x Input power,
$H_d = K_t \times A \times (t_o - t_a)$
K_t = Heat transfer coefficient of housing walls ($W/m^2 8C$),
A = Effective surface area of the housing (m^2),
t_o = Temperature of lubricating oil (8C), and
t_a = Temperature of the atmospheric air (8C).

Therefore **$(1 - \eta)$ x Input power = K_t x A x $(t_o - t_a)$**

DESIGN PROCEDURE FOR WORM AND WORM WHEEL

1. Selection of material: Select a suitable material for worm and worm wheel.

2. Calculation of z_1 and z_2 :

1. Depending upon the efficiency requirement, select the no. of starts (Z_1) in the worm …..**(From data book page no. 8.46)**
2. $Z_2 = i*z_1$. Where **i** = gear ratio.

3. Calculate the diameter factor (q) and lead angle (γ):

Diameter factor, **q** $= \frac{d1}{m_x}$. If not assume **q = 11**

Lead angle, $\gamma = tan^{-1}(\frac{z1}{q})$

4. Calculation of tangential load on wheel (Ft):

1. $F_t = \left(\frac{P*K_0}{V}\right)$

P= Transmitter power in watts.
V= Pitch line velocity in m/s.
K_0 = Service factor (Assume 1.25).

5. **Calculation of initial dynamic load (Fd):**
   1. $F_d = \left(\frac{Ft}{C_v}\right)$…… **(From data book page no. 8.50)**
   2. $C_v = \frac{6}{6+V}$ (Assume V=5)… **(From data book page no. 8.51)**
6. **Calculation of beam strength (Fs):**

   $Fs = \pi.m_x.b.[\sigma_b].y'$ …. **(From data book page no. 8.52)**

   m_x= Axial module in mm.
   Fs = Strength of gear tooth.
   $[\sigma_b]$ = Allowable static stress.
   b = Face width = **$8.25m_x$**
   y' = Form factor = $\left(\frac{Y}{\pi}\right)$ ….**(From data book page no. 8.52)**

7. **Calculation of axial module (m_x):**
   1. **$Fs \geq F_d$**

   Calculate the value of **m_x** and select the nearest standard module value**from data book page no. 8.2**
8. **Calculation of b, d and v :**
   1. Face width **b = $8.25m_x$.**
   2. Pitch circle diameter **$d_1 = m_x * z_2$**
   3. Pitch line velocity **v** = $\left(\frac{\pi d_1 N_1}{60}\right)$

9. **Recalculation of beam strength (F_s):**

   $Fs = \pi.m_x.b.[\sigma_b].y'$

10. **Calculation of accurate dynamic load (F_d):**

    $F_d = \left(\frac{Ft}{C_v}\right)$
    F_d= Total dynamic load on gear tooth.
    F_t = Transmitted load.

11. **Check for Beam Strength :**
    i. Compare $F_d$and F_s
    ii. If $F_s \geq F_d$ .Design is safe and satisfactory.

12. **Calculation of maximum wear load (F_w) :**

    $F_w = d_2 * b * K_w$……. (From data book page no. 8.52)
    F_w= Maximum wear load.
    $K_w = \left(\frac{Pressure\ angle}{10}\right)$…….(From data book page no. 8.54)
    b = Face width.

13. **Check for wear:**
    i. Compare $F_d$and F_w

ii. If $F_w \geq F_d$ .Design is safe and satisfactory.

14. Calculate the Efficiency:

i. $\eta = 0.96 \left(\frac{\tan\gamma}{\tan(\gamma+\rho)}\right)$…….(From data book page no. 8.49)

ii. $\mu = \tan\rho$

15. Calculation of power loss and area required:

i. Heat generated = Heat dissipated…….**(From data book page no. 8.52)**

$(1-\eta) * P = K_t*(\Delta t) *A$

(Δt) = Oil temp – Air temp

K_t= Heat transfer coeff.

16. Calculation Basic Dimensions:

Basic dimensions of worm and worm wheel ... **(From data book page no. 8.43)**

DESIGN PROCEDURE FOR WORM GEAR WITH GEAR LIFE

INDIAN STANDARD

1. **Selection of Material**: Select a suitable material for worm and worm wheel
2. **Calculation of Initial design Torque: $[M_t]$**

$[M_t] = M_t \times K \times K_d$ …….[**PSG data book page no:8.13**]

Assume $K \times K_d = 1$

M_t =Transmitted torque = $\frac{60 * p}{2\pi N}$

3. **Selection of Z_1 and Z_2:**

Z_1 value is selected for PSG **data book page no: 8.46.**

$Z_2 = i \times Z_1$.

4. **Selection of $[\sigma_b]$, $[\sigma_c]$:**

$[\sigma_b]$ from **PSG data book page no: 8.45**

$[\sigma_c]$ from **PSG data book page no: 8.45** for V_s

5. **Calculation of Centre Distance(a):**

$$a = \left[\left(\frac{Z_2}{q}\right) + 1\right]\sqrt[3]{\left[\frac{540}{\left(\frac{Z_2}{q}\right)[\sigma_c]}\right]^2 \frac{[M_t]}{10}}$$ …….[**PSG data book page no:8.44**]

Assume q= 11

6. **Calculation of axial module:**

$$m_a = \frac{2a}{q + Z_2}$$

Standard axial module in **PSG data book pg no: 8.2**

7. Revision of centre distance:

a = 0.5 $m_x\,(q + Z_2)$**.....[PSG data book page no: 8.43]**

8. Calculation of b, d, v, γ, v_3:

Pitch diameter: $d_1 = q \times m_x$

$d_2 = Z_2 \times m_x$

Pitch Velocity: $v_1 = \frac{\pi d_1 N_1}{60}$

$v_2 = \frac{\pi d_2 N_2}{60}$

Lead angle: $\gamma = tan^{-1}\left(\frac{Z_1}{q}\right)$

Assume q = 11

Sliding velocity $v_s = \frac{v_1}{cos\gamma}$

9. ***Recal*culation of design contact stress [σ_c]**

for sliding velocity v_s, Find[σ_c] from **PSG data book page no:8.45**

10. Revised [M_t]:

$[M_t] = M_t \times K \times K_d$

K= Load concentration factor .....**[PSG data book page no: 8.15]**

K_d= Dynamic Load Factor.....**[PSG data book page no:8.16]**

11. Check for Bending:

$\sigma_b = \frac{1.9[Mt]}{m_x^3 \times q \times Z_2 \times y_v}$**.....[PSG data book page no:8.44]**

Yv from **PSG data book page no: 8.52** for Z_v

$Z_v = \frac{Z}{cos^3\gamma}$

σ_b< [σ_b] – Design is safe and satisfactory.

12. Check for wear strength:

$\sigma_c = \frac{540}{\left(\frac{Z_2}{q}\right)}\sqrt{\left[\frac{\left(\frac{Z_2}{q}\right)+1}{a}\right]^3 \times \frac{[M_t]}{10}}$**.....[PSG data book page no:8.44]**

$\sigma_c < [\sigma_c]$ - Design is safe and satisfactory.

13. ***Check for* efficiency:**

$$\eta_{actual} = 0.95 \times \frac{tan\gamma}{\tan(\gamma + \rho)}$$

$$\rho = tan^{-1}(\mu)$$

14. Calculation of cooling area:

i. Heat generated = Heat dissipated…….**(PSG data book page no. 8.52)**

$(1-\eta) * P = K_t*(\Delta t) *A$

(Δt) = Oil temp – Air temp

K_t= Heat transfer coeff.

15. Basic Dimensions:

For Basic Dimensions of worm and worm wheel..[**PSG data book page no:8.43]**

UNIT– III: BEVEL, WORM AND CROSS HELICAL GEARS (PART - A)
1. Define the following terms: (a) cone distance (b) face angle. (May/ June 2014)
Soln. cone distance (R): it is the length of the pitch cone element mathematically, cone distance (R) $R = \frac{\text{pitch radius}}{\sin\delta}$ Tip or face angle: it is the angle subtended by the face of the tooth at the cone centre mathematically, Tip angle = pitch angle + addendum angle
2. What is virtual number of teeth in bevel gears? (May/ June 2014)
Soln. Soln. on order to simplify the design calculation and analysis, bevel gears are replaced equivalent spur gear. An imaginary spur gear considered in a plane perpendicular to the tooth at the larger end, is known as virtual or formative or equivalent spur gear.
3. Where do we use worm gears? (May/June 2013)
Soln. When we require to transmit power between nonparallel and non-intersecting shafts and very high Velocity ratio, of about 100, worm gears, can be employed. Also worm-gears provide self-locking Facility
4. What is helical angle of worm? (May/ Jun 2016)
Soln. **Helical angle** is the angle between any helix and an axial line on its right, circular cylinder or cone. Common applications are screws, helical gears, and worm gears. The helical angle is measured in degrees.
5. What are the main losses in the worm gear drive? (May/June 2012)
Soln. Merits 1) Used for very high velocity ratio of about 100 2) Smooth and noiseless operation. 3) Self-locking facility is available. Demerits 1) Low efficiency. 2) More heat will be produced and hence this drive can be operated inside an oil reservoir or extra Cooling fan is required in order to dissipate the heat from the drive. 3) Low power transmission.

UNIT– III: BEVEL, WORM AND CROSS HELICAL GEARS (PART - A)
6. How Bevel gears are manufactured? (May/Jun 2016)
Soln. Bevel gears are manufactured by following methods. They are a) Gear Milling b) Gear Hobbing c) Gear Shaping d) Bevel Gear Cutting
7. A pair of worm gears is designated as R2/54/10/5.Find the gear ratio (Nov/Dec 2012)
Soln. for example, R2/54/10/5 worm drive means, a right hand worm of star 2, meshes with a worm wheel of 54 teeth and of diameter quotient10, and with module 5mm
8. Why is phosphor bronze widely used for worm gear? (Apr/May2015)
Soln. The phosphor bronze is widely used for worms drive in order to reduce wear of the worms which will be excessive with cast iron or steel.
9. What are the forces acting on bevel gears?
Soln. the components of the resultant forces are: 1.tangential or useful component (F_t),and 2. Separating force (F_s): it is resolved into two components. They are (i). Axial force (F_a), and (ii). Radial force (F_r).
10. List out the main types of failure in worm gears. (Apr/May2011)
Soln. the different worm gear tooth failures are: (i). Seizure (ii).Pitting and rupture

UNIT-IV:

GEAR BOXES

Procedure for typical gear box design.

Step 1: **Selection of spindle speeds:**

1. **Determine the progression ratio**= $\varphi^{n-1} = \frac{N_{max}}{N_{min}}$

   (where n= number of speed)
2. **Find step ratio series and speed of gears (PSG Data book pg no. 7.20)**
3. **Write the structural formulae**

$Z_1 = p_1 (x_2) * p_2(x_2) * p_3(x_3) * p_4(x_4)$

$X_1 = 1,\ X_2=p_1,\ X_3= p_1p_2,\ X_4= p_1p_2\ p_3$

Preferred Structural Formulas			
6 speeds	2 x 3	(or) 3 x 2	
8 speeds	2 x 4	(or) 4 x 2	(or) 2 x 2 x 2
9 speeds	3 x 3		
12 speeds	3 x 2 x 2	(or) 2 x 2 x 3	(or) 2 x 3 x 2
16 speeds	4 x 2 x 2	(or) 2 x 4 x 2	(or) 2 x 2 x 4

Step 2:

Draw the ray diagram *or* speed diagram

Step 3:

Draw the kinematic diagram.

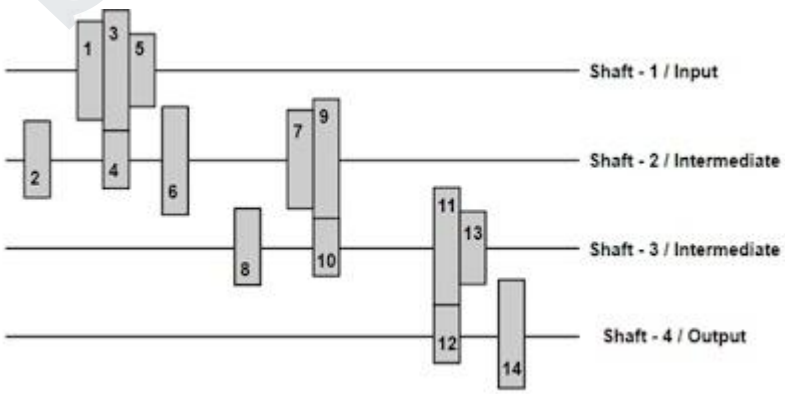

Step 4:

Calculate the number of teeth.

Step 5: Select the suitable materials

Materials constant PSG.1.15

Materials	Materials constant (M)
C45	30
15 Ni 2Cr 1 Mo 15	80
40 Ni 2Cr 1 Mo 28	100

Permissible shear stress(τ) N/mm^2

S.No	Shaft materials	(τ) N/mm^2
1.	C14 (as supplied)	25
2.	C45 (case hardened)	30
3.	Low carbon alloyed steel (case hardened)	40
4.	40 Ni 2Cr 1 Mo 28 (hardened and tempered)	55

Step 6: calculation of module

Calculate the torque for the gear which has the lowest speed using the relation,

$$T = \frac{PX60}{2\pi N}$$

Calculate the tangential force on the gear in terms of module using the relation

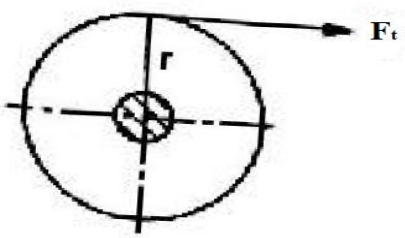

$$F_t = \frac{T}{r} = \frac{2T}{zm}$$

Gear

[T= F_tx r and r = $\frac{zm}{2}$]

Now calculate the module using the relation

$$m = \sqrt{(F_t/\varphi_m) * M}$$

φ_m = Ratio between the face width and module = $\frac{b}{m}$ = 10

M = Material constant

Standard module in **PSG data book pg no: 8.2**

Step 7:Calculation of centre distance in all stages:

Calculate the centre distance in each stage by using the relation

$$a = \left[\frac{Z_x + Z_y}{2}\right]m$$

Z_x and Z_y = Number of teeth on the gear pair in engagement in each stage

Step 8: calculation of face width: b=10*m

Step 9:calculation of distance between the bearings ie., length of shafts:

Calculate the distance between the bearings by using the following assumptions

ASSUMPTIONS:
Give 10mm clearance between the gear and the bearings on both sides.
Take the distance between the adjacent groups of gears as 20 mm.
Take the total length for two pairs gear group as 4b and for three pairs gear group as 7b as shown in figure.
Assume the width of the bearings as 25mm

Distance between the bearings is given by L=25+10+4b (or 7b) + 20 (or 4b) + 10 + 25

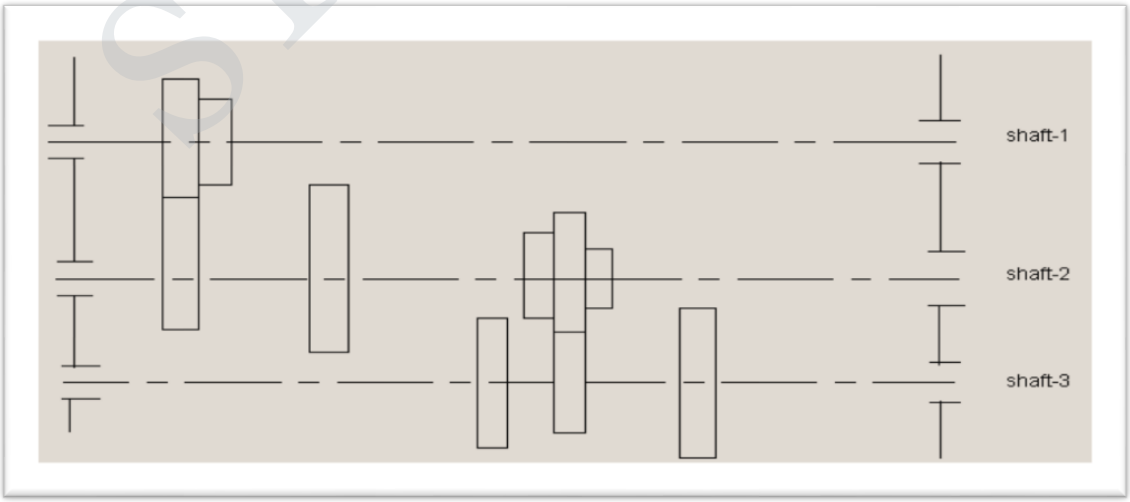

Step 10: ***Design of shafts:***

(i) ***Design of spindle****ie.,output shaft: Design the output shaft for maximum bending moment by considering the shaft as simply supported on bearings.*

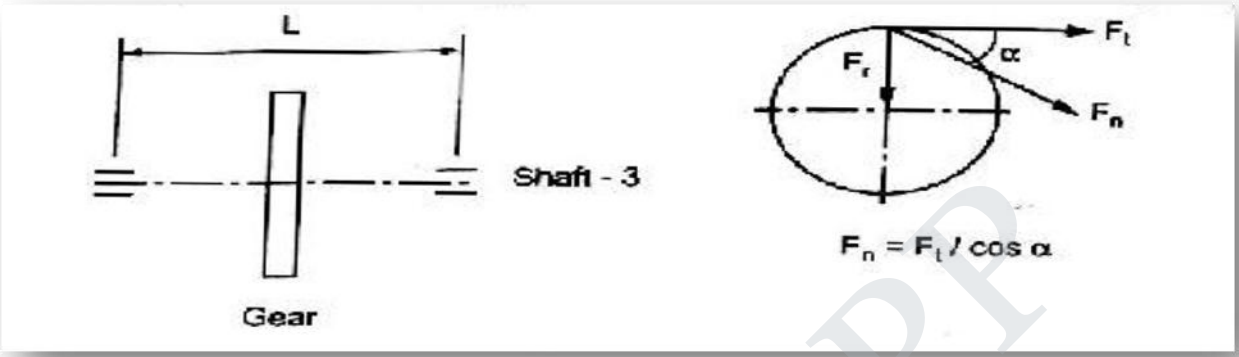

Step 11 ***Calculate the maximum bending moment due to normal load (F_n) using the relation***

$$M = \frac{F_n X L}{4}$$

Where F_n = Normal load on gear = $\frac{F_t}{\cos\alpha}$

Step 12 **Calculate the equivalent torque using the relation**

$$T_{equ} = \sqrt{M^2 + T^2}$$

Where T=Torque on the spindle = $\frac{PX60}{2\pi N_{low}}$

Step 13 **Calculate the diameter of the spindle using the relation**

$$d_s = \left[\frac{16 * T_{eq}}{\pi[\tau]}\right]^{\frac{1}{3}}$$

Where $[\tau]$ = Permissible shear stress,

T=Torque on the spindle = $\frac{PX60}{2\pi N}$

Step 14 ***Design of other shafts: Determine the diameter of the input and intermediate shafts using the relation.***

$$T = 0.2\, ds^3[\tau]$$

UNIT– IV: GEAR BOXES (PART - A)

1. What is step ratio? Name the series in which speeds of multispeed gear box are arranged. (May/June 2014)

Soln. Step ratio is the ratio of one speed of the shaft to its previous lower speed Since the spindle speeds are arranged in geometric progression, the ratios adjacent speeds (i.e., step ratios) are constant.

If Nr is;the maximum speed and N, is the minimum speed, then,

$\frac{Nr}{Nr-1}$= (Step ratio) = r-1

Basic series	*Step ratio(φ)*
R5	$\sqrt[5]{10} = 1.58$
R10	$\sqrt[10]{10} = 1.26$
R 20	$\sqrt[20]{10} = 1.12$
R 40	$\sqrt[40]{10} = 1.06$
R 80	$\sqrt[80]{10} = 1.03$

2. Sketch the kinematic layout of gears for 3 speeds between two shafts. (May/June 2014)

Soln.

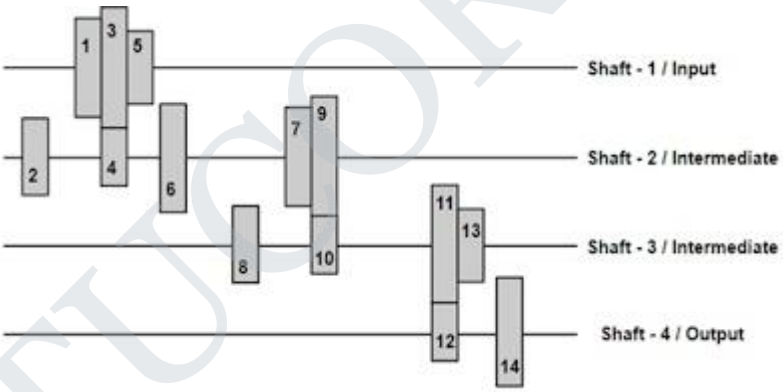

3. What are preferred numbers? (May/June 2013)

Soln. The series of preferred number is obtained by multiplying a step ratio with the first number to get the second number. The third number is obtained by multiplying a step ratio with the second number. similarly the procedure is continued until the series is competed.(from data book page no.7.20)

4. List four applications where constant mesh gear box is used. (Nov/Dec 2012)

Soln.

1. Automobile
2. Rolling mill
3. Machine tools
4. Crane

UNIT– IV: GEAR BOXES (PART - A)

5. Which type of gear is used in constant mesh gear box? Justify. ***(Nov/Dec 2012)***

Soln.
Helical gears are used in constant mesh gear boxes to provide quieter and smooth operation

6. What are the possible arrangements to achieve 12 speeds from a gear box?

(April/May2015)

Soln.

S.No	***Number Of Speeds***	***Preferred Structural Formula***
1.	*12speed*	***(i). 3(1) 2(3) 2(6)*** ***(ii). 2(1) 3(2) 2(6)*** ***(iii). 2(1) 2(2) 3(4)***

7. Define the term progression ratio? ***(April /May2015)***

Soln.
When the spindle speeds are arranged in geometric progression, the ratio between the two adjacent speeds is known as step ratio or progression ratio.

8. What are the points to be considered while designing a sliding mesh type of multi speed gear box? (April /May2010)

Soln.
i) The transmission ratio in a gear box is limited by ¼ <i< 2
ii) Speed ratio of any stage should not be greater than 8.

9. Where is multi-speed gear boxes employed? (Apr/May2011)

Soln.

(i) Automobiles

(ii) Machine tools and

(iii)Aeronautical.

10. Where multispeed gearbox is used? (May/Jun 2016)

Soln. Multi speed gearbox is used for speed adjustment at constant power level.
Heavy duty Industrial Multi-speed gearboxes are designed for continuous operation.

UNIT V

CAMS, CLUTCHES AND BRAKES

CAM TYPES

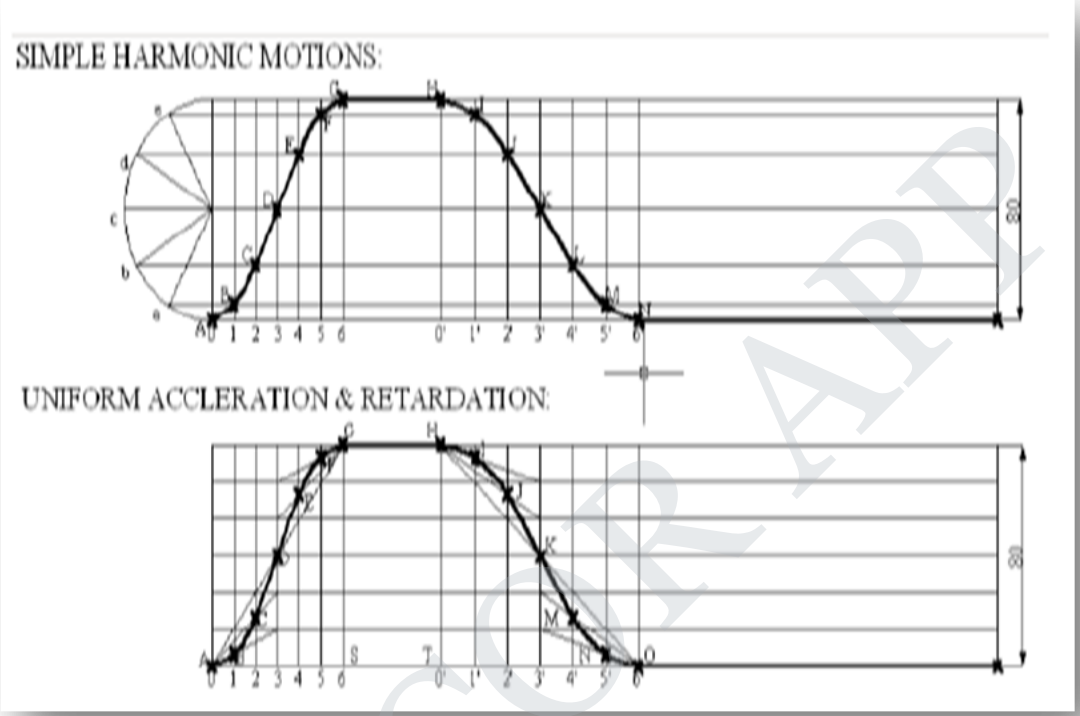

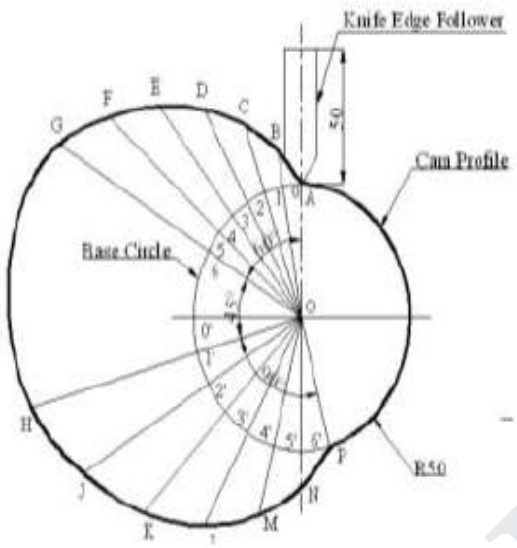

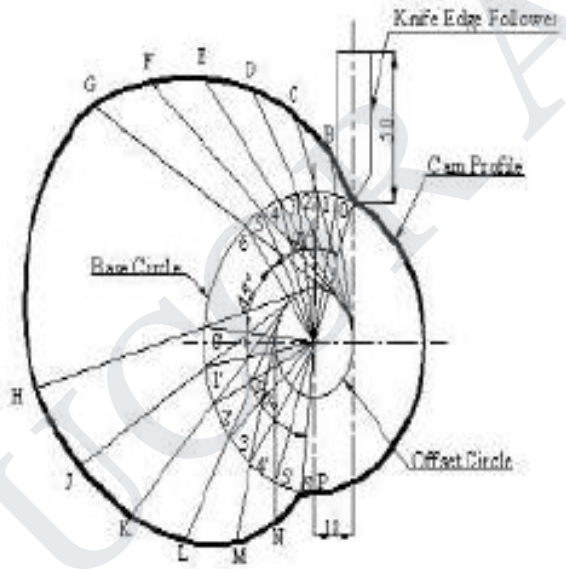

CLUTCHES

Design of a single plate clutch

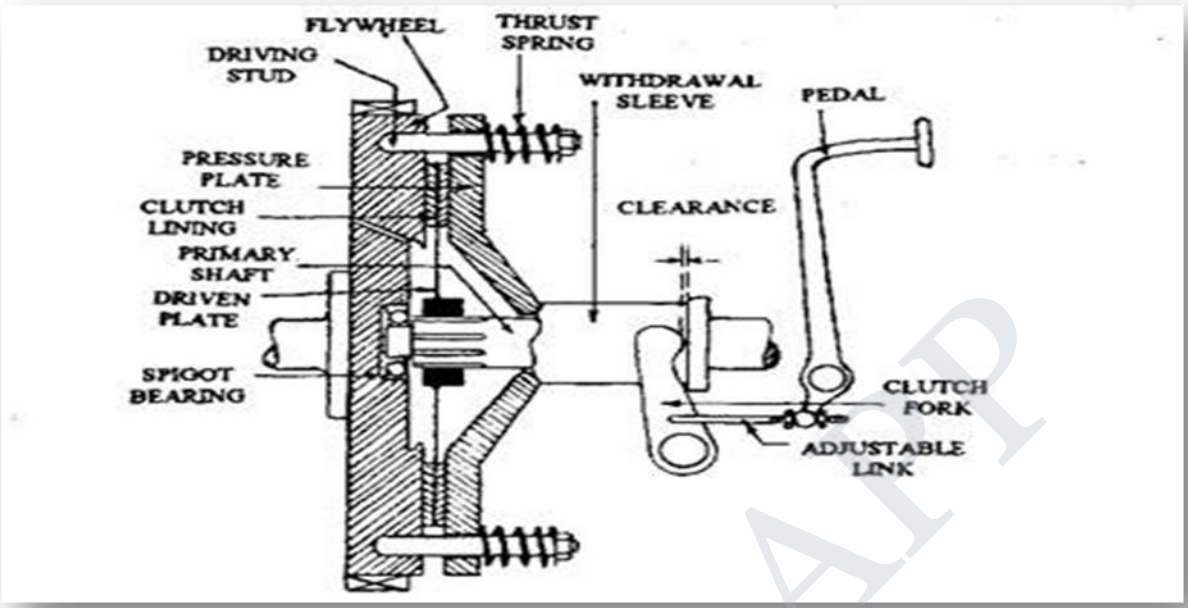

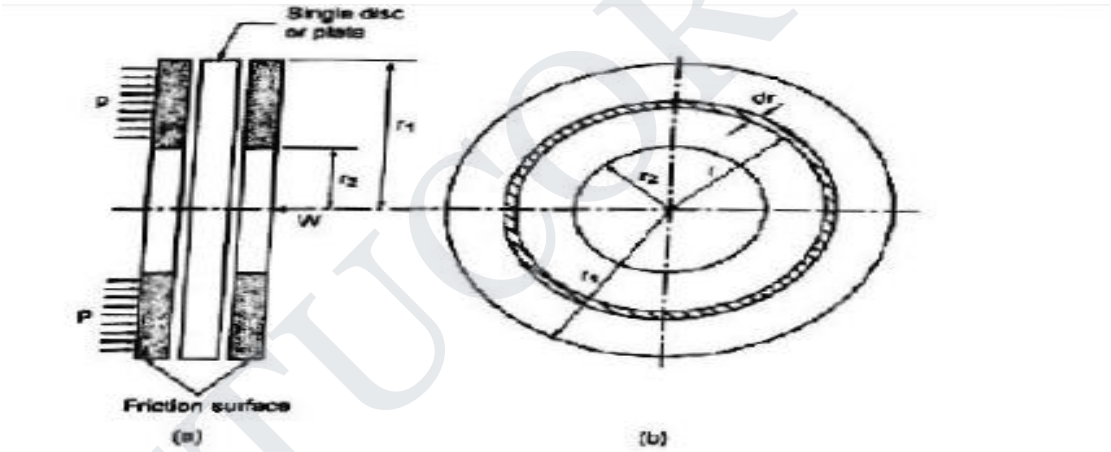

Fig. 10.3. Forces on a single disc or plate clutch

T= Torque transmitted by the clutch,

P= Intensity of axial pressure acting on contact surfaces,

r_1 = External radius of friction surface,

r_2 = Internal radius of friction surface.

Area of the elemental ring = $2\pi r.dr$

Normal or axial force on the ring, δW r.dr= $p \times 2\pi r.dr$

Friction torque acting on the ring, $t_r = 2\pi\mu p r^2.dr$

(i) Considering uniform pressure:

$P = \frac{W}{A}$

$A = \pi(r_1^2 - r_2^2)$

$T = \mu WR$

$R = \frac{2}{3}\left[\frac{r_1^3 - r_2^3}{r_1^2 - r_2^2}\right]$

(ii) Considering uniform wear

$P = \frac{c}{r}$

$P_1.r_1 = p_2.r_2 = c$

$$C = \frac{W}{2\pi(r_1 - r_2)}$$

$T = \mu WR$

$R = \left[\frac{r_1 + r_2}{2}\right]$

Design of a Multiplate clutch

(Torque transmitted on multiplate clutch)

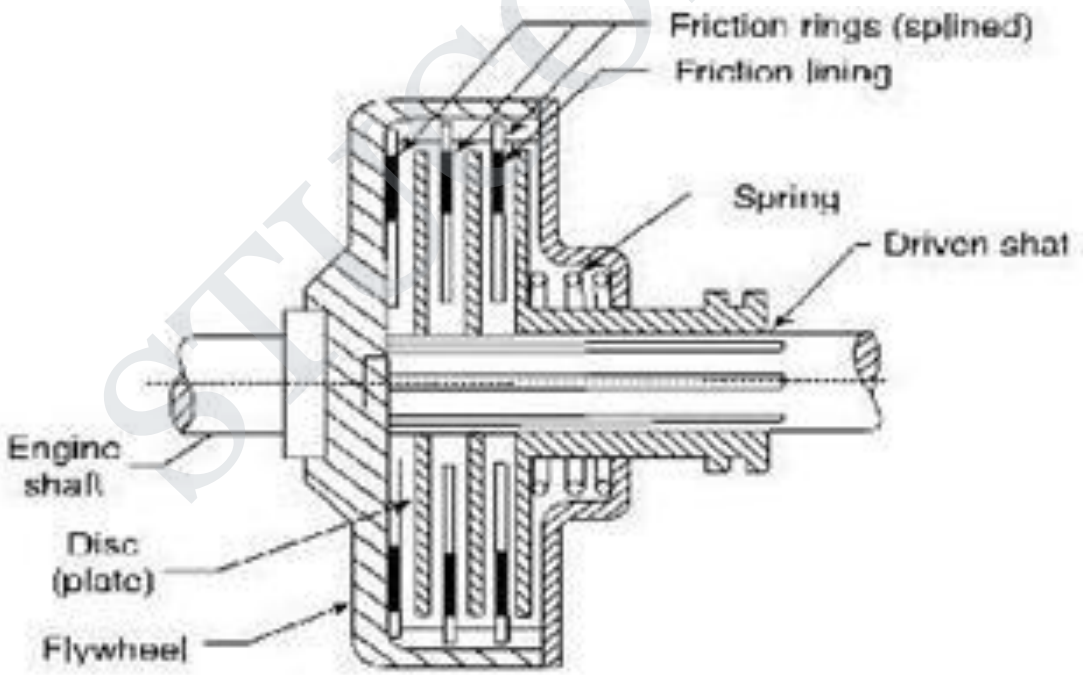

n_1 = Number of discs on the driving shaft, and

n_2 = Number of discs on the driven shaft.

Number of pair of contact surfaces,

$$n = n_1 + n_2 - 1$$

Total frictional torque on the clutch is given by

$T = n\mu WR$

$R = \frac{2}{3}\left[\frac{r_1^3 - r_2^3}{r_1^2 - r_2^2}\right]$ [For uniform pressure]

$R = \left[\frac{r_1 + r_2}{2}\right]$[[For uniform wear]

Design of a cone clutch

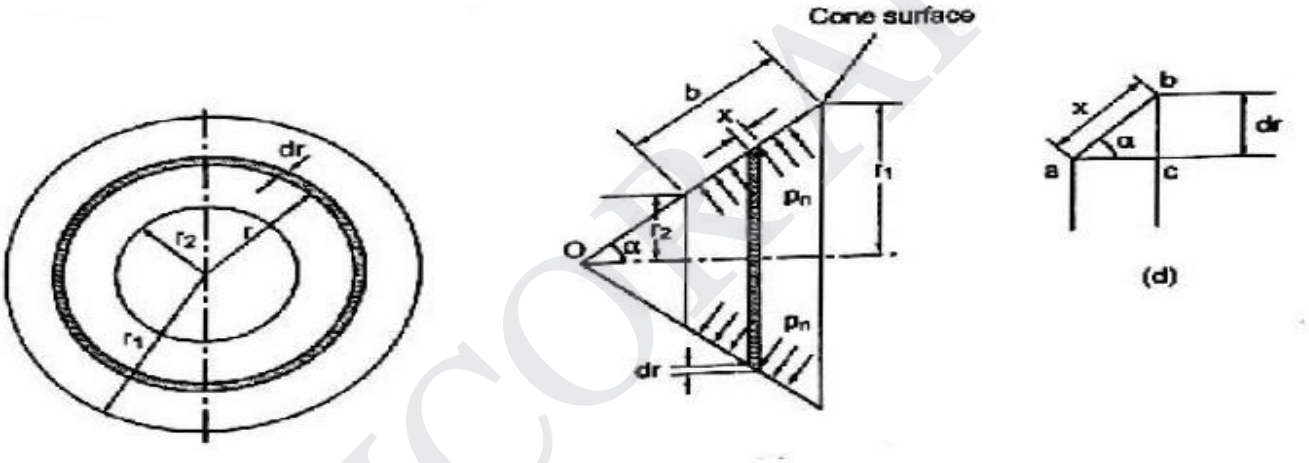

Torque transmitted on the cone clutch is given by

$$T = \mu WR \operatorname{cosec} \alpha$$

$$R = \frac{2}{3}\left[\frac{r_1^3 - r_2^3}{r_1^2 - r_2^2}\right] \text{ [For uniform pressure]}$$

$$R = \left[\frac{r_1 + r_2}{2}\right] \text{[For uniform wear]}$$

Axial force required at the engagement of clutch is given by

$$W_e = Wn(\sin\alpha + \mu\cos\alpha)$$

And axial force required at the disengagement of clutch is given by

$$W_e = Wn(\sin\alpha - \mu\cos\alpha)$$

BRAKE

SINGLE BLOCK OR SHOE BRAKE

The friction between the block and the brake drum causes the retarding of the drum. This type of Brake is commonly used on railway trains and tram cars.

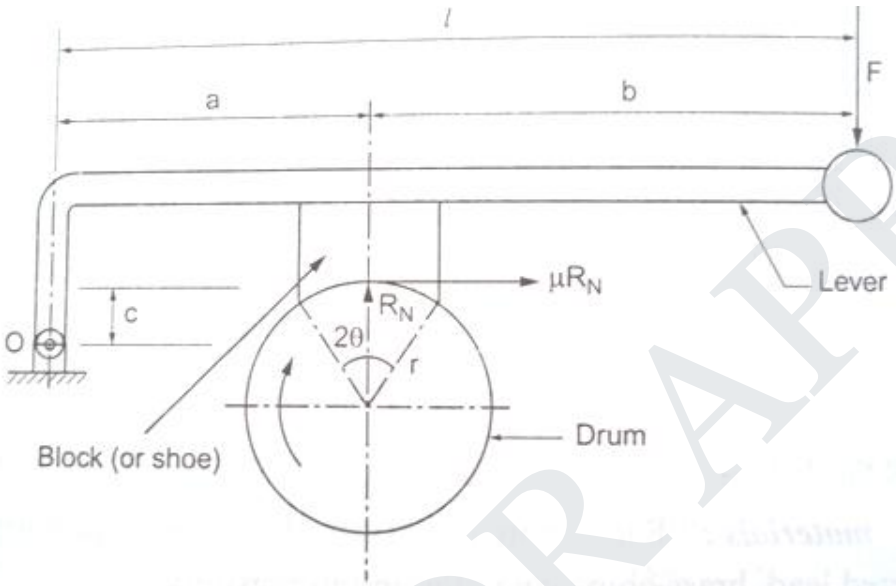

Fig. 11.2. Clockwise rotation of brake drum

The block is pressed against the drum by a force applied on one end of the lever. The other end of the lever is pivoted on a fixed fulcrum O.

Let r= Radius of the drum

R_N= Normal reaction of the block = $\frac{F.l}{a-\mu c}$ (clockwise)

$=\frac{F.l}{a+\mu c}$ (anti -clockwise)

F = Force applied at the lever end

μ= Coefficient of friction

μR_N= Frictional force

T_B = Braking torque = $\mu R_N.r = \mu.\frac{F.l.r}{a-\mu c}$ (clockwise)

$= \mu.\frac{F.l.r}{a+\mu c}$ (anti clockwise)

DOUBLE BLOCK OR DOUBLE SHOE BRAKE

If only one block is used for brakig, then there will be side thrust on the bearing of wheel shaft. This drawback can be removed by providing two blocks on the two sides of the drum, as shown in fig 11.7. This also doubles the braking torque. The double shoes on the drum reduce the unbalanced force on the shaft. The blocks or shoes are held on the drum by means of spring force.

Let S = Spring force required to set the blocks on the drum.

R = Radius of drum.

R_{N1} and μR_{N1} = Normal Reaction and the braking force on the left hand side shoe, and

R_{N2} and μR_{N2} = Normal Reaction and the bracking force on the right hand side shoe.

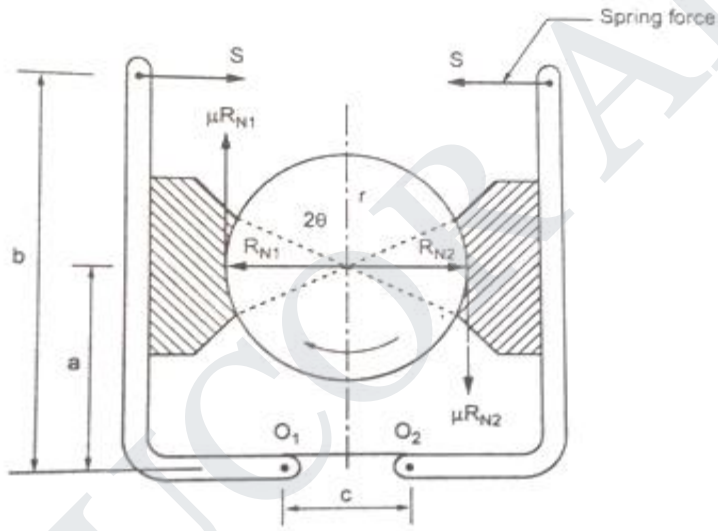

Fig. 11.7. Double shoe brake

DESIGN PROCEDURE FOR BLOCK BRAKE

Step 1: ***calculate the total energy absorbed by the brake***

$$E_T = \frac{1}{2} m v^2 + \frac{1}{2} I \omega^2 + WX$$

Step 2: ***calculate the torque capacity by using the relation***

$$T_B = \frac{60\, E_T}{\pi N_i t}$$

N_i = Initial speed of brake drum and

t = Time of application of brake

Step 3: ***calculate the initial braking power by using the relation***

$$P = \frac{2\pi N_t T_b}{60}$$

Step 4: ***Select the brake drum diameter***

Step 5: ***Select the suitable brake drum and shoe materials. For the chosen materials, consulting Table 11.1, the coefficient of friction is obtained.***

Table 11.1 properties of brake lining materials

Material	μ	Allowable pressure (p_{max}) Mpa	Max.Temp. (°C)
Wood on metal	0.25	0.48	65
Metal on metal	0.25	1.4	315
Leather on metal	0.35	0.17	65
Asbestos on metal in oil	0.40	0.34	260
Powdered metal lining on C.I in oil.	0.15	2.8	260

Step 6: ***Consulting table 11.2 , calculate the induced bearing pressure (p)***

Table 11.2 Limiting values of pv (from PSG 7.130)

Operating conditions	*Pv (mpa) (m/s)*
Continuous service, poor heat dissipation	*1.05*
Intermittent service, poor heat dissipation	*2.1*
Continuous service, good heat dissipation as in oil bath	*3.0*

Step 7: *calculate the projected area of the shoe by using the relation,* $A = \frac{R_N}{P}$

Step 8: *Finally calculate the breath and width of the shoe by using the relation projected area of the shoe,*

A= Breadth X Width

SIMPLE BAND BRAKES

The band or rope is wrapped round the cylindrical drum. When a force F is applied to the lever at B, the level turns about the fulcrum pin O and tightens the band on the drum and hence the brakes are applied. The friction between the band and the drum provides the braking torque.

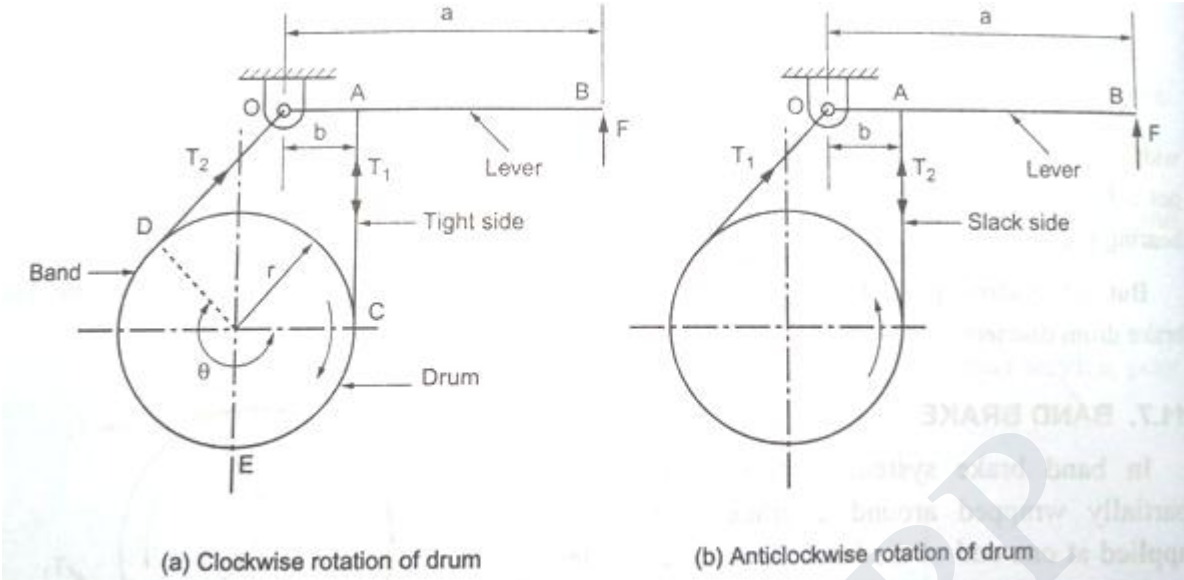

Fig. 11.11. Simple band brake

Let F = Force applied on the lever,

R = Radius of the drum,

T = Thickness of the band,

R_f = Effective radius of the band = $r+\frac{t}{2}$

a= Length of lever = OB

b = Distance between the fulcrum O and point A.

For clockwise rotation of drum

$$F.a = T_1 . b$$

For anticlockwise rotation of drum

$$F.a = T_2 . b$$

Braking torque $T_B = (T1- T2).r = \left[T_1 - \frac{T_1}{e^{\mu\theta}}\right] r = F \times \frac{a}{b} \left[1 - \frac{1}{e^{\mu\theta}}\right] r$

DIFFERENTIAL BAND BRAKE

In a differential band brake the ends of the band are joined to the lever DOB at points D and A. Point D is the fulcrum. It may be noted that for the band to tighten, the length OD must be greater than the length OA.

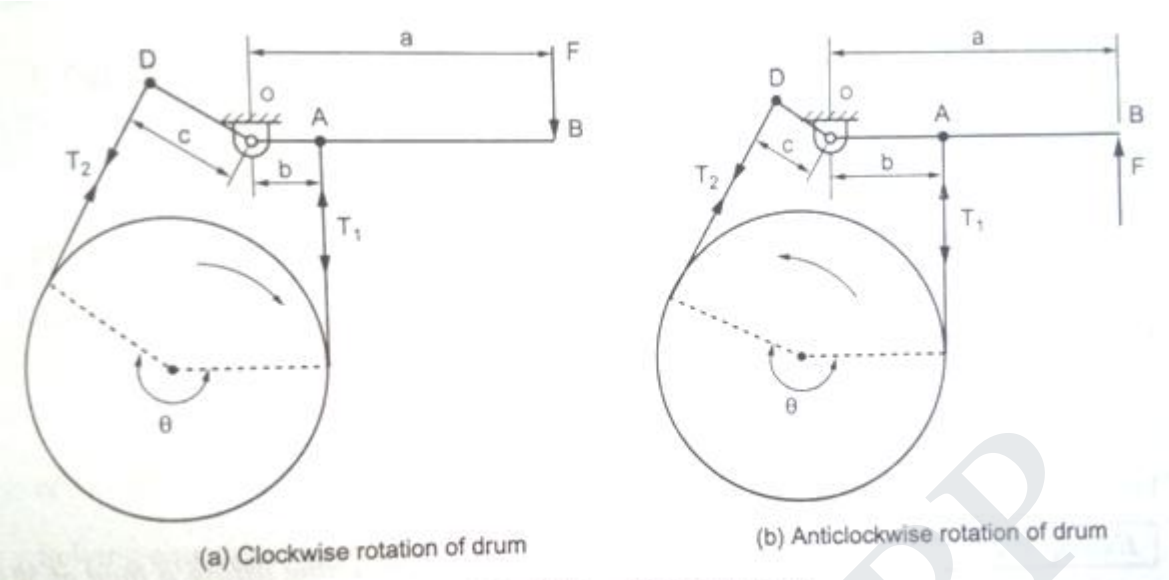

Fig. 11.14. Differential band brake

(i) Downward force on lever for clockwise rotation of drum:

This type of arrangement is shown in fig. 11.14(a). Taking moments about O, we get

$$F.\ a = T_2.\ c - T_1\ .\ b$$

Thus $T_2\ .\ c\ > T_1\ .\ b$ (or) $\frac{c}{b} > \frac{T_1}{T_2}$

Thus c>b for the system to work satisfactorily.

If $\frac{c}{b} = \frac{T_1}{T_2}$, the external applied force F = 0, which is the condition for self-locking.

(ii) Downward force on lever for anticlockwise rotation of drum:

Taking moments about O, we get

$$F\ .\ a = T_1\ .\ b - T_2\ .\ c$$

Thus $T_1\ .\ b > T_2\ .\ c$ (or) $\frac{T_1}{T_2} > \frac{c}{b}$

Condition for self-locking: If $T_1\ .\ b = T_2\ .\ c$, then external applied force F = 0

$$\frac{T_1}{T_2} = \frac{c}{b}$$

(iii)Upward froce on lever for anticlockwise rotation of drum:

This type of arrangement is shown in fig.11.14(b). Taking moments about O, we get

$$F\ .\ a = T_1\ .\ b - T_2\ .c$$

Thus $T_1\ b > T_2\ c$

$$\frac{T_1}{T_2} > \frac{c}{b}$$

(iv)Upwards froce on lever for clockwise rotatio of drum:

Taking Moment about O, we get,

$$F\ .\ a = T_2\ .\ c - T_1\ .\ b$$

Thus $T_2 . c > T_1 . b$ (or) $\frac{c}{b} > \frac{T_1}{T_2}$

Condition for self-locking:

If $\frac{T_1}{T_2} = \frac{c}{b}$; *then* $F = 0$

In this case, c must be less then b for proper braking.

DESIGN PROCEDURE FOR BAND BRAKES

Step 1:*Calculate the braking torque required from the data given.*

Step 2: *If not given, select the suitable diameter (D) of the brake drum, consulting table 11.3*

Table 11.3 Dimensions of brake drum (from PSG 7.98)

Power of the motor, KW	*Brake drum diameter, mm*	*Brake drum width, mm*
7.36	*160*	*50*
11.04	*200*	*65*
14.72	*250*	*80*
25.76	*320*	*100*
44.16	*400*	*125*
73.6	*500*	*160*
110.4	*630*	*200*
184	*800*	*250*

Step 3: ***Determine the tight and slack side tensions.***

Step 4: ***Calculate the thickness (t) of band: Take thickness of band as 0.005XDiameter of brake drum.***

Step 5*: calculate the band width (w)*

Induced tensile stress, $\sigma_t = \frac{T_1}{w.t}$

T_1 = Tight side tension in the band,

W = width of the band

t = Thickness of the band = 0.005 D

σ_t = permissible tensile stress = 50 to 80 N/mm^2

Step 6*: check for bearing pressure*

$$p_{max} = \frac{T_1}{W.r}$$

r = Radius of the drum

Step 7*: calculate the force to be applied at the end of the lever*

Table 11.4 Safe bearing pressure in band brakes ***(from PSG.7.98)***

Types of brake	***Materials of the rubbing, surfaces***			
	Steel band on C.I or steel drum	***Asbestos brake band on steel or C.I drum***	***Rolled,press formed and shaped friction material on metal drum***	***Wood on C.I drum***
Holding	***1.5***	***0.6***	***0.8***	***0.6***
Lowering	***1.0***	***0.3***	***0.4***	***0.4***

BAND AND BLOCK BRAKE

This arrangement is a combination of both the band and the block brakes, as shown. The band is lined with a number of wooden blocks, each of which is in contact with the rim of the brake drum. When the brake is applied, the blocks are pressed against the drum. The advantage of using wooden blocks is that they provide higher coefficient of friction and they can be easily and economically replaced after being worn out.

Let T_n = Tension in the band on tight side,

T_o = Tension in the band on slack side,

T_1 = Tension in band between the first and secon block,

T_2 = Tension in band between second and third block,

T_3 = Tension in band between third and fourth blocks.

n = Number of wooden blocks,

μ = Coefficient of friction between block and drum.

2θ = Angle subtended by each block at the drum centre.

R_N = Normal reaction on the block.

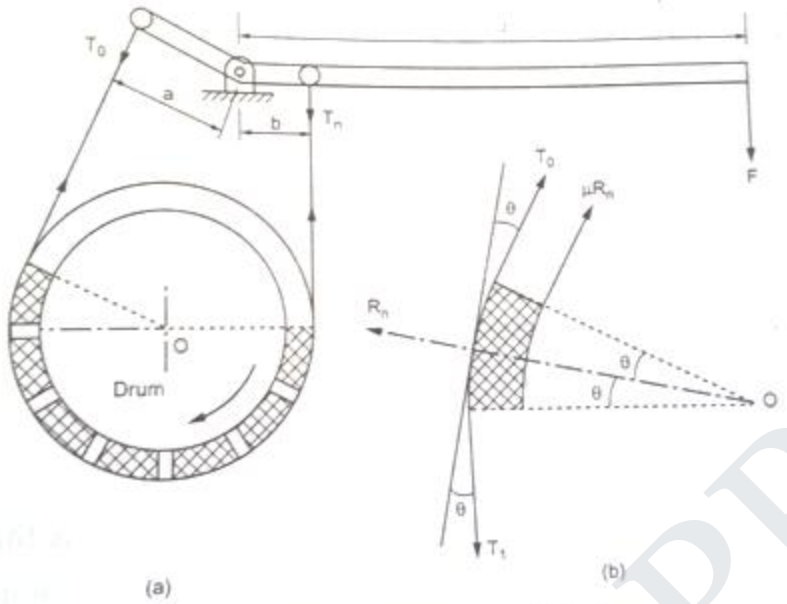

Fig. 11.19. Band and block brake

Resolving the forces radially, we get

$$(T_1 + T_0)\sin\theta = R_n$$

Resolving the forces tangentialy, we get

$$(T_1 - T_0)\cos\theta = \mu R_n$$

Dividing equation (i) by (ii), we get

$$\mu \tan\theta = \frac{T1 - T0}{T1 + T0}$$

$$\frac{1+\mu\tan\theta}{1-\mu\tan\theta} = \frac{1+\left(\frac{T1-T0}{T1+T0}\right)}{1-\left(\frac{T1-T0}{T1+T0}\right)} = \frac{2\,T_1}{2\,T_0} = \frac{T_1}{T_0}$$

or

$$\frac{T_1}{T_0} = \frac{1+\mu\tan\theta}{1-\mu\tan\theta}$$

Similarly, it can be proved for each of the blocks that

$$\frac{T_2}{T_1} = \frac{1+\mu\tan\theta}{1-\mu\tan\theta} \quad \text{and} \quad \frac{T_3}{T_2} = \frac{1+\mu\tan\theta}{1-\mu\tan\theta}$$

Therefore, $$\frac{T_1}{T_0} = \frac{T_2}{T_1} = \frac{T_3}{T_2} = \ldots\ldots = \frac{T_n}{T_{n-1}} = \frac{1+\mu\tan\theta}{1-\mu\tan\theta}$$

So the ratio of tensions for all 'n' block is given by

$$\frac{T_n}{T_0} = \frac{T_1}{T_0} \times \frac{T_2}{T_1} \times \frac{T_3}{T_2} \times \ldots \times \frac{T_n}{T_{n-1}} = \left[\frac{1+\mu\tan\theta}{1-\mu\tan\theta}\right]^n$$

Braking torque on the drum is given by

$$T_B = (T_1 - T_2)\, r$$

$$T_B = (T_1 - T_2)\left(\frac{d+2t}{2}\right)$$

DESIGN OF INTERNAL EXPANDING SHOE BRAKE

Moment of normal force, $M_N = \frac{1}{2} p_1.b.r.oo_1 [(\theta_1 - \theta_2) + \frac{1}{2}(\sin 2\theta_1 - \sin 2\theta_2)]$

Moment of frictional force, $M_F = \mu\, p_1.b.r. [r(\cos\theta_1 - \cos\theta_2) + \frac{oo_1}{4}(\cos 2\theta_2 - \cos 2\theta_1)]$

Braking torque in Block or shoe brake is given by

$T_B = \frac{\mu.F.l.r}{a-\mu c}$ [when the rotation of drum is clockwise]

$T_B = \frac{\mu.F.l.r}{a+\mu c}$ [when the rotation of drum is anticlockwise]

where T_B - Braking torque,

r = Radius of drum,
F = Force applied at lever end,
μ=Coefficient of friction, and

a, c & l = Dimensions of lever.

Equivalent coefficient of friction (μ^1) used when $2\theta > 40°$ is given by

$$\mu^1 = \frac{4\mu\sin\theta}{2\theta + \sin 2\theta}$$

where 2θ = Angle of contact

Braking torque in Double block or double shoe brake is given by

$$T_B = \mu r(R_{N1} + R_{N2})$$

where r = Radius of drum,
RN_1 & RN_2 = Normal reaction on the left & right hand side shoes

In **Band brake system**,

Tension ratio, $\frac{T_1}{T_2} = e^{\mu\theta}$ and

Braking torque, $T_B = (T_1 - T_2)r$

T_1 and T_2 = Tension in the band on tight and slack sides respectively
θ = Angle of lap

r = Radius of drum,

Force applied on the lever in Simple band brake is given by
(i) $F = T_1 \left(\frac{b}{a}\right)$. [For clockwise rotation of the drum]

$F = T_2 \left(\frac{b}{a}\right)$ [For anticlockwise rotation of the drum]

Tension ratio in Band and block brake is given by

$$\frac{T_n}{T_o} = \left[\frac{1+\mu\tan\theta}{1-\mu\tan\theta}\right]^n$$

where T_n = Tension in the band on tight side (maximum tension),
T_o = Tension in the band on slack side (minimum tension),
2θ - Angle sub tended by each block at the drum centre, and

n = Number of wooden blocks.

Actuating force on leading (or left hand) shoe. $F1 = \frac{M_N - M_F}{l}$

Actuating force on Trailing (or right hand) shoe. $F2 = \frac{M_N + M_F}{l}$

Energy considerations:
(i) Total energy absorbed by brake: $Er = \frac{1}{2}mv^2 + \frac{1}{2}I\omega^2 + Wx$

(ii) Heat generated in brakes: $H_g = \mu \times R_N \times V = \mu\, p\, .A\, .\, V$

(iii) Heat dissipated in brakes: $H_d = C \times A \times \Delta t = C \times A \times (t_s - t_a)$

Temperature rise: $\Delta t = \frac{E}{c.m}$

UNIT–V: CAM TYPES (PART - A)
1. What is meant by self energizing brake? (May/June 2014) (April/May 2015)
Soln. When the frictional force helps in applying the brake, then the brake is said to be **self-energised brake.**
2. What are the effects of temperature rise in clutches and Explain the function of clutch ? *(May/June 2016)*
Soln. i) Excessive surface temperature results in premature clutch failure. ii) May causes the individual plates to be welded together in metal clutches. iii) May cause excessive wear in non-metal clutches. **Functions** The clutch is a mechanical device which is used to connect or disconnect the source of power at the operator's will.
3. In cone clutches, semi cone angle should be greater than 12^0, why? (May/June 2012)
Soln. We know that the torque capacity is inversely proportional to sinα. The value ofα is less that the angle of friction(φ), the clutch has a tendency to grab, resulting in self-engagement. The self- engagement is not desirable because the clutch should engage or disengage only at the operations will.
4. List the characteristics of material used for brake lining? (Nov/Dec, 2010)
Soln. (i).A high and uniform coefficient of friction. (ii). The ability to withstand high temperatures, together with high heat dissipation capacity. (iii). Adequate mechanical and thermal strengths. (iv). High resistance to wear. (v). resistance against environmental conditions, such as moisture and oil.
5. Define base circle and pitch circle with respect to cam? (Nov/Dec, 2010)
Soln. **Base circle**: The smallest circle from the cam center through the cam profile curve **Pitch circle**: A circle from the cam center through the pitch point. The pitch circle radius is used to calculate a cam of minimum size for a given *pressure angle*.
6. What is the advantage of block brake with one short shoe? What is the remedy?(April/May 2010)
Soln. 1. Self- locking brake 2. Self-energizing brake

UNIT–V: CAM TYPES (PART - A)
7. List the advantages and applications multi plate clutches? (April/May 2015)
Soln. a multiplate clutch is used when large amount of torque is to be transmitted. In a multiplate clutch, the number of friction linings and the metal plates are increased which increases the capacity of the clutch to transmit torque, the multiplate clutch works in the same way as the single plate clutch by operating the clutch pedal. They are extensively used in motor car, machine tools, etc.
8. Under what condition of a clutch, uniform rate of wear assumption is more valid? (May/June 2009)
Soln In clutches, the value of normal pressure, axial load for the given clutch is limited by the rate of wear that can be tolerated in the brake linings. Moreover, the assumption of uniform rate wear gives a lower calculated clutch capacity than the assumption of uniform pressure. Hence clutches are usually designed on the basis of uniform wear.
9. Name four profiles normally used in cams. (Nov/Dec 2012)
Soln. Classify cam based on a shape? (i) wedge cam (ii) radial cams (iii) spiral cams (iv) drum cams (v) spherical cams
10. What is a self-locking brake? (Apr/May2011)
Soln. When the frictional force is sufficient enough to apply the brake with no external force, then the brake is said to be self-locking brake

UNIT I DESIGN OF FLEXIBLE ELEMENTS

Assignment Questions to be Solved by the Students in Unit -I

1. ***A flat belt is required to transmit 35 KW from a pulley of1.5 m effective diameter at 300 r.p.m the angle of lap is 165^c and μ =0.3. Determine, taking centrifugal tension into account, width of the belt required.it is given that the belt thickness is 9.5 mm, density of is 1.1 mg/m^3 and the related permissible working stress is 2.5 Mpa.***
2. ***A 2.5 KW of power is transmitted by an open belt drive the linear velocity of the belt is 2.5m/s. the angle of lap on the smaller pulley is 165^c. The coefficient of friction is 0.3. determine the effect on power transmission in the following cases:***
   Initial tension in the belt is increased by 8%,
   Initial tension in the belt is decreased by 8%,
   Angle of lap is increased by 8% by the use of an idler pulley, for the same speed and the tension on the tight side, and
   Coefficient of friction is increased by 8% by suitable dressing to the friction surface of the belt
   Also state which of the above methods suggested could be more effective?
3. ***A belt drive is required to transmit 12 KW from a motor running at 720 r.p.m the belt is 12 mm thick and has a mass density of 0.001 gm/mm^3. Permissible stress in the belt not to exceed 2.5 N/mm^2. Diameter of driving pulley is 250 mm whereas the speed of the drive pulley is 240 r.p.m. the two shafts are 1.25 m apart. Coefficient of friction is 0.25 determine the width of the belt.***
4. ***Centrifugal pump running at 340 r.p.m. is to be driven by a 100 KW motor running at 1440 r.p.m. the drive is to work for at least 20 hours every day. The center distance between the motor shaft and the pump shaft is 1200 mm. suggest a suitable multiple V- belt for this application. Also calculation the actual belt tension and stress induced.***
5. ***Power is transmitted between two shafts by a V-belt whose mass is 0.9 kg/m length. The maximum permissible tension in the V-belt is limits to 2.2 KN. The angle of lap is 170^c and the groove angle 45^c . If the coefficient of friction between the belt and pulleys is 0.17, find***
   (i) Velocity of the belt for maximum power, and
   (ii) Power transmitted at this velocity.
6. ***select a wire rope for a vertical mine hoist to lift 1500 tons of ore in 8 hours shift from a depth of 900 m. assume at two-compartment shaft with the hoisting skips in balance. Use a maximum velocity of 12 m/sec with acceleration and deceleration period of 15 sec each and a rest period of 10 sec for discharging and loading the skips. A hoisting skip weights approximately 0.6 of the capacity take E_r=0.84x10^5 n/mm^2***
7. ***A truck equipped with a 9.5 KW engine uses a roller chain as the final drive to the rear axle. The driving sprocket runs at 900 r.p.m. and the driven sprocket at 400 r.p.m. with a centre distance of approximately 600 mm. select the roller chain.***
8. ***The transporter of a heat treatment furnace is driven by a 4.5 KW, 1440 r.p.m. induction motor through a chain drive with a speed reduction ration of 2:4. The transmission is horizontal with bath type of lubrication. Rating is continuous with 3 shifts per day .design the complete chain drive***

9. ***A compress to be actuated from a 10 KW electric motor .the motor shaft is 970 r.p.m and the that of the compressor is to be 330 r.p.m. the compressor operating in two shifts. The minimum centre distance should be 100 mm. design a suitable chain drive.***
10. ***Find the width of the belt necessary to transmit 7.5 KW to a pulley of 300 mm diameter, if the pulley makes 1600 r.p.m and the coefficient of friction between the belt and the pulley is 0.22. assume the angle the of contact as 210^{c} and the maximum tension in the belt is not to exceed 8 n/mm with***

UNIT II SPUR GEARS AND PARALLEL AXIS HELICAL GEARS

Assignment Questions to be solved by the Students in Unit –II

1. ***Design a spur gear drive required to transmit 45 KW at a pinion speed of 800 r.p.m. the velocity ratio is 3.5:1. The teeth are 20° full depth involute with18 teeth on the pinion. Both the pinion and gear are made of steel with a maximum safe static stress of180 N/mm^2. Assume light shock conditions.***
2. ***A compressor running at 300 r.p.m. is driven by a 15 KW, 1200 r.p.m. motor through a $14\frac{1}{2}$° full depth spur gears. The centre distance is 375 mm. the motor pinion is to be of C 30 forged steel hardened and tempered, and the driven gear is to be of cast iron. Assuming medium shock condition, design the gear drive completely.***
3. ***A bronze spur pinion at 600 r.p.m. drivers a cast iron gear at a transmission ratio of 4:1. Allowable static stress for pinion and gear are 85 and 105 n/mm^2 respectively. The pinion has 22 standard 20° full depth involute teeth. The power transmitted is 32 KW. The surface endurance limit for the gear pair is 520 n/mm^2, modulus of elasticity of the pinion material is 1.2x10^5 N/mm^2. If the starting torque is 25% more than the mean torque, design the gear drive completely.***
4. ***In a spur gear drive for a stone crusher, the gears are made of C40 steel. The pinion is transmitting 30 KW at 1200 r.p.m. the gear ratio is 3. Gear is to work 8 hours per day, six days a week and for 3 years. Design the drive.***
5. ***Design a spur gear drive to transmit 22.5 KW at 900 r.p.m. speed reduction is 2.5. Materials for pinion and wheel are C15 steel and cast iron grade 30 respectively. Take pressure angle of 20^{c} and working life the gears as 10000 hrs.***
6. ***Design a helical gear to transmit 15 KW at 1400 r.p.m. to the folloeing specifications: speed reduction is 3; pressure angle is0020^{c}; helix angle is 15°; the material of both the gears is C45 steel. Allowable static stress 180 n/mm^2; surface endurance limit is 800 n/mm^2; young's modulus of material = 2x 10^5 N/mm^2.***
7. ***A compressor running at 360 r.p.m. is driven by a 140 KW, 1440 r.p.m. motor through a pair of 20° full depth helical gears having helix angle 25°.the centre distance is approximately 400 mm. the motor pinion is to be forged steel and the driven gear is to be cast steel. Assume medium shock conditions. Design the gear pair.***
8. ***A pair of 20^0 full depth involutes teeth 30^0 helical gears having a velocity ratio of 3.the pinion is made of steel with allowable static stress of 70 N/mm^2. the pinion transmits 40 KW at 1500 r.p.m. determine all the basic dimensions of the gear pair.***

Assume with of face as 3 time the normal pitch and tooth form factors as 0.154-$\frac{0.0912}{zv}$, where z_v is the equivalent number of teeth.

9. ***For intermittent duty of an elevator, two cylindrical gears have to transmit 12.5 KW at a pinion speed of 1200 r.p.m. design the gear pair for the following specifications: gear ratio 3.5, pressure angle 20°, involute full depth, helix angle 15°.gears are expected to work 6 hours a day for 10 years.***
10. ***A spiral wheel reduction gear, of ratio 3 to 2, is to be used on a machine, with the angle between the shafts 800. The approximate centre distance between the shafts is 125 mm. the normal pitch of the teeth is 10 mm and wheel diameters are equal. Find the number of teeth on each wheel, pitch circle diameter and spiral angles. Find the efficiency of the drive if the friction angle is $5^{0.}$***

UNIT III BEVEL, WORM AND CROSS HELICAL GEARS

Assignment Questions to be solved by the Students in Unit –III

1. ***A pair of bevel gears is to be used to transmit 10 KW from a pinion rotating at 420 r.p.m. to a gear mounted on a shaft which intersects the pinion shaft at an angle 70^0. Assuming that the pinion is to have an outside pitch diameter of 180 mm, a pressure angle of 20^0, a face width of 45 mm, and the gear shaft is to rotate at 140 r.p.m., determine (i) the pitch angle for the gears; (ii) the forces on the pinion and gear ; and (iii) the toque produced about the shaft axis***
2. ***Design a pair of bevel gears to transmit 10 KW and a pinion speed of 1440 r.p.m. required transmission ratio is 4. Material for gears is 15 Ni 2Cr 1 Mo 15/steel the tooth profiles of the gears are 20^0 composite from.***
3. ***A pair of 20^0 full depth involute teeth bevel gears connects two shafts at right angles having a velocity ratio 3.2:1. The gear is made of cast steel with an allowable static stress as $72N/mm^2$ and the pinion is made of steel having a static stress of $100N/mm^2$. The pinion transmits 40 KW at 840 r.p.m. find the module, face width and pitch diameter from the stand point of beam strength and check the design from the stand point of wear.***
4. ***Design a cast iron bevel gear drive for a pillar drilling machine to transmit 1875 W at 800 r.p.m. to a spindle at 400 r.p.m. the gear is to work for 40 hours per week for 3 years. Pressure angle is 20^0.***
5. ***Design as straight bevel drive between two shafts at right angles to each other. Speed of the pinion shaft is 360 r.p.m. and the speed of the gear wheel shaft is 120 r.p.m. pinion is of steel and wheel of cast iron. Each gear is expected to work 2 hours/day for 10 years. The drive transmits 9.37 KW.***
6. ***A pair of worm gears is designated as 2/54/10/5. Calculate: (i) the center distance; (ii) the speed reduction; (iii) the dimensions of the worm; (iv) the dimensions of worm wheel.***
7. ***A pair of worm gears is designated as 1/52/10/8. The worm transmits 800 W at 1000 r.p.m. and the normal pressure angle is 20^0. Determine the coefficient of friction and the efficiency of the worm gears. Also find the power lost in friction.***

8. ***A hardened steel worm rotates at 1440 r.p.m. and transmits 12 KW to a phosphor bronze gear. The speed of the worm wheel should be 60 ± 3% r.p.m. design the worm gear drive if an efficiency of at least 82 % is desired.***

9. ***A steel worm running at 240 r.p.m. receives 1.5 KW from its shaft. The speed reduction is 10:1. Design the drive so as to have an efficiency of 80%. Also determine the cooling area required, if the temperature rise is restricted to 45^0 C. take overall heat transfer coefficient as $10W/m^2\,^0C$.***
10. ***A double threaded worm drive has an axial pitch of 25mm and a pitch circle diameter of 70 mm. the torque on the worm gear shaft is 1400 N-m. The pitch circle diameter of the worm gear is 250 mm and the tooth pressure angle is 25^0. Find 1. Tangential force on the worm gear; 2. Torque on the worm shaft; 3. Separating force on the worm; and 4. Velocity ration. Take the coefficient of friction between the worm thread and gear teeth as 0.04.***

UNIT IV GEAR BOXES

Assignment Questions to be solved by the Students in Unit –IV

1. ***A nine speed gear box, used as a head stock gear box of a turret lathe is to provide a speed range of 180 r.p.m. using standard step ratio, draw the speed diagram ,and the kinematic layout. Also find and fix the number of teeth on all gears.***
2. ***A gear box is to be designed to provide 12 output speeds ranging from 160 to 2000 r.p.m. the input speed of motor is 100 r.p.m. choosing a standard speed ratio construct the speed diagram and kinematic arrangement***
3. ***A machine tool gear box is to have 12 speeds, with the output speeds ranging from 63 r.p.m. to 2800 r.pm. Draw the speed diagram for 2x2x3, 3x2x2, 3x4 and 4x3 schemes. Among these schemes which is better and why?***
4. ***Sketch the speed diagram and the kinematic layout for an 18 speeds gear box for the following data: Motor speed = 1440 r.p.m.; minimum output speed= 16 r.p.m. ; maximum output speed = 800 r.p.m. ; arrangement = 2x3x3.List the speed of the all the shaft when the output speed is 16 r.p.m..***
5. ***A 14 speed gear box is required to furnish output speeds in the range of 125 to 2500 r.p.m. draw the diagram and the kinematic arrangement.***
6. ***Design a 12 speed gears box for an all geared headstock of a lathe. Maximum and minimum speeds are 600 r.p.m. and 25 r.p.m. respectively. The drive is from an electrical motor giving 2.25 KW at 1440 r.p.m.***
7. ***Design a gear drive to give 18 speeds for a spindle of a milling machine. The drives is form an electric motor of 3.75 KW at 1440 r.p.m. maximum and minimum speeds of the spindle are to be around 650 and 35 r.p.m. respectively.***

UNIT V CAMS, CLUTCHES AND BRAKES

Assignment Questions to be solved by the Students in Unit –V

1. ***A automotive single plate clutch consists of two pair of contacting surfaces. The inner and outer radii of friction plate are 120 and 250 mm respectively. The coefficient of friction is 0.25 and the total axial force is 15 KN. Calculate the power transmitting capacity of the clutch plate at 500 r.p.m. using (i) uniform wear theory and (ii) uniform pressure theory***
2. ***Determine the maximum and minimum and average pressure in a plate clutch when the axial force is 5000 N. the outer and inner diameters of the friction surfaces are 2o mm and 100 mm respectively. Assume uniform wear.***

3. ***A friction clutch I used to rotate a machine from shaft rotating at a uniform speed of 250 r.p.m. the disc type clutch has of its sides effective, the coefficient of friction being 0.3. The outer and inner diameters of the friction plate are 200 mm and 120 mm respectively. Assuming uniform wear of the clutch, the intensity of pressure is not to exceed 100 KN/m^2. If the moment of inertia of the rotating parts of the machines is 6.5 Kg-m^2 , determine the time to attain the full speed by the machine and the energy lost in slipping of the clutch. What will be the intensity of pressure, if the condition of uniform pressure of the clutch is considered? Also determine the ratio of power transmitted with uniform wear to that with uniform pressure.***
4. ***A cone clutch with a semi- cone angle of 15° transmit 10 KW at 600 r.p.m. the normal pressure between the surface in contact is not to exceed 1000 KN/m^2. The width of the friction surface is half of the mean diameter. Assume μ =0.25.determine: (i) the outer and inner diameter of the plate and (ii) the axial force to engage the clutch.***
5. ***The diameter of the brake drum of a single block shown fig is 1 m .it sustains 240 N-m of torque at 400 r.p.m. the coefficient of friction is 0.32. determine the required force to be applied when the rotation of the drum is (a) clock wise, (b) counter clock wise, and angle of contact (i) 35° (ii) 100° . give that a=800 mm, b=150 mm and c = 25 mm. also find the new value of c for self locking of the brake.***

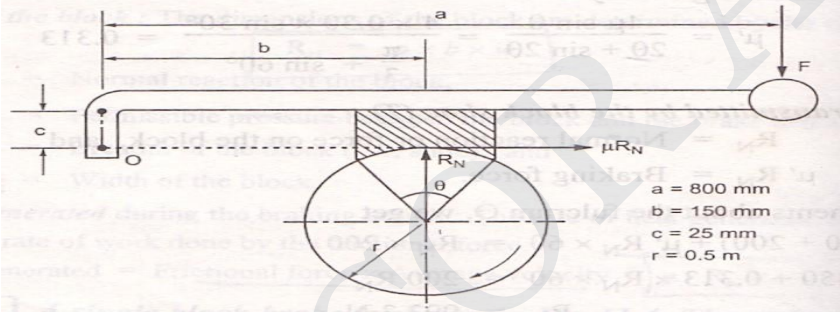

6. ***The layout of a double block brake is shown in fig. the brake is rated at 250 N-m at 650 r.p.m. the drum diameter is 250 mm. assuming coefficient of friction to be 0.3 and for condition of service a pv value of 1000 (kpa) m/s may be assume. Determine: (a) spring force S required setting the brake, and (ii) width of shoes. Which shoe will have greater rate of wear and what will be the ratio of rates of wear of the two shoes?***

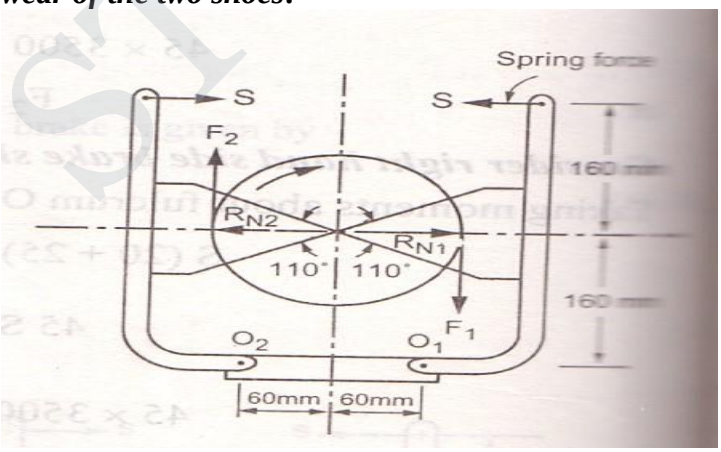

7. ***A simple band brake is operates by a lever of length 500 mm long. The brake drum has a diameter of 500 mm and the brake band embraces 5/8 of the circumference. One of the band is attached to the fulcrum of the lever while the other is attached to***

a pin on the lever 100 mm from the fulcrum. If the effort applied to the end of the lever is 2000 N and the coefficient of friction is 0.25, then design the simple band brake.

8. ***Design a differential band for a crane lifting a load of 50 KN through a rope wound round a barrel of 550 mm diameter, as shown in fig. the brake drum to be keyed to the same shaft is to be 650 mm in diameter and the angle of lap of the drum is 240°. Operating arms of the brake are 45 mm and 210 mm, as shown in fig .operating lever is 1.5 m long. Take μ = 0.25.***

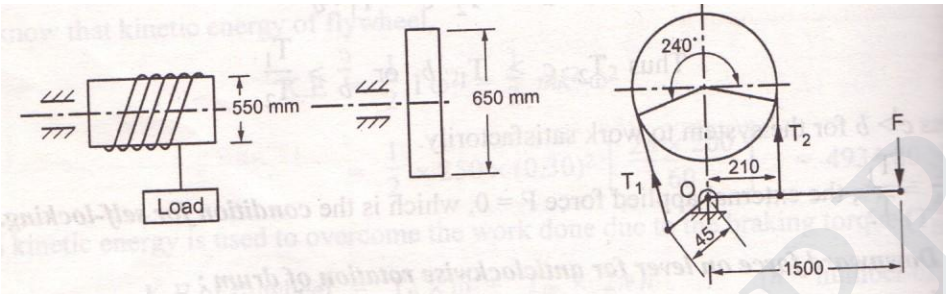

9. ***A band and block brake having 12 blocks each of which subtends an angle of 16° at the center, is applied to a rotating drum of diameter 600 mm. the blocks are 75 mm thick. The drum and flywheel mounted on the same shaft have a mass of 1800 Kg and have a combined radius of gyration of 600 mm. the two ends of the band are attached to pin on the opposite sides of the brake fulcrum at distance of 40 mm and 150 mm from the fulcrum. If a force of 250 N is applied at a distance of 900 mm from the fulcrum, find :(i) the maximum braking torque, (ii) the angular retardation of the drum, and (iii) the time taken by the system to be stationary from the rated speed of 300 r.p.m. take coefficient of friction between the blocks and the drum as 0.3***

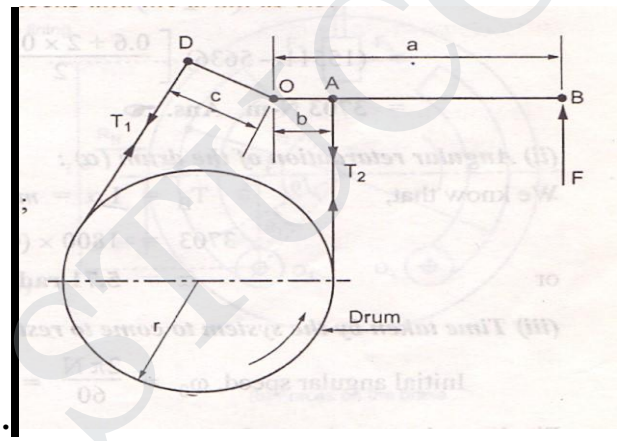

10. ***Fig shows the arrangement of two brakes shoes which act on the internal surface of cylindrical brake drum. The braking force F_1 and F_2 are applied as shown and the each shoe pivots on its fulcrum O_1 and O_2. The width of the brake lining is 35 mm and the intensity of pressure at any point A is 4 x 10^5 sin θ N/m^2, where θ is measured as shown from either pivot. The coefficient of friction is 0.40. Determine the braking torque and the magnitude of the forces F_1 and F_2.***

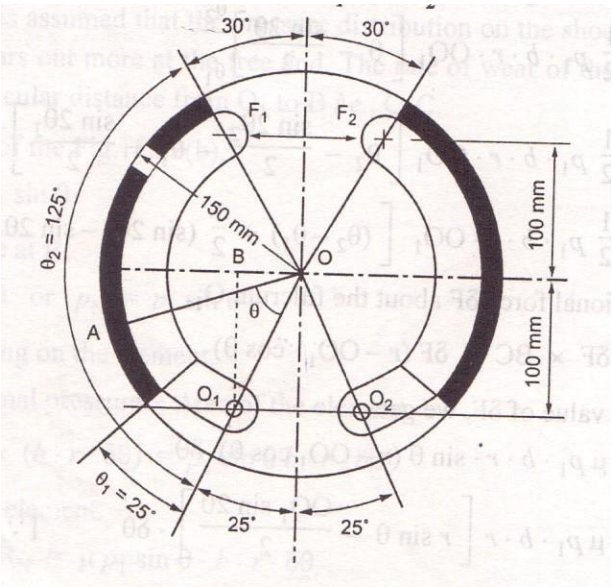

11. A cam drives a radial, knife-edged follower through a 1.5-in rise in 180˚ of cycloidal motion. Give the displacement at 60˚ and 100˚. If this cam is rotating at 200 rpm, what are the velocity (ds/dt) and the acceleration (d2s/dt2) at = 60˚?